MUNDOCLIMA®

MVD

OUTDOOR UNIT

Engineering Data

MAXI MVD V6R

V6R

www.mundoclima.com

CL23620 to CL23625

English

CONTENTS

Part 1 General Information 3

Part 2 Outdoor Unit Engineering Data 21

Part 3 System Design and Installation 119

Part 1

General Information

1 Indoor and Outdoor Unit Capacities 4

2 External Appearance..... 6

3 Outdoor Unit Combinations..... 10

4 Nomenclature..... 11

5 Combination Ratio..... 13

6 Selection Procedure..... 15

1 Indoor and Outdoor Unit Capacities

1.1 Indoor Units

1.1.1 VRF indoor units

Table 1-1.1: VRF indoor unit abbreviation codes

Abbreviation code	Type
Q1	One-way Cassette
Q2	Two-way Cassette
Q4C	Compact Four-way Cassette
Q4	Four-way Cassette
T2	Medium Static Pressure Duct

Abbreviation code	Type
T1	High Static Pressure Duct
G	Wall-mounted
DL	Ceiling & Floor
F	Floor Standing
Z	Console

Table 1-1.2: VRF indoor unit[1] capacity range

Capacity		Capacity index	Q1	Q2	Q4C	Q4	T2	T1	G	DL	F	Z
kW	HP											
1.8	0.6	18	18	—	—	—	—	—	—	—	—	—
2.2	0.8	22	22	22	22	—	22	—	22	—	22	22
2.8	1	28	28	28	28	28	28	—	28	—	28	28
3.6	1.25	36	36	36	36	36	36	—	36	36	36	36
4.5	1.6	45	45	45	45	45	45	—	45	45	45	45
5.6	2	56	56	56	—	56	56	—	56	56	56	—
7.1	2.5	71	71	71	—	71	71	71	71	71	71	—
8.0	3	80	—	—	—	80	80	80	80	80	80	—
9.0	3.2	90	—	—	—	90	90	90	90	90	—	—
10.0	3.6	100	—	—	—	100	—	—	—	—	—	—
11.2	4	112	—	—	—	112	112	112	—	112	—	—
14.0	5	140	—	—	—	140	140	140	—	140	—	—
16.0	6	160	—	—	—	160	160	160	—	160	—	—
20.0	7	200	—	—	—	—	—	200	—	—	—	—
25.0	9	250	—	—	—	—	—	250	—	—	—	—
28.0	10	280	—	—	—	—	—	280	—	—	—	—

Notes:

1. VR series outdoor units are compatible with the 2nd generation DC VRF indoor unit and 2nd generation AC VRF indoor units (which will be released soon).

1.1.2 Fresh air processing unit

Table 1-1.3: Fresh air processing unit capacity range

Capacity	12.5kW	14kW	20kW	25kW	28kW
Capacity index	125	140	200	250	280

Notes:

1. V6R series outdoor units are compatible with the 2nd generation DC fresh air processing unit.

1.2 Heat Recovery Ventilator

Table 1-1.4: Heat recovery ventilator capacity range

Airflow rate	200m³/h	300m³/h	400m³/h	500m³/h	800m³/h	1000m³/h	1500m³/h	2000m³/h

Notes:

1. V6R series outdoor units are compatible with the DC type heat recovery ventilator.

1.3 High Temperature Hydro Module

Table 1-1.5: High temperature hydro module capacity range

Capacity	14kW
Capacity index	140

1.4 Outdoor Units

Table 1-1.6: Outdoor unit capacity range

Capacity	Model Name	Combination Type
8HP	MVD-V6R252W/V2GN	/
10HP	MVD-V6R280W/V2GN	/
12HP	MVD-V6R335W/V2GN	/
14HP	MVD-V6R400W/V2GN	/
16HP	MVD-V6R450W/V2GN	/
18HP	MVD-V6R500W/V2GN	/
20HP	MVD-V6R560W/V2GN	10HP+10HP
22HP	MVD-V6R615W/V2GN	10HP+12HP
24HP	MVD-V6R680W/V2GN	10HP+14HP
26HP	MVD-V6R735W/V2GN	12HP+14HP
28HP	MVD-V6R785W/V2GN	12HP+16HP
30HP	MVD-V6R835W/V2GN	12HP+18HP
32HP	MVD-V6R835W/V2GN	16HP+16HP
34HP	MVD-V6R950W/V2GN	16HP+18HP
36HP	MVD-V6R1000W/V2GN	18HP+18HP
38HP	MVD-V6R1070W/V2GN	12HP+12HP+14HP
40HP	MVD-V6R1120W/V2GN	12HP+12HP+16HP
42HP	MVD-V6R1185W/V2GN	12HP+14HP+16HP
44HP	MVD-V6R1235W/V2GN	12HP+16HP+16HP
46HP	MVD-V6R1300W/V2GN	14HP+16HP+16HP
48HP	MVD-V6R1350W/V2GN	16HP+16HP+16HP
50HP	MVD-V6R1400W/V2GN	16HP+16HP+18HP
52HP	MVD-V6R1450W/V2GN	16HP+18HP+18HP
54HP	MVD-V6R1500W/V2GN	18HP+18HP+18HP

Notes:

1. The combinations of units shown in the table are factory-recommended. Other combinations of units are also possible.

2 External Appearance

2.1 Indoor Units

2.1.1 VRF indoor units

Table 1-2.1: VRF indoor unit appearance

Compact Four-way Cassette MVD-Q4CDN1 	Four-way Cassette MVD-Q4DN1
Medium Static Pressure Duct MVD-T2DN1 	High Static Pressure Duct MVD-T1DN1
Wall-mounted MVD-D GN1 	Ceiling & Floor MVD-DLDN1
Floor Standing MVD- F4DN1 	Console MVD-ZDN1

2.1.1 Fresh air processing unit

Table 1-2.2: Fresh air processing unit appearance

Fresh Air Processing Unit MVD-FADN1

2.2 Heat Recovery Ventilator

Table 1-2.3: Heat recovery ventilator appearance

Heat Recovery Ventilator

2.3 High Temperature Hydro Module

Table 1-2.4: High temperature Hydro module appearance

High Temperature Hydro Module
MVD-W140RN3

2.4 Outdoor Units

2.4.1 Single units

Table 1-2.5: Single outdoor unit appearance

8/10/12HP (with single fan)	14/16/18HP (with dual fan)

2.4.2 Combinations of units

Table 1-2.6: Combination outdoor unit appearance

20/22HP	24/26/28/30HP
32/34/36HP	**38/40HP**
42/44HP	**46/48/50/52/54HP**

2.5 Mode Selection Box

Table 1-2.7: MS box appearance

Model name	Appearance	Max. number of downstream indoor units
MS01/N1-D[1,2]		8
MS04/N1-D		20
MS06/N1-D		30
MS08/N1-D		40
MS10/N1-D		47
MS12/N1-D		47

Notes:

1. MS01 can be ceiling-suspended installed and wall-mounted installed.
2. Low temperature cooling operation and leakage detection function are available in MS01.

3 Outdoor Unit Combinations

Table 1-3.1: Outdoor unit combinations

System capacity		Number of units	Modules[1]						Outdoor branch joint kit[2]
kW	HP		8	10	12	14	16	18	
22.4	8	1	●						—
28.0	10	1		●					
33.5	12	1			●				
40.0	14	1				●			
45.0	16	1					●		
50.0	18	1						●	
56.0	20	2		●●					FQZHW-02SB1
61.5	22	2		●	●				
68.0	24	2		●		●			
73.5	26	2			●	●			
78.5	28	2			●		●		
83.5	30	2			●			●	
90.0	32	2					●●		
95.0	34	2					●	●	
100.0	36	2						●●	
107.0	38	3			●●	●			FQZHW-03SB1
112.0	40	3			●●		●		
118.5	42	3			●	●	●		
123.5	44	3			●		●●		
130.0	46	3				●	●●		
135.0	48	3					●●●		
140.0	50	3					●●	●	
145.0	52	3					●	●●	
150.0	54	3						●●●	

Notes:
1. The combinations of units shown in the table are factory-recommended. Other combinations of units are also possible.
2. For systems with two or more outdoor units, outdoor branch joints (sold separately) are required.

4 Nomenclature

4.1 Indoor Units

4.1.1 VRF indoor units

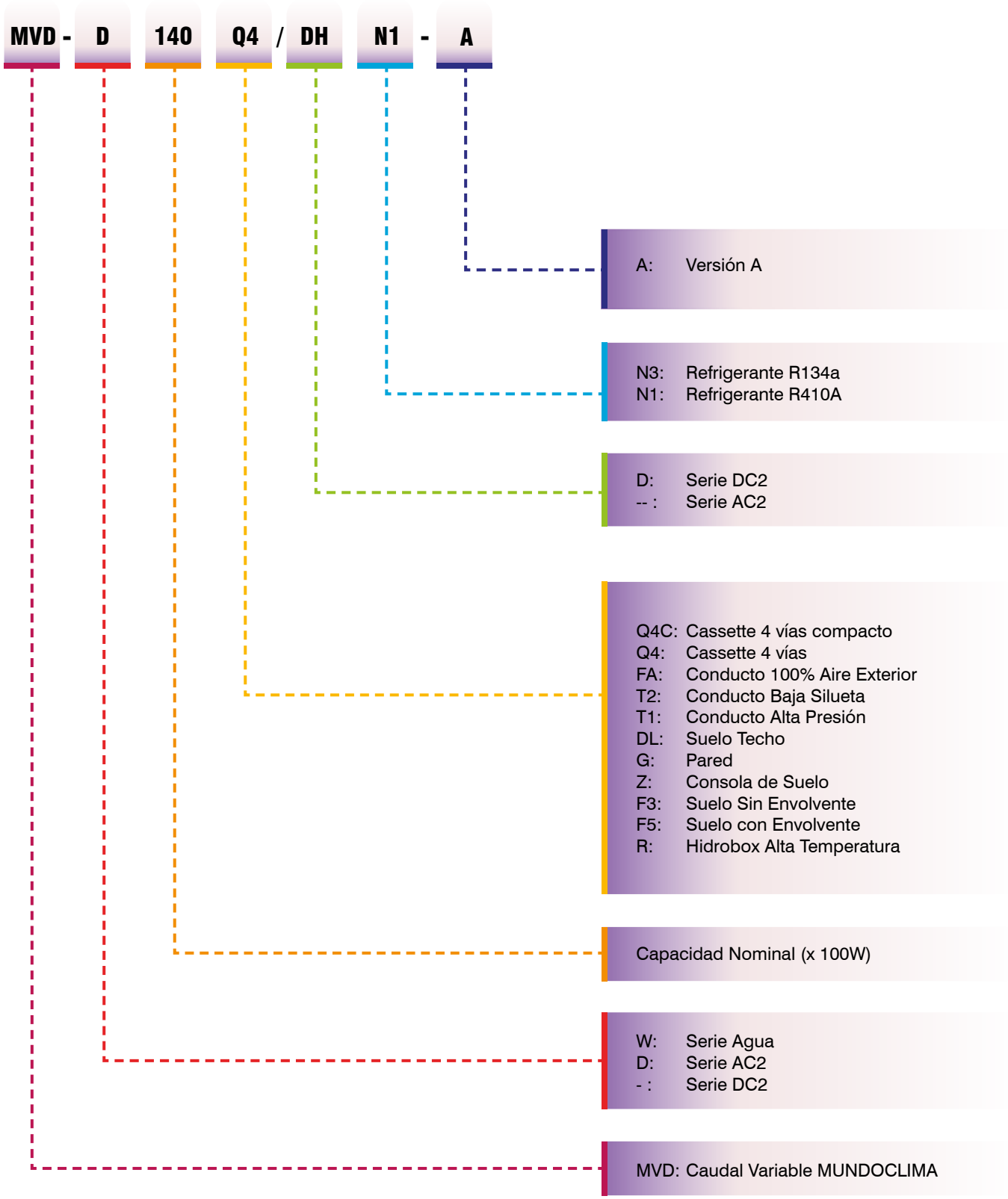

4.2 Outdoor Units

4.2.1 VRF outdoor units

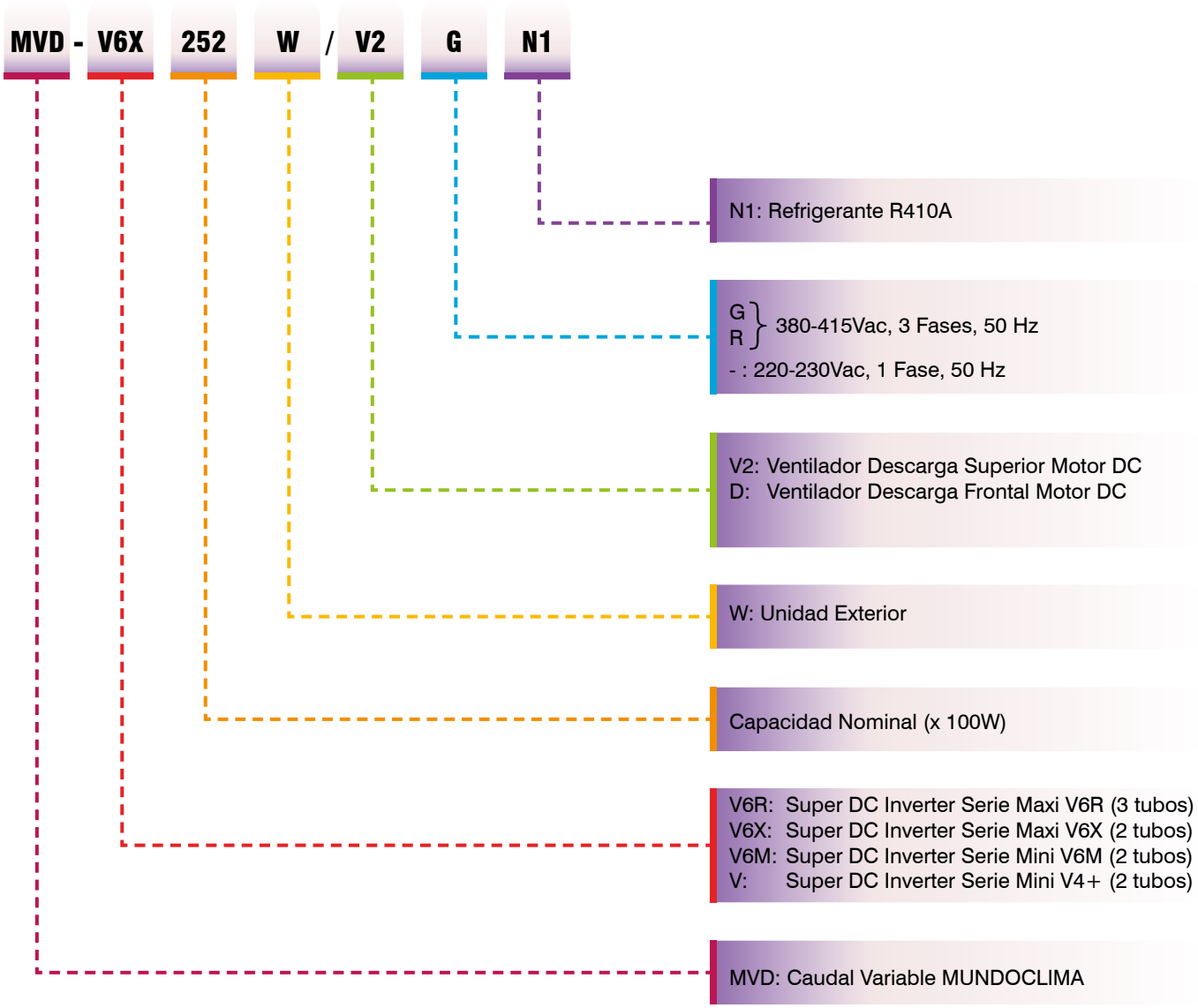

5 Combination Ratio

$$\text{Combination ratio} = \frac{\text{Sum of capacity indexes of the indoor units}}{\text{Capacity index of the outdoor units}}$$

Table 1-5.1: Indoor and outdoor unit combination ratio limitations

Type	Total combination ratio	Allowed combination ratio			
		VRF indoor units[1]	HT hydro module	AHU	Fresh air processing units
VRF indoor units only	50%~200% (Single) 50%~150% (2 units combination) 50%~130% (3 units combination)	50%~200% (Single) 50%~150% (2 units combination) 50%~130% (3 units combination)	/	/	/
VRF indoor units + HT hydro module units	50%~200%	50%~130%	0%~100%[2]	/	/
VRF indoor units + AHUs	50%~100%	50%~100%	/	0%~50%[3]	/
VRF indoor units + fresh air processing units	50%~100%	50%~100%	/	/	0%~30%[3]
Fresh air processing units only	50%~100%	/	/	/	50%~100%

Notes:

1. V6R series outdoor units are compatible with the 2nd generation DC VRF indoor unit and 2nd generation AC VRF indoor units (which will be released soon).
2. When HT hydro module units are installed together with VRF indoor units, the total capacity of HT hydro module units must not exceed 100% of the total capacity of the outdoor units and the combination ratio must not exceed 200%.
3. When AHUs are installed together with VRF indoor units, the total capacity of AHUs must not exceed 50% of the total capacity of the outdoor units and the combination ratio must not exceed 100%.
4. When fresh air processing units are installed together with VRF indoor units, the total capacity of the fresh air processing units must not exceed 30% of the total capacity of the outdoor units and the combination ratio must not exceed 100%.
5. HT hydro module units only and AHUs only are not allowed.

Table 1-5.2: Combinations of indoor and outdoor units

Outdoor unit capacity			Sum of capacity indexes				Maximum number of connected indoor units[1]
kW	HP	Capacity index	VRF indoor units only	VRF indoor units + HT hydro module	VRF indoor units + AHUs	VRF indoor units + fresh air processing units	
22.4	8	224	112 to 291.2 (448)	112 to 448	112 to 224	112 to 224	64
28	10	280	140 to 364 (560)	140 to 560	140 to 280	140 to 280	
33.5	12	335	167.5 to 435.5 (670)	167.5 to 670	167.5 to 335	167.5 to 335	
40	14	400	200 to 520 (800)	200 to 800	200 to 400	200 to 400	
45	16	450	225 to 585 (900)	225 to 900	225 to 450	225 to 450	
50	18	500	250 to 650 (1000)	250 to 1000	250 to 500	250 to 500	
56	20	560	280 to 728 (1120)	280 to 1120	280 to 560	280 to 560	
61.5	22	615	307.5 to 799.5 (922.5)	307.5 to 1230	307.5 to 615	307.5 to 615	
68	24	680	340 to 884 (1020)	340 to 1360	340 to 680	340 to 680	
73.5	26	735	367.5 to 955.5 (1102.5)	367.5 to 1470	367.5 to 735	367.5 to 735	
78.5	28	785	392.5 to 1020.5(1177.5)	392.5 to 1570	392.5 to 785	392.5 to 785	
83.5	30	835	417.5 to 1085.5(1252.5)	417.5 to 1670	417.5 to 835	417.5 to 835	
90	32	900	450 to 1170 (1350)	450 to 1800	450 to 900	450 to 900	
95	34	950	475 to 1235 (1425)	475 to 1900	475 to 950	475 to 950	
100	36	1000	500 to 1300 (1500)	500 to 2000	500 to 1000	500 to 1000	
107	38	1070	535 to 1391 (1605)	535 to 2140	535 to 1070	535 to 1070	
112	40	1120	560 to 1456 (1680)	560 to 2240	560 to 1120	560 to 1120	
118.5	42	1185	592.5 to 1540.5 (1540.5)	592.5 to 2370	592.5 to 1185	592.5 to 1185	
123.5	44	1235	617.5 to 1605.5(1605.5)	617.5 to 2470	617.5 to 1235	617.5 to 1235	
130	46	1300	650 to 1690 (1690)	650 to 2600	650 to 1300	650 to 1300	
135	48	1350	675 to 1755 (1755)	675 to 2700	675 to 1350	675 to 1350	
140	50	1400	700 to 1820 (1820)	700 to 2800	700 to 1400	700 to 1400	
145	52	1450	725 to 1885 (1885)	725 to 2900	725 to 1450	725 to 1450	
150	54	1500	750 to 1950 (1950)	750 to 3000	750 to 1500	750 to 1500	

Notes:

1. The maximum number of connected indoor units depend upon indoor unit type and total combination ratio.
2. Values inside brackets are based on connection of indoor units rated at maximum capacity, 200% for single outdoor units, 150% for 2 unit's combination outdoor units, and 130% for 3 unit's combination outdoor units.

6 Selection Procedure

6.1 Procedure

Step 1: Establish design conditions

Design temperature and humidity (indoor and outdoor)
Required heat load of each room
System peak load
Piping length, level differences
Indoor unit specifications (type and quantity)

Step 2: Select indoor units

Decide indoor unit safety factor

Select indoor unit models ensuring that:
Indoor unit capacity corrected for indoor air temperature WB[1] ≥ Required heat load × Indoor unit safety factor

Step 3: Select outdoor units

Determine required total heat load on outdoor units

Use the sum of the peak load of each room

Use the system peak load

Provisionally select outdoor unit capacity based on combination ratio limitations

Confirm that the number of indoor units connected to the outdoor units is within limitation

Correct cooling and heating capacities of the outdoor units for the following items:
Outdoor air temperature / Indoor air temperature WB / Combination ratio / Piping length, level difference / Piping heat loss / Frost accumulation (for heating capacity only)

Is corrected outdoor unit capacity ≥ Required total heat load on outdoor units?

No

Yes

VRF system selection is complete

Notes:

1. If the indoor design temperature falls between two temperatures listed in the indoor unit's capacity table, calculate the corrected capacity by interpolation. If the indoor unit selection is to be based on total heat load and sensible heat load, select indoor units which satisfy not only the total heat load requirements of each room but also the sensible heat load requirements of each room. As with total heat capacity, the sensible heat capacity of indoor units should be corrected for indoor temperature, interpolating where necessary. For the indoor unit capacity tables, refer to the indoor unit technical manuals.

6.2 Example

The following is a selection example based on total heat load for cooling. All the indoor units are VRF indoor unit.

Figure 1-6.1: Room plan

<table>
<tr><td rowspan="3">Room A</td><td>Room F</td><td>Room E</td><td rowspan="3">Room D</td></tr>
<tr><td colspan="2"></td></tr>
<tr><td>Room B</td><td>Room C</td></tr>
</table>

Step 1: Establish design conditions

- Indoor air temperature 25°C DB, 18°C WB; outdoor air temperature 33°C DB.
- Determine peak load of each room and system peak load. As shown in Table 1-6.1, the system peak load is 34kW.

Table 1-6.1: Required heat load of each room (kW)

Time	Room A	Room B	Room C	Room D	Room E	Room F	Total
9:00	4.8	3.0	3.0	9.0	2.9	2.9	25.6
12:00	6.6	5.1	5.1	6.8	4.0	4.0	31.6
14:00	9.0	4.9	4.9	6.8	4.2	4.2	34
16:00	10.6	3.9	3.9	6.2	3.8	3.8	32.2

- The maximum piping lengths and level differences in this example are as given in Figure 1-6.2.

Figure 1-6.2: System diagram

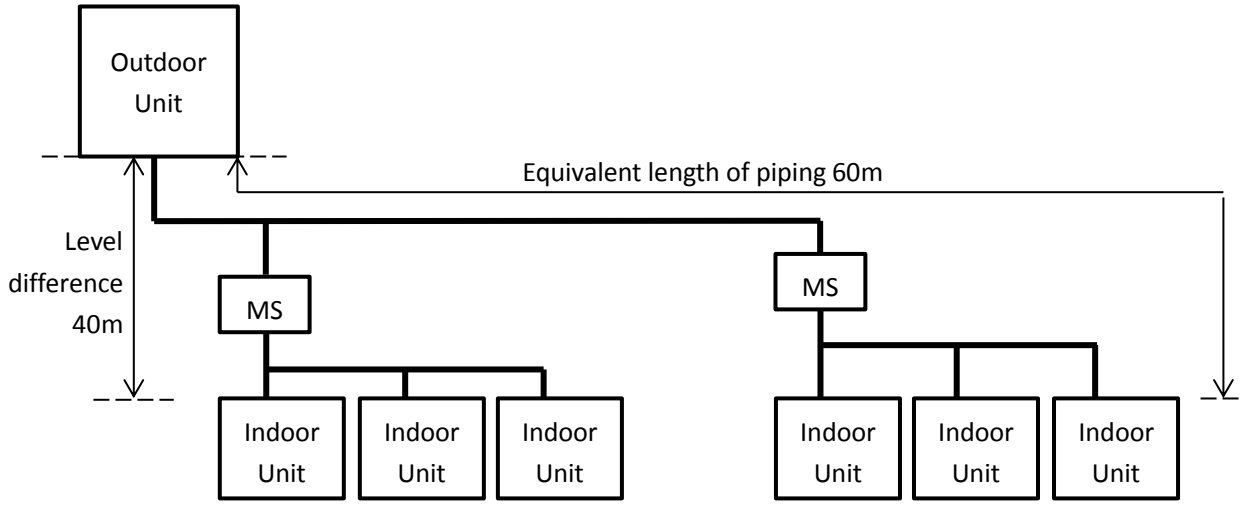

- Indoor unit type for all rooms: Medium Static Pressure Duct (T2).

Step 2: Select indoor units

- In this example, a safety factor is not used (i.e. the safety factor is 1).
- Select indoor unit models using the medium static pressure duct cooling capacity table. Each indoor unit's corrected capacity needs to be greater than or equal to the peak load of the relevant room. The selected indoor units are shown in Table 1-6.3.

Table 1-6.2: Extract from medium static pressure duct (T2) cooling capacity table

Model	Capacity index	Indoor air temperature													
		14°C WB		16°C WB		18°C WB		19°C WB		20°C WB		22°C WB		24°C WB	
		20°C DB		23°C DB		26°C DB		27°C DB		28°C DB		30°C DB		32°C DB	
		TC	SHC	TC	SHC	TC	SHC	TC	SHC	TC	SHC	TC	SHC	TC	SHC
T2	22	1.5	1.4	1.8	1.5	2.1	1.6	2.2	1.6	2.3	1.7	2.4	1.5	2.4	1.5
	28	1.9	1.7	2.3	1.9	2.6	2.1	2.8	2.1	3.0	2.1	3.1	2.0	3.1	1.9
	36	2.5	2.1	2.9	2.3	3.4	2.5	3.6	2.6	3.8	2.7	4.2	2.8	3.9	2.3
	45	3.1	2.6	3.7	2.8	4.2	3.1	4.5	3.2	4.8	3.2	4.9	3.1	5.1	2.9
	56	3.9	3.0	4.6	3.3	5.3	3.6	5.6	3.7	5.9	3.8	6.2	3.7	6.2	3.4
	71	4.9	3.9	5.8	4.3	6.7	4.7	7.1	4.9	7.5	4.8	7.8	4.6	7.8	4.3
	80	5.5	4.4	6.6	4.9	7.5	5.3	8.0	5.5	8.4	5.5	8.8	5.2	8.8	4.8
	90	6.2	5.3	7.3	5.8	8.4	6.3	9.0	6.4	9.6	6.5	9.9	6.1	9.9	5.7
	112	7.7	6.4	9.1	7.1	10.5	7.7	11.2	7.8	11.9	8.1	12.5	7.8	12.5	7.4
	140	9.7	7.8	11.3	8.6	13.2	9.6	14.0	9.8	14.8	9.8	15.7	9.7	15.4	8.8

Abbreviations:
TC: Total capacity (kW); SHC: Sensible heat capacity (kW)

Table 1-6.3: Selected indoor units

	Room A	Room B	Room C
Peak heat load (kW)	10.6	5.1	5.1
Selected indoor unit	MVD-140T2DN1	MVD-56T2DN1	MVD-56T2DN1
Corrected TC (kW)	13.2	5.3	5.3
	Room D	**Room E**	**Room F**
Peak heat load (kW)	9.0	4.2	4.2
Selected indoor unit	MVD-112T2DN1	MVD-45T2DN1	MVD-45T2DN1
Corrected TC (kW)	10.5	4.2	4.2

Step 3: Select outdoor units

- Determine the required total heat load from the indoor units to the outdoor units based on either the sum of the peak loads of each room or the system peak load. In this example, it is determined based on the system peak load. Therefore, the required heat load is 34kW.
- Provisionally select outdoor units using the sum of the capacity indexes (CIs) of the selected indoor units (as shown in Table 1-6.4), ensuring that the combination ratio is between 50% and 130%. Refer to Table 1-6.5. As the sum of CIs of the indoor units is 454, outdoor units from 14HP to 32HP are potentially suitable. Start from the smallest, which is the 14HP unit.

Table 1-6.4: Sum of indoor unit capacity indexes

Model	Capacity Index	No. of units
MVD-140T2DN1	140	1
MVD-112T2DN1	112	1
MVD-56T2DN1	56	2
MVD-45T2DN1	45	2

Sum of CIs	**454**

Table 1-6.5: Extract from Table 1-5.2 Combinations of Indoor and outdoor units

Outdoor unit capacity			Sum of capacity indexes				Maximum number of connected indoor units
kW	HP	Capacity index	VRF indoor units only	VRF indoor units + HT hydro module	VRF indoor units + AHUs	VRF indoor units + fresh air processing units	
28	10	280	140 to 364 (560)	140 to 560	140 to 280	140 to 280	64
33.5	12	335	167.5 to 435.5 (670)	167.5 to 670	167.5 to 335	167.5 to 335	
40	14	400	200 to 520 (800)	200 to 800	200 to 400	200 to 400	
45	16	450	225 to 585 (900)	225 to 900	225 to 450	225 to 450	
50	18	500	250 to 650 (1000)	250 to 1000	250 to 500	250 to 500	
56	20	560	280 to 728 (1120)	280 to 1120	280 to 560	280 to 560	
61.5	22	615	307.5 to 799.5 (922.5)	307.5 to 1230	307.5 to 615	307.5 to 615	
68	24	680	340 to 884 (1020)	340 to 1360	340 to 680	340 to 680	
73.5	26	735	367.5 to 955.5 (1102.5)	367.5 to 1470	367.5 to 735	367.5 to 735	
78.5	28	785	392.5 to 1020.5(1177.5)	392.5 to 1570	392.5 to 785	392.5 to 785	
83.5	30	835	417.5 to 1085.5(1252.5)	417.5 to 1670	417.5 to 835	417.5 to 835	
90	32	900	450 to 1170 (1350)	450 to 1800	450 to 900	450 to 900	

- The number of connected indoor units is 6 and the maximum number of connected indoor units on the 14HP outdoor unit is 28, so the number of connected indoor units is within the limitation.
- Calculate the corrected capacity of the outdoor units:
  a) The sum of the indoor unit CIs is 454 and the CI of the 14HP outdoor unit (MVD-V6R400W/V2GN1) is 400, so the combination ratio is 454 / 400 = 113.5%.
  b) Using the outdoor units' cooling capacity table, interpolate to obtain the capacity ("B") corrected for outdoor air temperature, indoor air temperature, and combination ratio. Refer to Tables 1-6.6 and 1-6.7.

Table 1-6.6: Extract from Table 2-9.4 MVD-V6R400W/V2GN1 cooling capacity

CR	Outdoor air temp. (°C DB)	Indoor air temp. (°C DB / °C WB)	
		25.8 / 18.0	
		TC	PI
		kW	kW
120%	31	48.00	11.02
	33	45.73	10.99
	35	44.05	11.00
110%	31	40.62	8.74
	33	40.62	9.38
	35	40.62	10.17

Table 1-6.7: Cooling capacity calculated by interpolation

CR	Outdoor air temp. (°C DB)	Indoor air temp. (°C DB / °C WB)	
		25.8 / 18.0	
		TC	PI
		kW	kW
120%			
	33	45.73	10.99
	B = 41.2[1]		
110%	33	40.62	9.38

Notes:
1. 40.62 + (45.73 – 40.62) × (113.5 – 110) / (120 – 110) = 41.2.

c) Find the correction factor for piping length and level difference ("K1")

Figure 1-6.3: V6R rate of change in cooling capacity

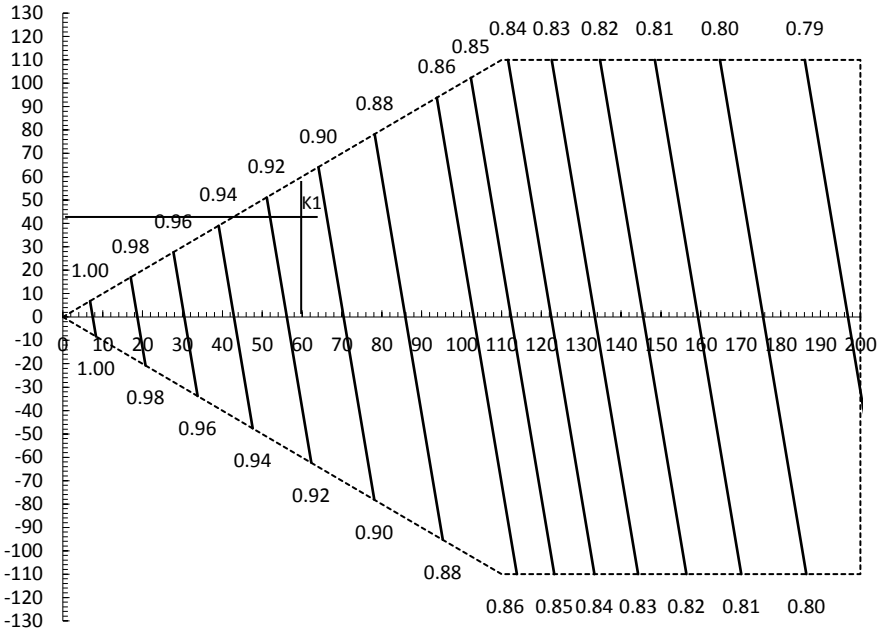

Notes:

1. The horizontal axis shows equivalent length of piping between farthest indoor unit and first outdoor branch joint; the vertical axis shows the largest level difference between indoor unit and outdoor unit. For level differences, positive values indicate that the outdoor unit is above the indoor unit, negative values indicate that the outdoor unit is below the indoor unit.

d) Calculate the corrected capacity of MVD-V6R560W/V2GN1 ("C") by using K1:

$$C = B \times K1 = 41.2 \times 0.91 = 37.5kW$$

- The corrected capacity 37.5kW is larger than required total heat load 34kW, so selection is complete. (In the event that the corrected capacity is lower than the required total heat load, Step 3 should be repeated from the point where the outdoor unit capacity is provisionally selected.)

Part 2

Outdoor Unit

Engineering Data

1 Specifications 22

2 Dimensions 32

3 Center of Gravity 38

4 Installation Space Requirements 39

5 Piping Diagrams 42

6 Wiring Diagrams 45

7 Electrical Characteristics 49

8 Functional Components and Safety Devices 50

9 Capacity Tables 51

10 Operating Limits 101

11 Sound Levels 102

12 Accessories 106

1 Specifications

1.1 Outdoor Units

8-12HP

Table 2-1.1: 8-12HP specifications

HP			8	10	12
Model name			MVD-V6R252W/V2GN1	MVD-V6R280W/V2GN1	MVD-V6R335W/V2GN1
Power supply		V/N/Hz	380-415/3/50		
Cooling[1]	Capacity	kW	22.4	28	33.5
	Power input	kW	5.25	7.18	8.64
	EER		4.27	3.90	3.88
Heating[2](Rated)	Capacity	kW	22.4	28	33.5
	Power input	kW	3.96	5.46	6.57
	COP		5.66	5.13	5.10
Heating[2](Max)	Capacity	kW	25	31.5	37.5
	Power input	kW	4.69	7.12	9.48
	COP		5.33	4.43	3.95
Connected indoor unit	Total capacity		50-200% of outdoor unit capacity[3]		
	Maximum quantity		64	64	64
Compressor	Type		DC inverter		
	Quantity		1		
	Oil type		FV68H		
	Start-up method		Soft start		
Fan	Type		Propeller		
	Motor type		DC		
	Quantity		1		
	Motor output	kW	0.92	0.92	0.92
	Static pressure	Pa	0,20,40,60,80(Selectable)		
	Air flow rate	m^3/h	9000	9500	10000
	Drive type		Direct		
Refrigerant	Type		R410A		
	Factory charge	kg	8	8	8
Pipe connections[4]	Liquid pipe	mm	Φ12.7	Φ12.7	Φ12.7
	Low pressure gas pipe	mm	Φ25.4	Φ25.4	Φ25.4
	High pressure gas pipe	mm	Φ19.1	Φ19.1	Φ19.1
Sound pressure level[5]		dB(A)	58	58	60
Sound power level[5]		dB(A)	78	78	81
Net dimensions (W×H×D)		mm	990×1635×790	990×1635×790	990×1635×790
Packed dimensions (W×H×D)		mm	1090×1805×860	1090×1805×860	1090×1805×860
Net weight		kg	232	232	232
Gross weight		kg	248	248	248
Ambient temp. operation range	Cooling[6]	°C(DB)	-15 ~ 52		
	Heating	°C(WB/DB)	-25 ~ 19/-25~27		
	Domestic hot water	°C(DB)	-20 ~ 43		

Notes:
1. Indoor air temperature 27°C DB, 19°C WB; outdoor air temperature 35°C DB; equivalent refrigerant piping length 7.5m with zero level difference.
2. Indoor air temperature 20°C DB; outdoor air temperature 7°C DB, 6°C WB; equivalent refrigerant piping length 7.5m with zero level difference.
3. Refer to table 1-5.1: Indoor and outdoor unit combination ratio limitations in Part 1.
4. Diameters given are those of the unit's stop valve.
5. Sound pressure level is measured at a position 1m in front of the unit and 1.3m above the floor in a semi-anechoic chamber.
6. -15°C to -5°C low temperature cooling operation is just available for MS01.

16-18HP

Table 2-1.2: 16-18HP specifications

HP			14	16	18
Model name			MVD-V6R400W/V2GN1	MVD-V6R450W/V2GN1	MVD-V6R500W/V2GN1
Power supply		V/N/Hz	380-415/3/50		
Cooling[1]	Capacity	kW	40	45	50
	Power input	kW	9.83	12.00	13.81
	EER		4.07	3.75	3.62
Heating[2](Rated)	Capacity	kW	40	45	50
	Power input	kW	8.26	9.78	11.90
	COP		4.84	4.60	4.20
Heating[2](Max)	Capacity	kW	45	50	56
	Power input	kW	9.78	12.26	14.77
	COP		4.60	4.08	3.79
Connected indoor unit	Total capacity		50-200% of outdoor unit capacity[3]		
	Maximum quantity		64	64	64
Compressor	Type		DC inverter		
	Quantity		1		
	Oil type		FV68H		
	Start-up method		Soft start		
Fan	Type		Propeller		
	Motor type		DC		
	Quantity		2		
	Motor output	kW	0.92×2	0.92×2	0.92×2
	Static pressure	Pa	0,20,40,60,80(Selectable)		
	Air flow rate	m^3/h	14000	14900	15800
	Drive type		Direct		
Refrigerant	Type		R410A		
	Factory charge	kg	10	10	10
Pipe connections[4]	Liquid pipe	mm	Φ15.9	Φ15.9	Φ15.9
	Low pressure gas pipe	mm	Φ28.6	Φ28.6	Φ28.6
	High pressure gas pipe	mm	Φ22.2	Φ22.2	Φ22.2
Sound pressure level[5]		dB(A)	61	64	65
Sound power level[5]		dB(A)	81	88	88
Net dimensions (W×H×D)		mm	1340×1635×825	1340×1635×825	1340×1635×825
Packed dimensions (W×H×D)		mm	1405×1805×910	1405×1805×910	1405×1805×910
Net weight		kg	300	300	300
Gross weight		kg	325	325	325
Ambient temp. operation range	Cooling[6]	°C(DB)	-15 ~ 52		
	Heating	°C(WB/DB)	-25 ~ 19/-25~27		
	Domestic hot water	°C(DB)	-20 ~ 43		

Notes:

1. Indoor air temperature 27°C DB, 19°C WB; outdoor air temperature 35°C DB; equivalent refrigerant piping length 7.5m with zero level difference.
2. Indoor air temperature 20°C DB; outdoor air temperature 7°C DB, 6°C WB; equivalent refrigerant piping length 7.5m with zero level difference.
3. Refer to table 1-5.1: Indoor and outdoor unit combination ratio limitations in Part 1.
4. Diameters given are those of the unit's stop valve.
5. Sound pressure level is measured at a position 1m in front of the unit and 1.3m above the floor in a semi-anechoic chamber.
6. -15°C to -5°C low temperature cooling operation is just available for MS01.

20-24HP

Table 2-1.3: 20-24HP specifications

HP			20	22	24
Model name			MVD-V6R560W/V2GN1	MVD-V6R615W/V2GN1	MVD-V6R680W/V2GN1
Combination type			10HP+10HP	10HP+12HP	10HP+14HP
Power supply		V/N/Hz	380-415/3/50		
Cooling[1]	Capacity	kW	56	61.5	68
	Power input	kW	14.36	15.82	17.01
	EER		3.90	3.89	4.00
Heating[2](Rated)	Capacity	kW	56	61.5	68
	Power input	kW	10.92	12.03	13.72
	COP		5.13	5.11	4.96
Heating[2](Max)	Capacity	kW	63	69	76.5
	Power input	kW	14.24	16.60	16.90
	COP		4.43	4.16	4.53
Connected indoor unit	Total capacity		50-200% of outdoor unit capacity[3]		
	Maximum quantity		64	64	64
Compressor	Type		DC inverter		
	Quantity		2		
	Oil type		FV68H		
	Start-up method		Soft start		
Fan	Type		Propeller		
	Motor type		DC		
	Quantity		2	2	3
	Motor output	kW	0.92×2	0.92×2	0.92×3
	Static pressure	Pa	0,20,40,60,80(Selectable)		
	Air flow rate	m^3/h	19000	19500	23500
	Drive type		Direct		
Refrigerant	Type		R410A		
	Factory charge	kg	16	16	18
Pipe connections[4]	Liquid pipe	mm	Φ15.9	Φ15.9	Φ15.9
	Low pressure gas	mm	Φ28.6	Φ28.6	Φ34.9
	High pressure gas	mm	Φ28.6	Φ28.6	Φ28.6
Sound pressure level[5]		dB(A)	61	62	63
Sound power level[5]		dB(A)	81	83	83
Net dimensions (W×H×D)		mm	(990×1635×790)×2	(990×1635×790)×2	990×1635×790+
Packed dimensions (W×H×D)		mm	(1090×1805×860)×2	(1090×1805×860)×2	1090×1805×860+
Net weight		kg	232×2	232×2	232+300
Gross weight		kg	248×2	248×2	248+325
Ambient temp. operation range	Cooling[6]	°C(DB)	-15 ~ 52		
	Heating	°C(WB/DB)	-25 ~ 19/-25~27		
	Domestic hot water	°C(DB)	-20 ~ 43		

Notes:

1. Indoor air temperature 27°C DB, 19°C WB; outdoor air temperature 35°C DB; equivalent refrigerant piping length 7.5m with zero level difference.
2. Indoor air temperature 20°C DB; outdoor air temperature 7°C DB, 6°C WB; equivalent refrigerant piping length 7.5m with zero level difference.
3. Refer to table 1-5.1: Indoor and outdoor unit combination ratio limitations in Part 1.
4. Diameters given are those for the pipe connecting the outdoor unit combination to the first indoor branch joint for systems with total equivalent liquid piping lengths of less than 90m. For systems with total equivalent liquid piping lengths of 90m or longer, please refer to Part 3 “System Design and Installation” for connection piping diameters.
5. Sound pressure level is measured at a position 1m in front of the unit and 1.3m above the floor in a semi-anechoic chamber.
6. -15°C to -5°C low temperature cooling operation is just available for MS01.

26-30HP

Table 2-1.4: 26-30HP specifications

HP			26	28	30
Model name			MVD-V6R735W/V2GN1	MVD-V6R785W/V2GN1	MVD-V6R835W/V2GN1
Combination type			12HP+14HP	12HP+16HP	12HP+18HP
Power supply		V/N/Hz	380-415/3/50		
Cooling[1]	Capacity	kW	73.5	78.5	83.5
	Power input	kW	18.46	20.64	22.45
	EER		3.98	3.80	3.72
Heating[2](Rated)	Capacity	kW	73.5	78.5	83.5
	Power input	kW	14.83	16.35	18.47
	COP		4.96	4.80	4.52
Heating[2](Max)	Capacity	kW	82.5	87.5	93.5
	Power input	kW	19.27	21.74	24.25
	COP		4.28	4.02	3.86
Connected indoor unit	Total capacity		50-200% of outdoor unit capacity[3]		
	Maximum quantity		64	64	64
Compressor	Type		DC inverter		
	Quantity		2		
	Oil type		FV68H		
	Start-up method		Soft start		
Fan	Type		Propeller		
	Motor type		DC		
	Quantity		3		
	Motor output	kW	0.92×3	0.92×3	0.92×3
	Static pressure	Pa	0,20,40,60,80(Selectable)		
	Air flow rate	m^3/h	24000	24900	25800
	Drive type		Direct		
Refrigerant	Type		R410A		
	Factory charge	kg	18	18	18
Pipe connections[4]	Liquid pipe	mm	Φ19.1	Φ19.1	Φ19.1
	Low pressure gas	mm	Φ34.9	Φ34.9	Φ34.9
	High pressure gas	mm	Φ28.6	Φ28.6	Φ28.6
Sound pressure level[5]		dB(A)	64	65	66
Sound power level[5]		dB(A)	84	89	89
Net dimensions (W×H×D)		mm	990×1635×790+ 1340×1635×825	990×1635×790+ 1340×1635×825	990×1635×790+ 1340×1635×825
Packed dimensions (W×H×D)		mm	1090×1805×860+ 1405×1805×910	1090×1805×860+ 1405×1805×910	1090×1805×860+ 1405×1805×910
Net weight		kg	232+300	232+300	232+300
Gross weight		kg	248+325	248+325	248+325
Ambient temp. operation range	Cooling[6]	°C(DB)	-15 ~ 52		
	Heating	°C(WB/DB)	-25 ~ 19/-25~27		
	Domestic hot water	°C(DB)	-20 ~ 43		

Notes:

1. Indoor air temperature 27°C DB, 19°C WB; outdoor air temperature 35°C DB; equivalent refrigerant piping length 7.5m with zero level difference.
2. Indoor air temperature 20°C DB; outdoor air temperature 7°C DB, 6°C WB; equivalent refrigerant piping length 7.5m with zero level difference.
3. Refer to table 1-5.1: Indoor and outdoor unit combination ratio limitations in Part 1.
4. Diameters given are those for the pipe connecting the outdoor unit combination to the first indoor branch joint for systems with total equivalent liquid piping lengths of less than 90m. For systems with total equivalent liquid piping lengths of 90m or longer, please refer to Part 3 “System Design and Installation” for connection piping diameters.
5. Sound pressure level is measured at a position 1m in front of the unit and 1.3m above the floor in a semi-anechoic chamber.
6. -15°C to -5°C low temperature cooling operation is just available for MS01.

32-36HP

Table 2-1.5: 32-36HP specifications

HP			32	34	36
Model name			MVD-V6R900W/V2GN1	MVD-V6R950W/V2GN1	MVD-V6R1000W/V2GN1
Combination type			16HP+16HP	16HP+18HP	18HP+18HP
Power supply		V/N/Hz	380-415/3/50		
Cooling[1]	Capacity	kW	90	95	100
	Power input	kW	24.00	25.81	28.72
	EER		3.75	3.68	3.48
Heating[2](Rated)	Capacity	kW	90	95	100
	Power input	kW	19.57	21.69	21.83
	COP		4.60	4.38	4.58
Heating[2](Max)	Capacity	kW	100	106	126
	Power input	kW	24.52	27.03	29.54
	COP		4.08	3.92	3.79
Connected indoor unit	Total capacity		50-200% of outdoor unit capacity[3]		
	Maximum quantity		64	64	64
Compressor	Type		DC inverter		
	Quantity		2		
	Oil type		FV68H		
	Start-up method		Soft start		
Fan	Type		Propeller		
	Motor type		DC		
	Quantity		4		
	Motor output	kW	0.92×4	0.92×4	0.92×4
	Static pressure	Pa	0,20,40,60,80(Selectable)		
	Air flow rate	m^3/h	29800	30700	31600
	Drive type		Direct		
Refrigerant	Type		R410A		
	Factory charge	kg	20	20	20
Pipe connections[4]	Liquid pipe	mm	Φ19.1	Φ19.1	Φ19.1
	Low pressure gas	mm	Φ34.9	Φ34.9	Φ34.9
	High pressure	mm	Φ28.6	Φ28.6	Φ28.6
Sound pressure level[5]		dB(A)	67	68	68
Sound power level[5]		dB(A)	91	91	91
Net dimensions (W×H×D)		mm	(1340×1635×825)×2	(1340×1635×825)×2	(1340×1635×825)×2
Packed dimensions (W×H×D)		mm	(1405×1805×910)×2	(1405×1805×910)×2	(1405×1805×910)×2
Net weight		kg	300×2	300×2	300×2
Gross weight		kg	325×2	325×2	325×2
Ambient temp. operation range	Cooling[6]	°C(DB)	-15 ~ 52		
	Heating	°C(WB/DB)	-25 ~ 19/-25~27		
	Domestic hot water	°C(DB)	-20 ~ 43		

Notes:

1. Indoor air temperature 27°C DB, 19°C WB; outdoor air temperature 35°C DB; equivalent refrigerant piping length 7.5m with zero level difference.
2. Indoor air temperature 20°C DB; outdoor air temperature 7°C DB, 6°C WB; equivalent refrigerant piping length 7.5m with zero level difference.
3. Refer to table 1-5.1: Indoor and outdoor unit combination ratio limitations in Part 1.
4. Diameters given are those for the pipe connecting the outdoor unit combination to the first indoor branch joint for systems with total equivalent liquid piping lengths of less than 90m. For systems with total equivalent liquid piping lengths of 90m or longer, please refer to Part 3 “System Design and Installation” for connection piping diameters.
5. Sound pressure level is measured at a position 1m in front of the unit and 1.3m above the floor in a semi-anechoic chamber.
6. -15°C to -5°C low temperature cooling operation is just available for MS01.

38-42HP

Table 2-1.6: 38-42HP specifications

HP			38	40	42
Model name			MVD-V6R1070W/V2GN1	MVD-V6R1120W/V2GN1	MVD-V6R1180W/V2GN1
Combination type			12HP+12HP+14HP	12HP+12HP+16HP	12HP+14HP+16HP
Power supply		V/N/Hz	380-415/3/50		
Cooling[1]	Capacity	kW	107	112	118.5
	Power input	kW	27.10	29.27	30.46
	EER		3.95	3.83	3.89
Heating[2] (Rated)	Capacity	kW	107	112	118.5
	Power input	kW	21.40	22.92	24.62
	COP		5.00	4.89	4.81
Heating[2](Max)	Capacity	kW	120	125	132.5
	Power input	kW	28.75	31.23	31.53
	COP		4.17	4.00	4.20
Connected indoor unit	Total capacity		50-200% of outdoor unit capacity[3]		
	Maximum quantity		64	64	64
Compressor	Type		DC inverter		
	Quantity		3		
	Oil type		FV68H		
	Start-up method		Soft start		
Fan	Type		Propeller		
	Motor type		DC		
	Quantity		4	4	5
	Motor output	kW	0.92×4	0.92×4	0.92×5
	Static pressure	Pa	0,20,40,60,80(Selectable)		
	Air flow rate	m^3/h	34000	34900	38900
	Drive type		Direct		
Refrigerant	Type		R410A		
	Factory charge	kg	26	26	28
Pipe connections[4]	Liquid pipe	mm	Φ19.1	Φ19.1	Φ19.1
	Low pressure gas	mm	Φ41.3	Φ41.3	Φ41.3
	High pressure gas	mm	Φ34.9	Φ34.9	Φ34.9
Sound pressure level[5]		dB(A)	65	67	67
Sound power level[5]		dB(A)	86	89	89
Net dimensions (W×H×D)		mm	(990×1635×790)×2+ 1340×1635×825	(990×1635×790)×2+ 1340×1635×825	990×1635×790+ (1340×1635×825)×2
Packed dimensions (W×H×D)		mm	(1090×1805×860)×2+14 05×1805×910	(1090×1805×860)×2+ 1405×1805×910	1090×1805×860+ (1405×1805×910)×2
Net weight		kg	232×2+300	232×2+300	232+300×2
Gross weight		kg	248×2+325	248×2+325	248+325×2
Ambient temp. operation	Cooling[6]	°C(DB)	-15 ~ 52		
	Heating	°C(WB/DB)	-25 ~ 19/-25~27		
	Domestic hot water	°C(DB)	-20 ~ 43		

Notes:
1. Indoor air temperature 27°C DB, 19°C WB; outdoor air temperature 35°C DB; equivalent refrigerant piping length 7.5m with zero level difference.
2. Indoor air temperature 20°C DB; outdoor air temperature 7°C DB, 6°C WB; equivalent refrigerant piping length 7.5m with zero level difference.
3. Refer to table 1-5.1: Indoor and outdoor unit combination ratio limitations in Part 1.
4. Diameters given are those for the pipe connecting the outdoor unit combination to the first indoor branch joint for systems with total equivalent liquid piping lengths of less than 90m. For systems with total equivalent liquid piping lengths of 90m or longer, please refer to Part 3 "System Design and Installation" for connection piping diameters.
5. Sound pressure level is measured at a position 1m in front of the unit and 1.3m above the floor in a semi-anechoic chamber.
6. -15°C to -5°C low temperature cooling operation is just available for MS01.

44-48HP

Table 2-1.7: 44-48HP specifications

HP			44	46	48
Model name			MVD-V6R1235W/V2GN1	MVD-V6R1300W/V2GN1	MVD-V6R1350W/V2GN1
Combination type			12HP+16HP+16HP	14HP+16HP+16HP	16HP+16HP+16HP
Power supply		V/N/Hz	380-415/3/50		
Cooling[1]	Capacity	kW	123.5	130	135
	Power input	kW	32.64	33.83	36.00
	EER		3.78	3.84	3.75
Heating[2](Rated)	Capacity	kW	123.5	130	135
	Power input	kW	26.13	27.83	29.35
	COP		4.73	4.67	4.60
Heating[2](Max)	Capacity	kW	137.5	145	150
	Power input	kW	34.01	34.31	36.79
	COP		4.04	4.23	4.08
Connected indoor unit	Total capacity		50-200% of outdoor unit capacity[3]		
	Maximum quantity		64	64	64
Compressor	Type		DC inverter		
	Quantity		3		
	Oil type		FV68H		
	Start-up method		Soft start		
Fan	Type		Propeller		
	Motor type		DC		
	Quantity		5	6	6
	Motor output	kW	0.92×5	0.92×6	0.92×6
	Static pressure	Pa	0,20,40,60,80(Selectable)		
	Air flow rate	m^3/h	39800	43800	44700
	Drive type		Direct		
Refrigerant	Type		R410A		
	Factory charge	kg	28	30	30
Pipe connections[4]	Liquid pipe	mm	Φ19.1	Φ19.1	Φ19.1
	Low pressure gas pipe	mm	Φ41.3	Φ41.3	Φ41.3
	High pressure gas	mm	Φ34.9	Φ34.9	Φ34.9
Sound pressure level[5]		dB(A)	68	68	69
Sound power level[5]		dB(A)	91	91	93
Net dimensions (W×H×D)		mm	990×1635×790+ (1340×1635×825)×2	(1340×1635×825)×3	(1340×1635×825)×3
Packed dimensions (W×H×D)		mm	1090×1805×860+ (1405×1805×910)×2	(1405×1805×910)×3	(1405×1805×910)×3
Net weight		kg	232+300×2	300×3	300×3
Gross weight		kg	248+325×2	325×3	325×3
Ambient temp. operation range	Cooling[6]	°C(DB)	-15 ~ 52		
	Heating	°C(WB/DB)	-25 ~ 19/-25~27		
	Domestic hot water	°C(DB)	-20 ~ 43		

Notes:
1. Indoor air temperature 27°C DB, 19°C WB; outdoor air temperature 35°C DB; equivalent refrigerant piping length 7.5m with zero level difference.
2. Indoor air temperature 20°C DB; outdoor air temperature 7°C DB, 6°C WB; equivalent refrigerant piping length 7.5m with zero level difference.
3. Refer to table 1-5.1: Indoor and outdoor unit combination ratio limitations in Part 1.
4. Diameters given are those for the pipe connecting the outdoor unit combination to the first indoor branch joint for systems with total equivalent liquid piping lengths of less than 90m. For systems with total equivalent liquid piping lengths of 90m or longer, please refer to Part 3 "System Design and Installation" for connection piping diameters.
5. Sound pressure level is measured at a position 1m in front of the unit and 1.3m above the floor in a semi-anechoic chamber.
6. -15°C to -5°C low temperature cooling operation is just available for MS01.

50-54HP

Table 2-1.8: 50-54HP specifications

HP			50	52	54
Model name			MVD-V6R1400W/V2GN1	MVD-V6R1450W/V2GN1	MVD-V6R1500W/V2GN1
Combination type			16HP+16HP+18HP	16HP+18HP+18HP	18HP+18HP+18HP
Power supply		V/N/Hz	380-415/3/50		
Cooling[1]	Capacity	kW	140	145	150
	Power input	kW	37.81	39.62	41.44
	EER		3.70	3.66	3.62
Heating[2](Rated)	Capacity	kW	140	145	150
	Power input	kW	31.47	33.59	35.71
	COP		4.45	4.32	4.20
Heating[2](Max)	Capacity	kW	156	162	168
	Power input	kW	39.29	41.80	44.31
	COP		3.97	3.88	3.79
Connected indoor unit	Total capacity		50-200% of outdoor unit capacity[3]		
	Maximum quantity		64	64	64
Compressor	Type		DC inverter		
	Quantity		3		
	Oil type		FV68H		
	Start-up method		Soft start		
Fan	Type		Propeller		
	Motor type		DC		
	Quantity		6	6	6
	Motor output	kW	0.92×6	0.92×6	0.92×6
	Static pressure	Pa	0,20,40,60,80(Selectable)		
	Air flow rate	m^3/h	45600	46500	47400
	Drive type		Direct		
Refrigerant	Type		R410A		
	Factory charge	kg	30	30	30
Pipe connections[4]	Liquid pipe	mm	Φ19.1	Φ19.1	Φ19.1
	Low pressure gas	mm	Φ41.3	Φ41.3	Φ41.3
	High pressure gas	mm	Φ34.9	Φ34.9	Φ34.9
Sound pressure level[5]		dB(A)	69	69	70
Sound power level[5]		dB(A)	93	93	93
Net dimensions (W×H×D)		mm	(1340×1635×825)×3	(1340×1635×825)×3	(1340×1635×825)×3
Packed dimensions (W×H×D)		mm	(1405×1805×910)×3	(1405×1805×910)×3	(1405×1805×910)×3
Net weight		kg	300×3	300×3	300×3
Gross weight		kg	325×3	325×3	325×3
Ambient temp. operation range	Cooling[6]	°C(DB)	-15 ~ 52		
	Heating	°C(WB/DB)	-25 ~ 19/-25~27		
	Domestic hot water	°C(DB)	-20 ~ 43		

Notes:

1. Indoor air temperature 27°C DB, 19°C WB; outdoor air temperature 35°C DB; equivalent refrigerant piping length 7.5m with zero level difference.
2. Indoor air temperature 20°C DB; outdoor air temperature 7°C DB, 6°C WB; equivalent refrigerant piping length 7.5m with zero level difference.
3. Refer to table 1-5.1: Indoor and outdoor unit combination ratio limitations in Part 1.
4. Diameters given are those for the pipe connecting the outdoor unit combination to the first indoor branch joint for systems with total equivalent liquid piping lengths of less than 90m. For systems with total equivalent liquid piping lengths of 90m or longer, please refer to Part 3 "System Design and Installation" for connection piping diameters.
5. Sound pressure level is measured at a position 1m in front of the unit and 1.3m above the floor in a semi-anechoic chamber.
6. -15°C to -5°C low temperature cooling operation is just available for MS01.

1.2 Mode Selection Box

MS01/N1-D / MS04/N1-D / MS06/N1-D

Table 2-1.9: MS01/N1-D, MS04/N1-D, MS06/N1-D specifications

Model name			MS01/N1-D[1]	MS04/N1-D	MS06/N1-D
Power supply		V/ph/Hz	220-240/1/50		
Max. number of indoor unit groups			1	4	6
Max. number of units per group			8	5	5
Max. number of downstream indoor units			8	20	30
Max. capacity of each group of indoor units		kW	32	16	16
Total capacity of downstream indoor units		kW	32	49	63
Pipe connections to ODU	Liquid pipe	mm	Ø9.53/Ø12.7	Ø9.53/Ø12.7/Ø15.9/Ø19.05	Ø9.53/Ø12.7/Ø15.9/Ø19.05
	Low pressure gas pipe	mm	Ø15.9/Ø19.1/Ø22.2	Ø19.1/Ø22.2/Ø28.6	Ø19.1/Ø22.2/Ø28.6
	High pressure gas pipe	mm	Ø12.7/Ø15.9/Ø19.1	Ø15.9/Ø19.1/Ø22.2/Ø28.6	Ø15.9/Ø19.1/Ø22.2/Ø28.6
Pipe connections to IDU	Liquid pipe	mm	Ø6.35/Ø9.53	Ø6.35/Ø9.53	Ø6.35/Ø9.53
	Gas pipe	mm	Ø12.7/Ø15.9	Ø12.7/Ø15.9	Ø12.7/Ø15.9
Sound pressure level[2]		dB(A)	40	44	45
Sound power level[2]		dB(A)	60	63	65
Net dimensions (W×H×D)		mm	440×195×296	668×250×574	668×250×574
Packed dimensions (W×H×D)		mm	740×275×405	1020×390×850	1020×390×850
Net weight		kg	10.5	33	36
Gross weight		kg	14	58	61

Notes:

1. MS01 is for low temperature cooling operation and leakage detection.
2. The sound level is measured at a position 1m below the MS box in a semi-anechoic chamber whilst the MS box is switching mode. MS box should not be installed in locations with low-noise requirements.

MS08/N1-D / MS10/N1-D / MS12/N1-D

Table 2-1.10: MS08/N1-D, MS10/N1-D, MS12/N1-D specifications

Model name			MS08/N1-D	MS10/N1-D	MS12/N1-D
Power supply		V/ph/Hz	220-240/1/50		
Max. number of indoor unit groups			8	10	12
Max. number of units per group			5	5	5
Max. number of downstream indoor units			40	47	47
Max. capacity of each group of indoor units		kW	16	16	16
Total capacity of downstream indoor units		kW	85	85	85
Pipe connections to ODU	Liquid pipe	mm	Ø12.7/Ø15.9/Ø19.1/Ø22.2	Ø12.7/Ø15.9/Ø19.1/Ø22.2	Ø12.7/Ø15.9/Ø19.1/Ø22.2
	Low pressure gas pipe	mm	Ø22.2/Ø28.6/Ø34.9	Ø22.2/Ø28.6/Ø34.9	Ø22.2/Ø28.6/Ø34.9
	High pressure gas pipe	mm	Ø19.1/Ø22.2/Ø28.6	Ø19.1/Ø22.2/Ø28.6	Ø19.1/Ø22.2/Ø28.6
Pipe connections to IDU	Liquid pipe	mm	Ø6.35/Ø9.53	Ø6.35/Ø9.53	Ø6.35/Ø9.53
	Gas pipe	mm	Ø12.7/Ø15.9	Ø12.7/Ø15.9	Ø12.7/Ø15.9
Sound pressure level[1]		dB(A)	47	47	47
Sound power level[1]		dB(A)	65	65	65
Net dimensions (W×H×D)		mm	974×250×574	974×250×574	974×250×574
Packed dimensions (W×H×D)		mm	1320×390×850	1320×390×850	1320×390×850
Net weight		kg	48	51	54
Gross weight		kg	79	82	85

Notes:

1. The sound level is measured at a position 1m below the MS box in a semi-anechoic chamber whilst the MS box is switching mode. MS box should not be installed in locations with low-noise requirements.

2 Dimensions

2.1 Single Units

8/10/12HP

Figure 2-2.1: 8/10/12HP dimensions (unit: mm)

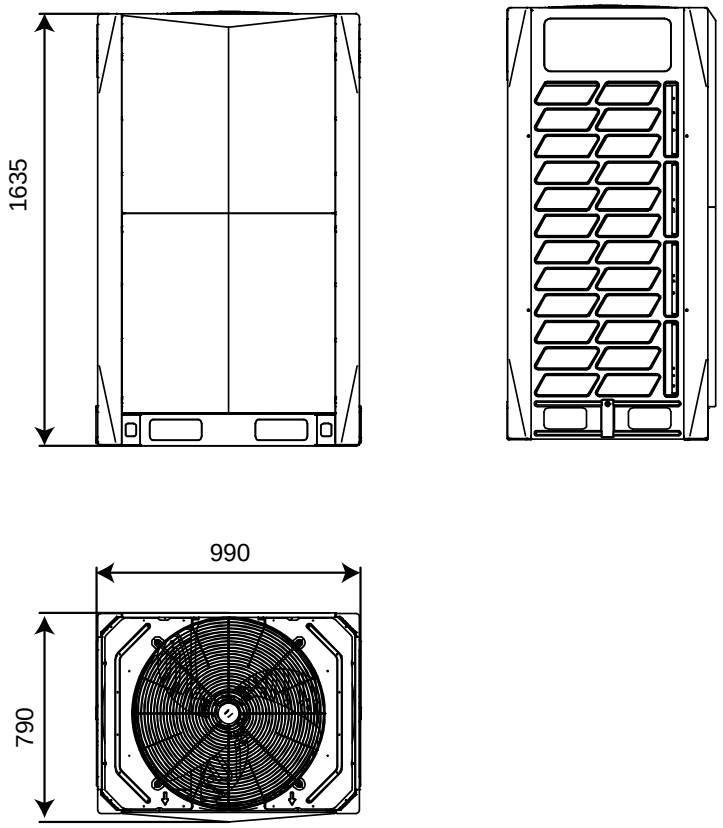

14/16/18HP

Figure 2-2.2: 14/16/18HP dimensions (unit: mm)

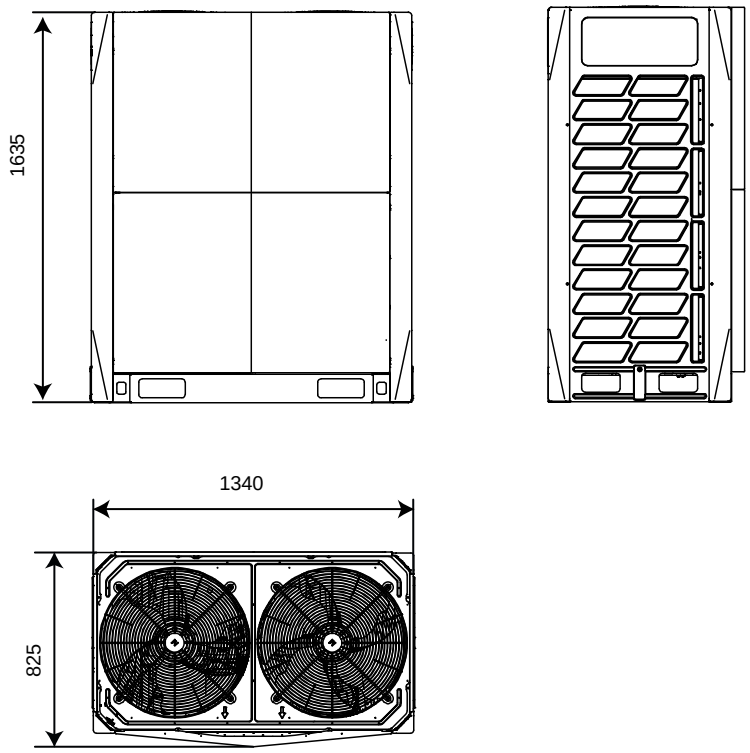

2.2 Combinations of Units

20/22HP

Figure 2-2.3: 20/22HP dimensions (unit: mm)

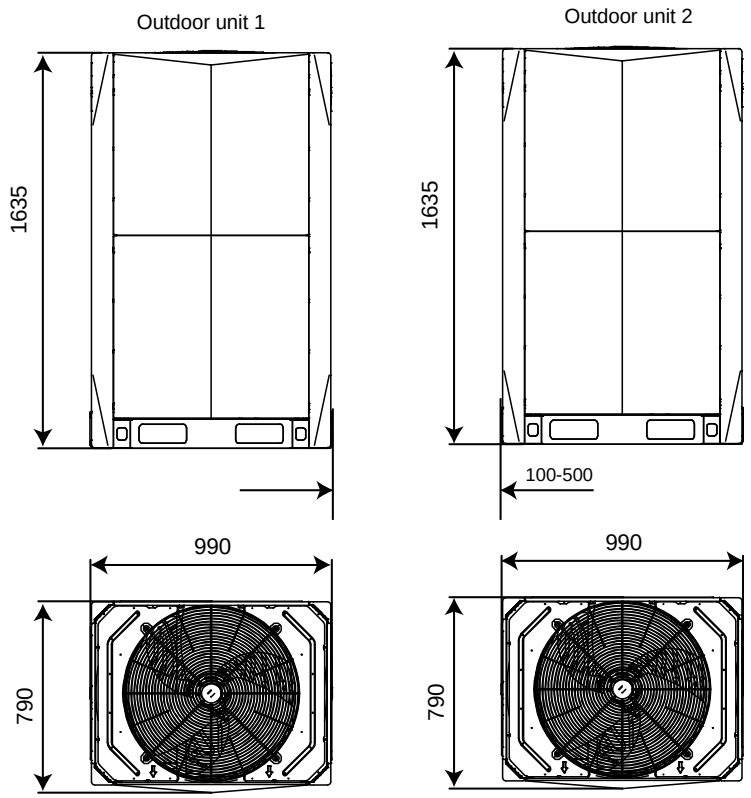

24/26/28/30HP

Figure 2-2.4: 24/26/28/30HP dimensions (unit: mm)

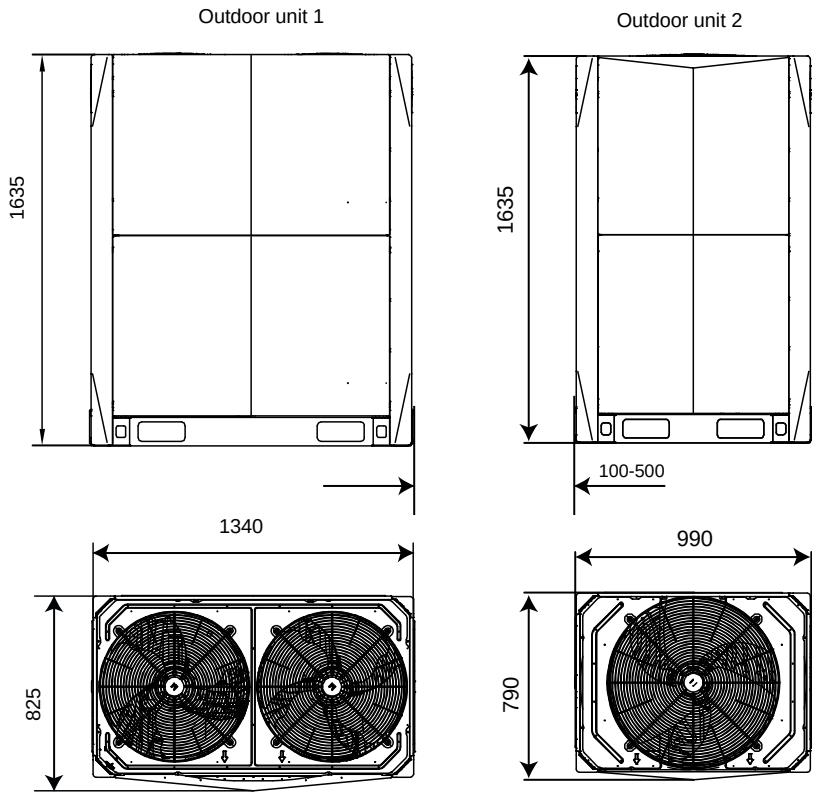

32/34/36HP

Figure 2-2.5: 32/34/36HP dimensions (unit: mm)

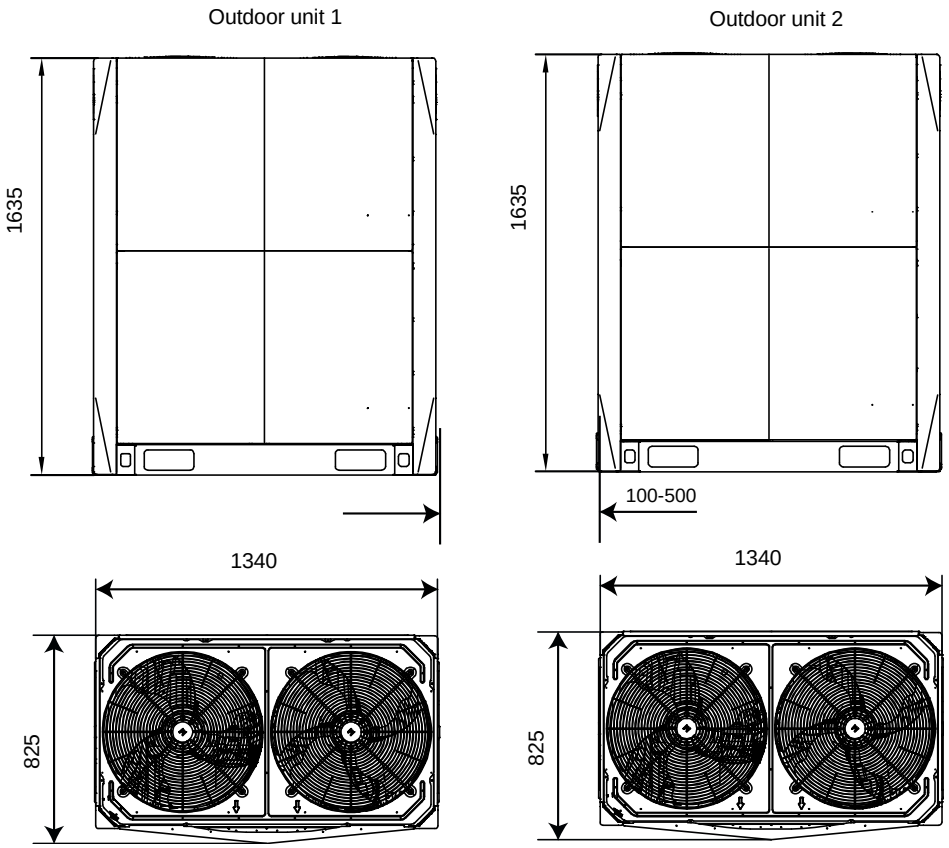

38/40HP

Figure 2-2.6: 38/40HP dimensions (unit: mm)

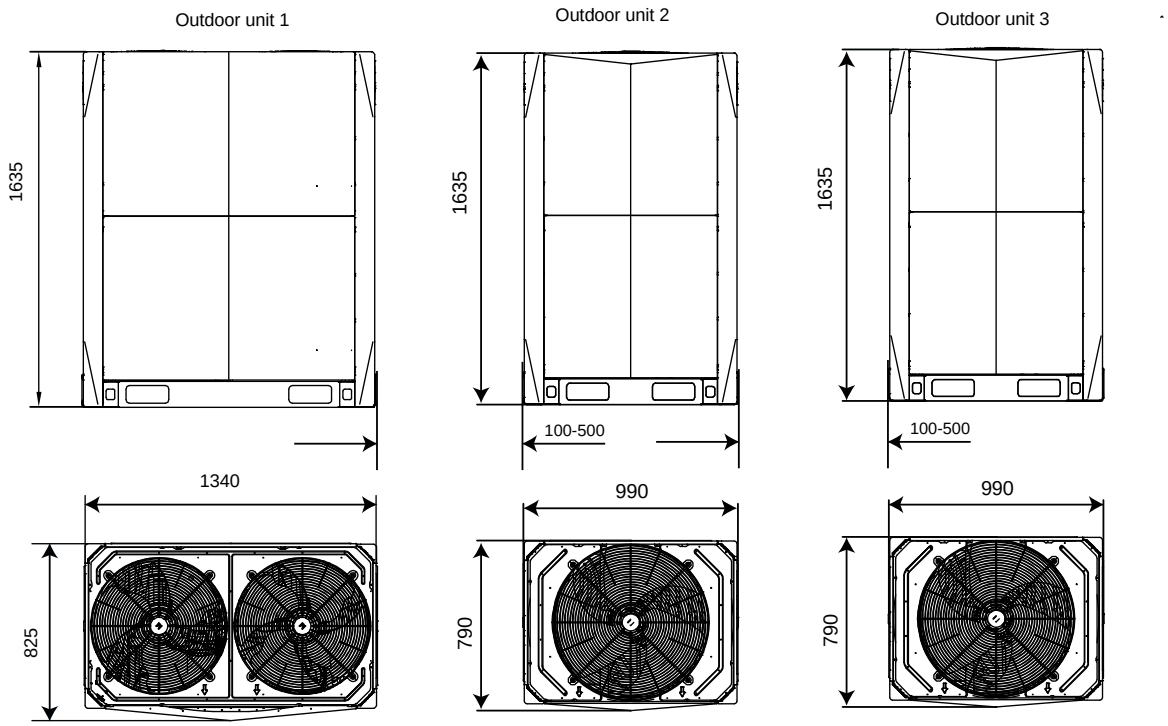

42/44HP

Figure 2-2.7: 42/44HP dimensions (unit: mm)

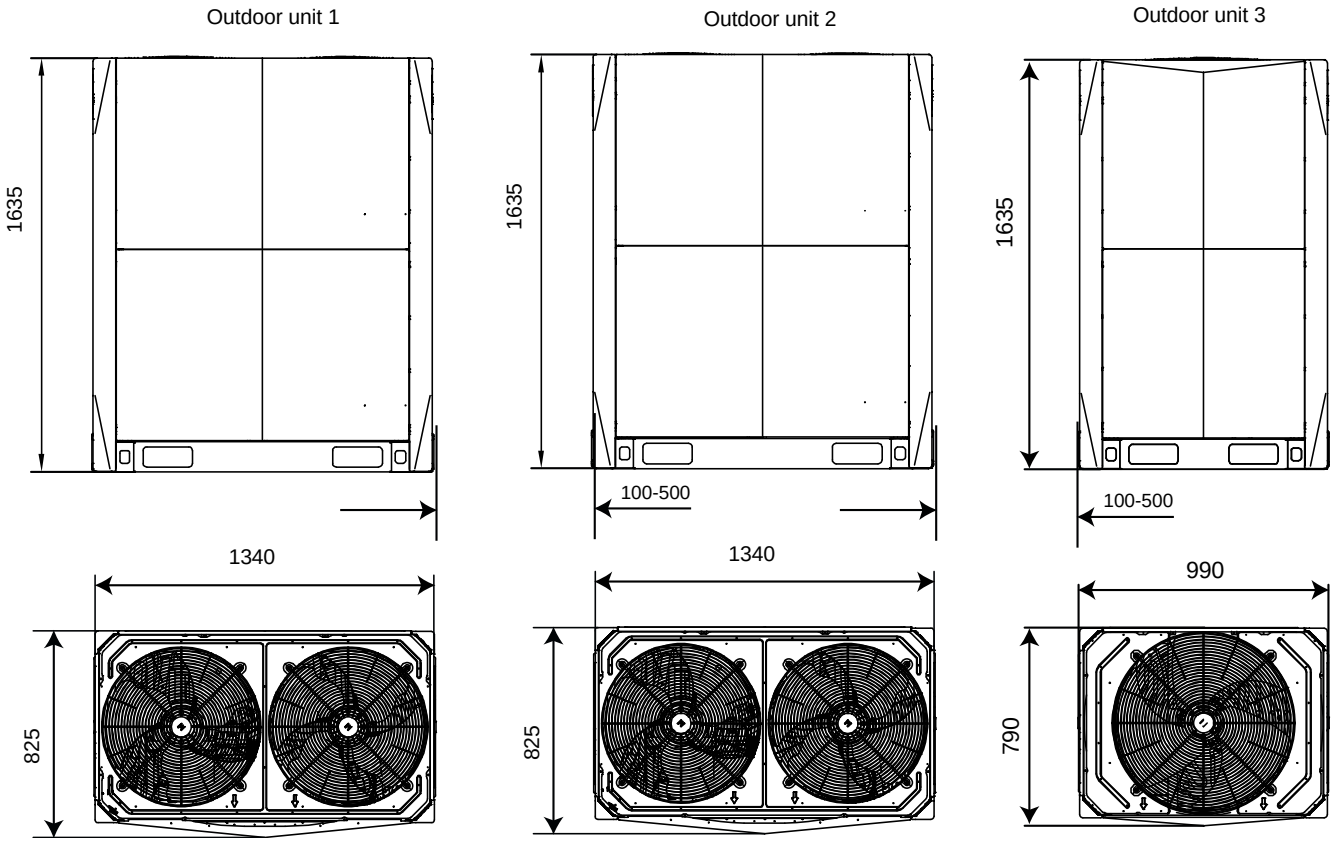

46/48/50/52/54HP

Figure 2-2.8: 46/48/50/52/54HP dimensions (unit: mm)

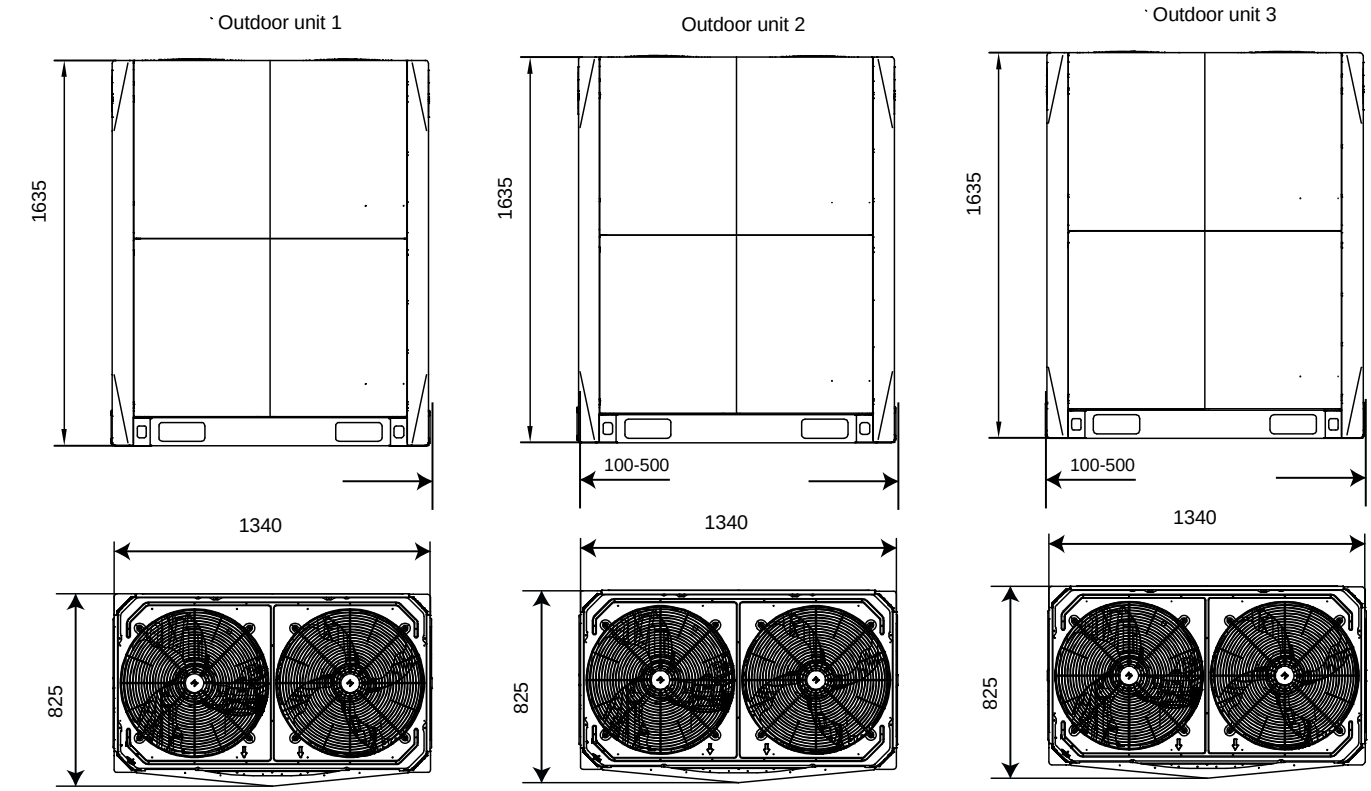

2.3 Mode Selection Box

MS01

Figure 2-2.9: Ceiling-suspended type MS01 dimensions (unit: mm)

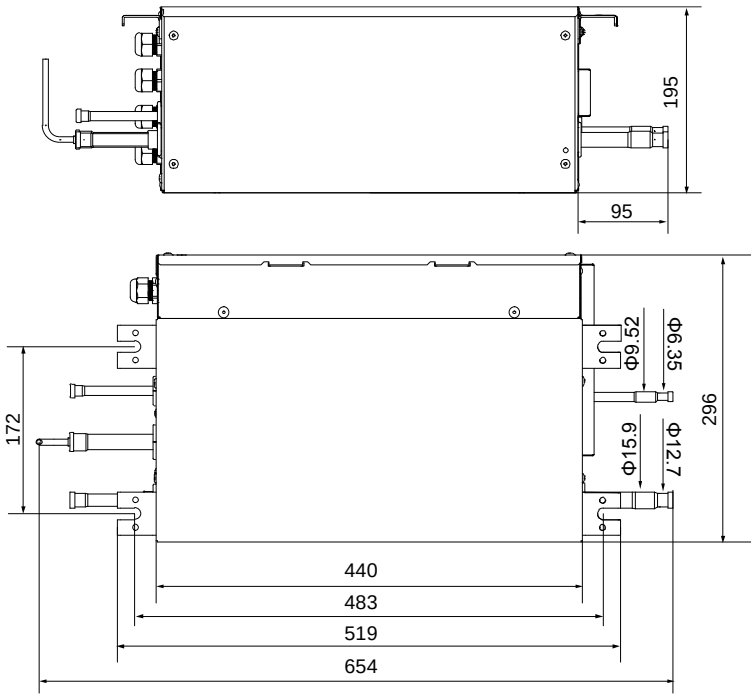

Notes :

1. MS01 can be ceiling-supended installed and wall-mounted installed.
2. MS01 is for low temperature cooling operation and leakage detection.

Figure 2-2.10: Wall-mounted type MS01 dimensions (unit: mm)

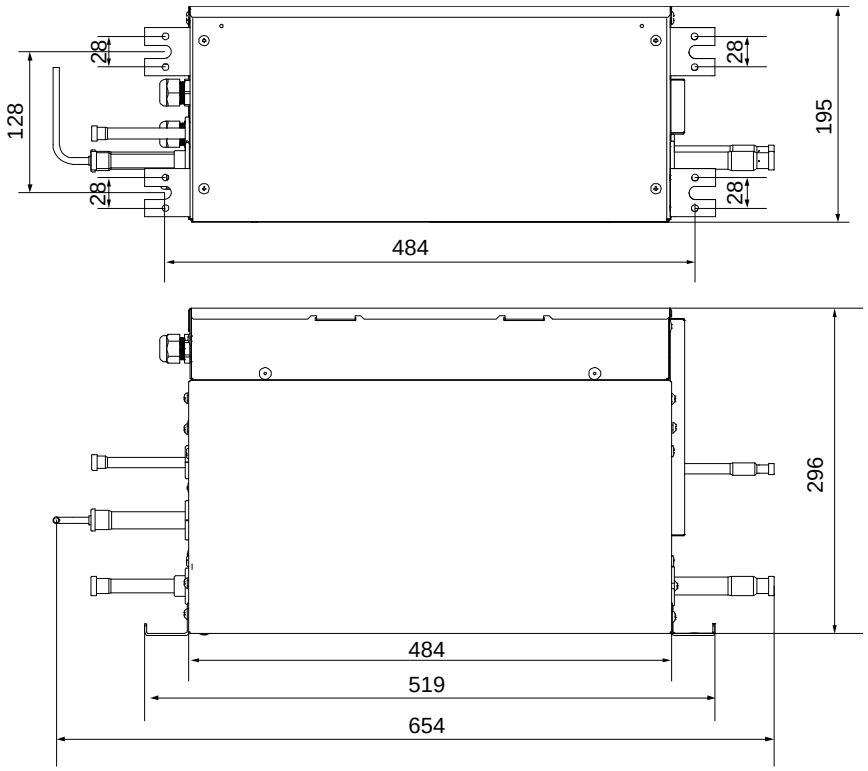

Notes :

1. MS01 can be ceiling-supended installed and wall-mounted installed.
2. Low temperature cooling operation and leakage detection function are available in MS01.

MS04-12

Figure 2-2.11: MS04-12 dimensions (unit: mm)

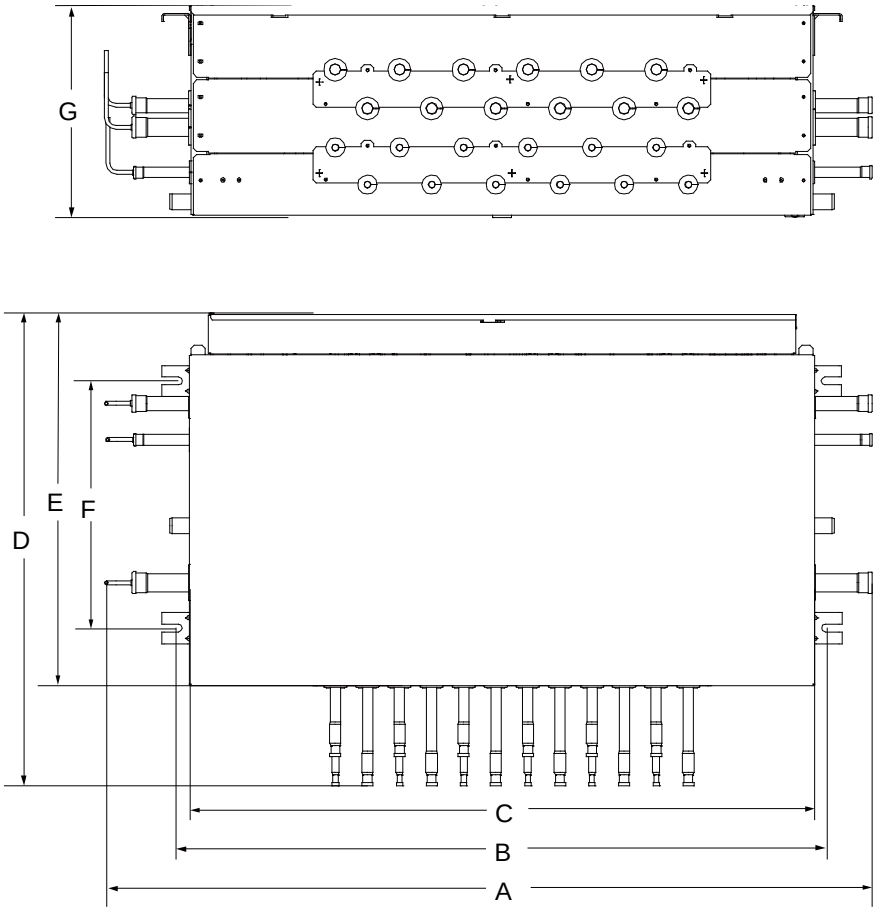

Table 2-1.1: MS04-12 sdimensions (unit :mm)

Model	A	B	C	D	E	F	G
MS04 MS06	889	702	700	700	574	383	250
MS08 MS10 MS12	1195	1008	700	700	574	383	250

3 Center of Gravity

8/10/12HP

Figure 2-3.1: 8/10/12HP center of gravity (unit: mm)

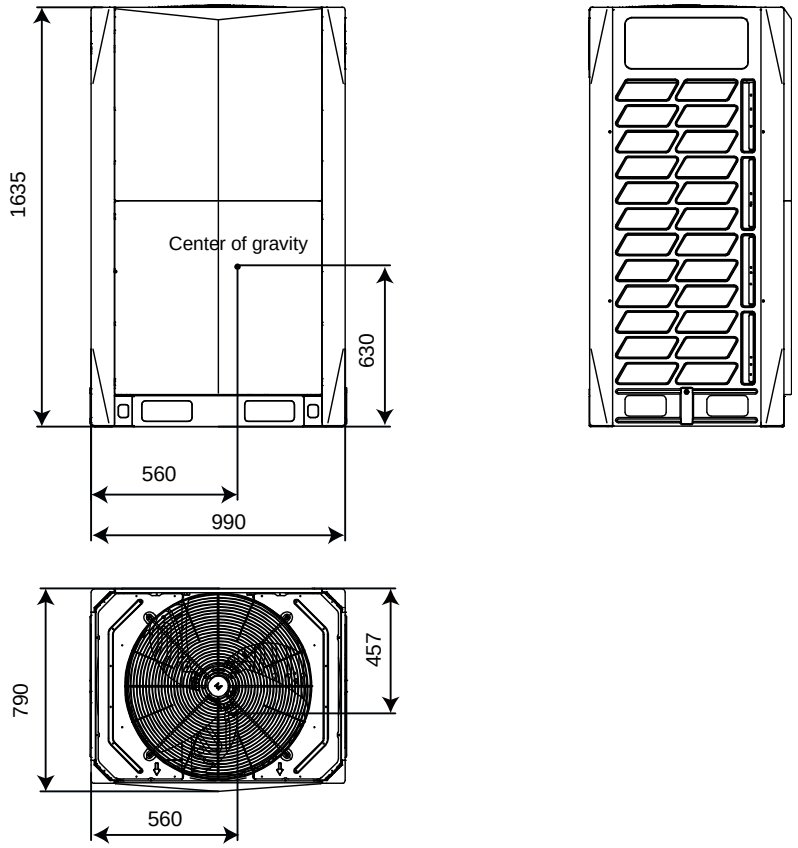

14/16/18HP

Figure 2-3.2: 14/16/18HP center of gravity (unit: mm)

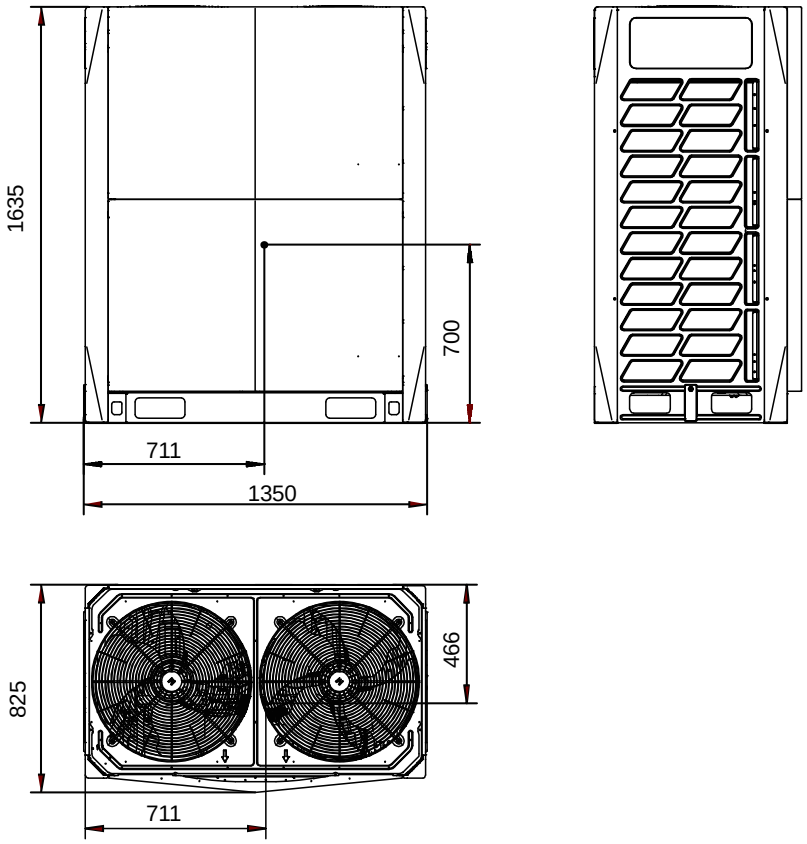

4 Installation Space Requirements

4.1 Outdoor Units Space Requirements

For single unit installation

Figure 2-4.1: Single unit installation (unit: mm)

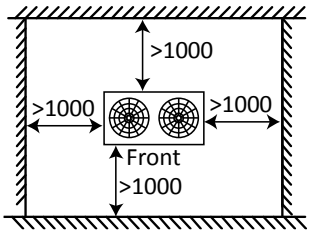

For single row installation

Figure 2-4.2: Single row installation (unit: mm)

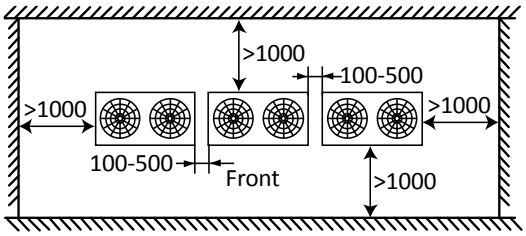

For multi-row installation

Figure 2-4.3: Multi-row installation (unit: mm)

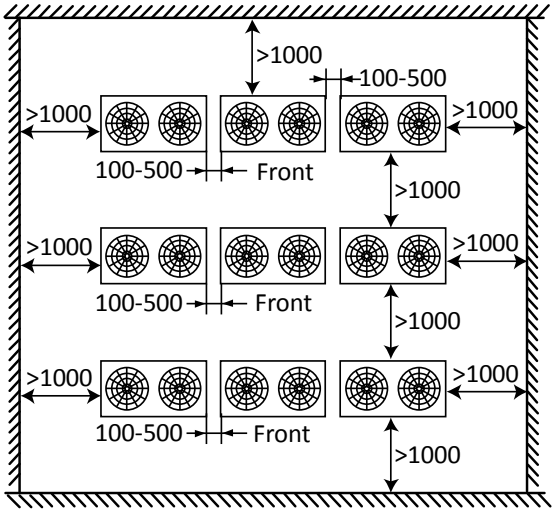

Depending on the height of adjacent walls relative to the height of the units, ducting may be required to ensure proper air discharge. In the situation depicted in Figure 2-4.4, the vertical section of ducting should be at least H-h high.

Figure 2-4.4: Top of unit below top of adjacent wall

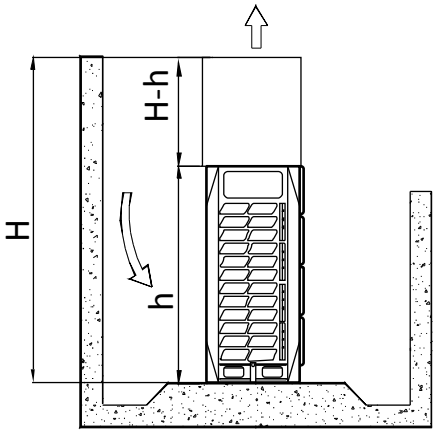

4.2 Mode Selection Box Space Requirements

MS01

Figure 2-4.5: MS01 installation requirement (unit: mm)

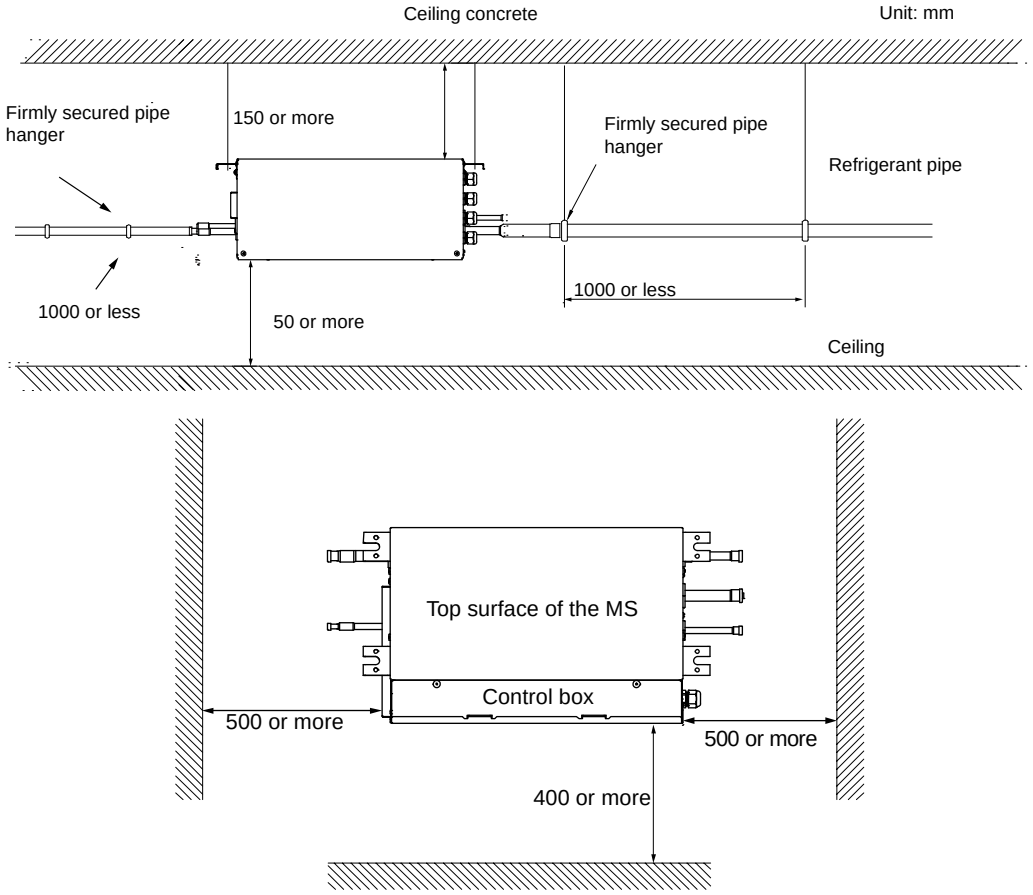

MS04-12

Figure 2-4.6: MS04-12 installation requirement (unit: mm)

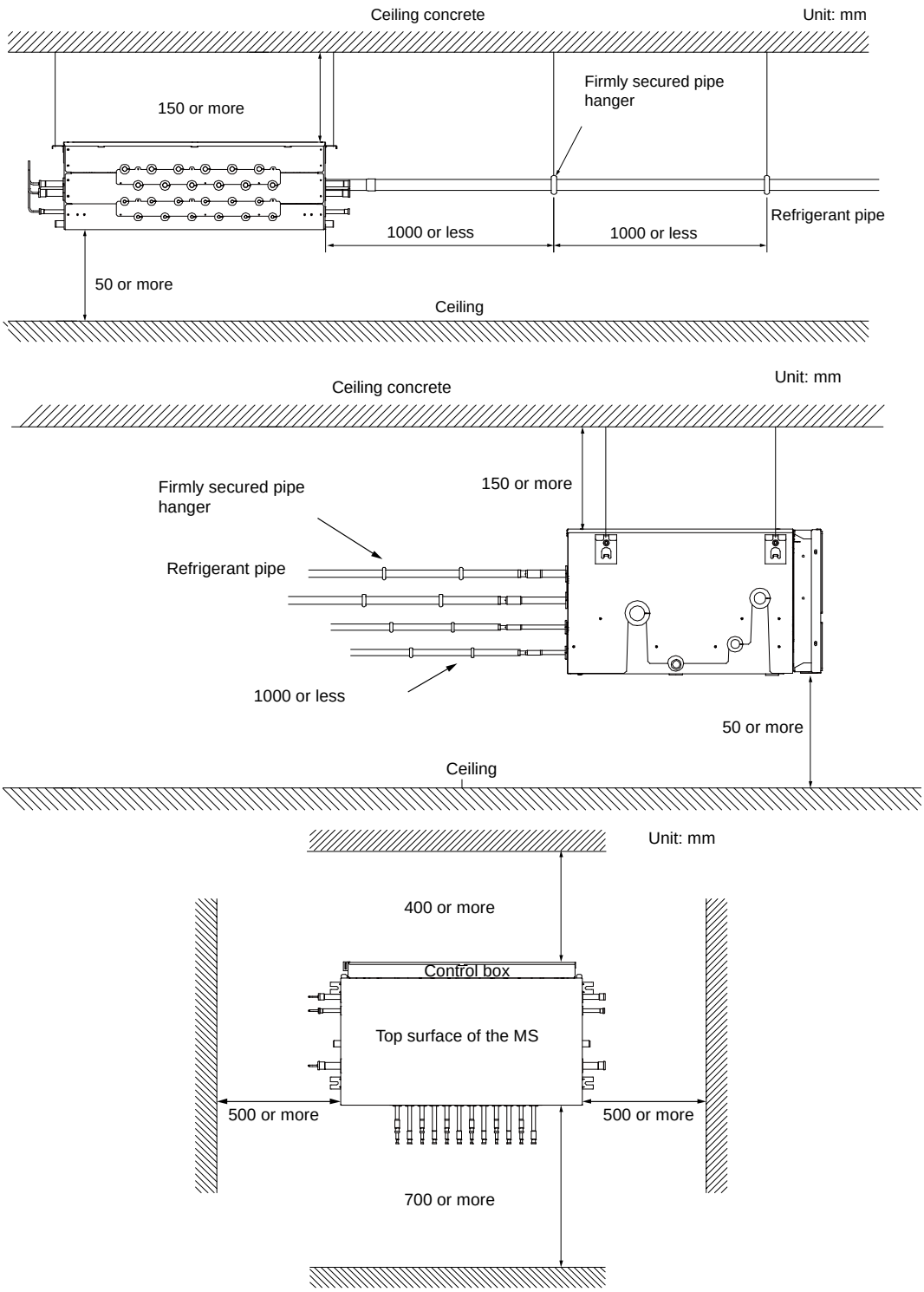

5 Piping Diagrams

Figure 2-5.1: 8HP/10HP/12HP piping diagram

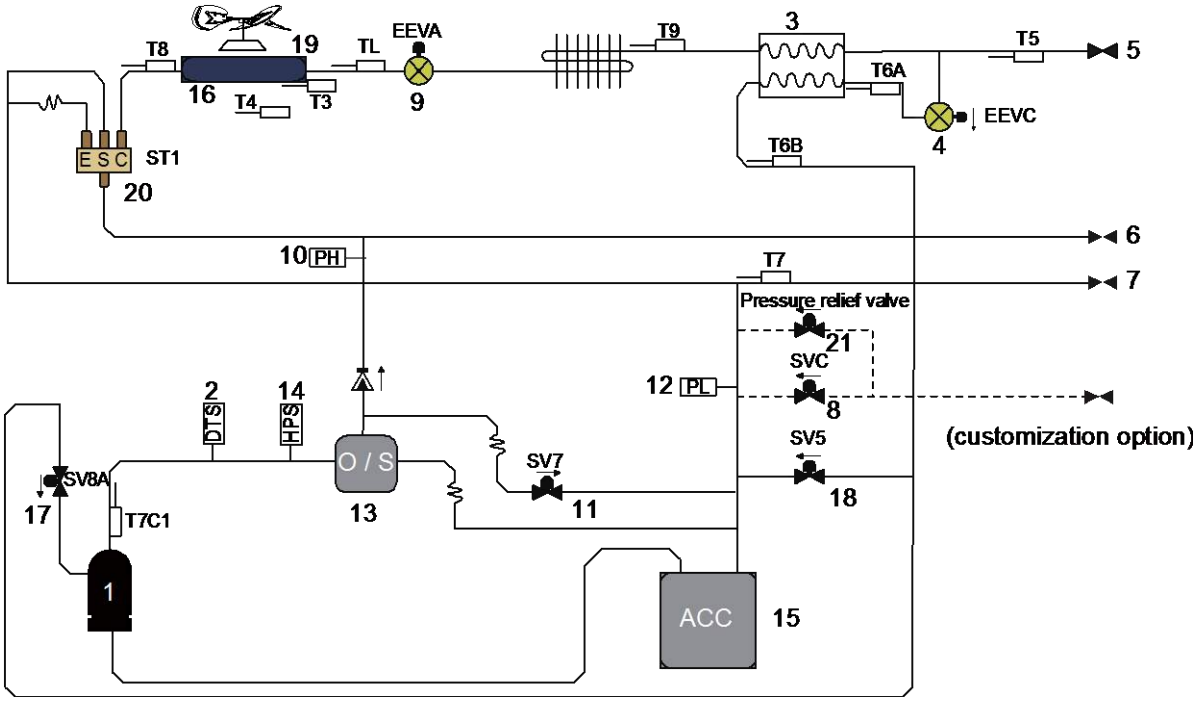

Legend				
No.	**Parts name**		**No.**	**Parts name**
1	Compressor		17	Compressor vapor injection valve (SV8A)
2	Discharge temperature switch		18	Injection bypass solenoid valve(SV5)
3	Plate heat exchanger		19	FAN A
4	Electronic expansion valve (EEVC)		20	4-way valve
5	Stop valve (liquid side)		21	Pressure relief valve (customization option)
6	Stop valve (high pressure gas side)		**Sensor Code**	**Description**
7	Stop valve (low pressure gas side)		T3	Heat exchanger deicer temperature sensor
8	Refrigerant charge solenoid valve(SVC) (customization option)		T4	Outdoor air temperature sensor
9	Electronic expansion valve (EEVA)		T5	Liquid pipe temperature sensor
10	High pressure sensor		T6A	Injection liquid temperature sensor
11	Hot gas bypass solenoid valve(SV7)		T6B	Subcooling gas temperature sensor
12	Low pressure sensor		T7	Suction temperature sensor
13	Oil separator		T8	Heat exchanger gas temperature sensor
14	High pressure switch		T9	Heat sink temperature sensor
15	Gas-liquid separator		TL	Heat exchanger liquid temperature sensor
16	Heat exchanger		T7C1	Compressor discharge temperature sensor

Figure 2-5.2: 14HP/16HP/18HP piping diagram

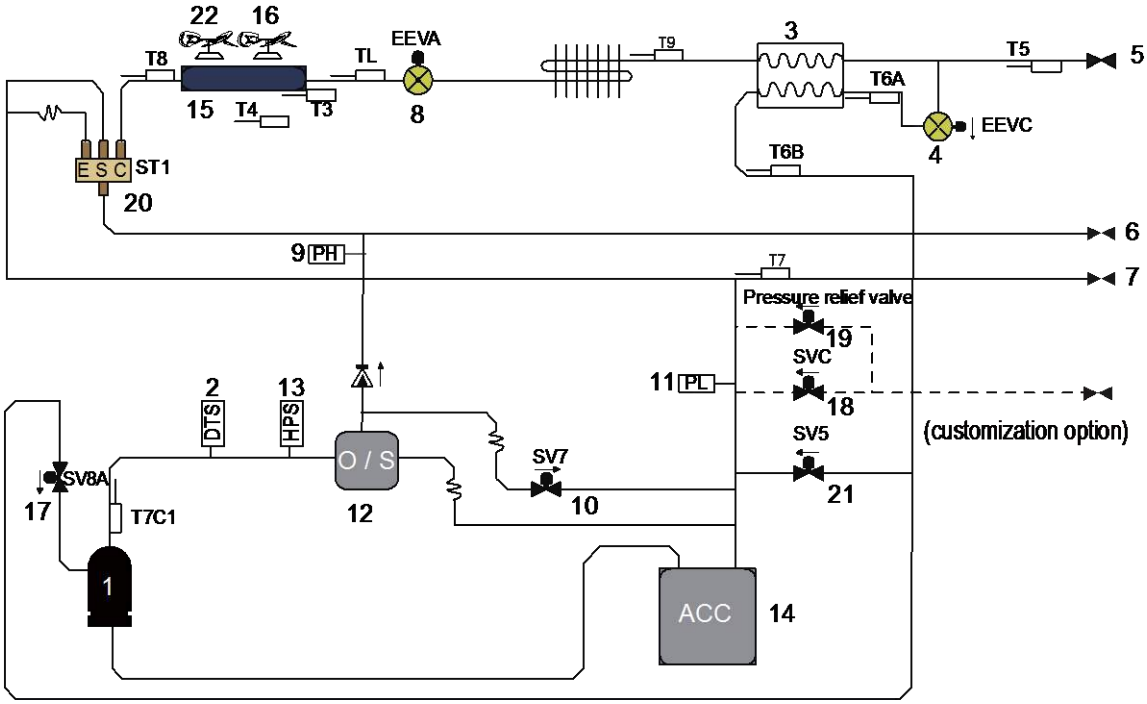

Legend				
No.	**Parts name**		**No.**	**Parts name**
1	Compressor		18	Refrigerant charge solenoid valve(SVC) (customization option)
2	Discharge temperature switch		19	Pressure relief valve (customization option)
3	Plate heat exchanger		20	4-way valve
4	Electronic expansion valve (EEVC)		21	Injection bypass solenoid valve(SV5)
5	Stop valve (liquid side)		22	FAN A
6	Stop valve (high pressure gas side)		**Sensor Code**	**Description**
7	Stop valve (low pressure gas side)		T3	Heat exchanger deicer temperature sensor
8	Electronic expansion valve (EEVA)		T4	Outdoor air temperature sensor
9	High pressure sensor		T5	Liquid pipe temperature sensor
10	Hot gas bypass solenoid valve(SV7)		T6A	Injection liquid temperature sensor
11	Low pressure sensor		T6B	Subcooling gas temperature sensor
12	Oil separator		T7	Suction temperature sensor
13	High pressure switch		T8	Heat exchanger gas temperature sensor
14	Gas-liquid separator		T9	Heat sink temperature sensor
15	Heat exchanger		TL	Heat exchanger liquid temperature sensor
16	FAN B		T7C1	Compressor discharge temperature sensor
17	Compressor vapor injection valve (SV8A)			

Key components:

1. **Oil separator:**
   Separates oil from gas refrigerant pumped out of the compressor and quickly returns it to the compressor. Separation efficiency is up to 99%.
2. **Gas-liquid separator:**
   Separates liquid refrigerant from gas refrigerant, stores liquid refrigerant and oil to protect compressor from liquid hammering.
3. **Electronic expansion valve (EEV):**
   Controls refrigerant flow and reduces refrigerant pressure.
4. **Four-way valve:**
   Controls heat exchanger function. When open, the heat exchanger functions as an evaporator; When closed, the heat exchanger functions as a condenser. Refer to part 3, “Heat Exchanger Control”.
5. **Plate heat exchanger:**
   In cooling mode, it can improve super-cooling degree and the super-cooled refrigerant can achieve better heat exchange in indoor side. In heating mode, the refrigerant comes from the plate heat exchanger going to the compressor can enhance the refrigerant enthalpy and improve the heating capacity in low ambient temperature. Refrigerant volume in plate heat exchanger is controlled according to temperature different between plate heat exchanger inlet and outlet or the temperature different between discharge temperature and target discharge temperature.
6. **Solenoid valve SV5:**
   Controls the refrigerant from plate heat exchanger to gas-liquid separator.
7. **Solenoid valve SV7:**
   Bypass pressure at start-up stage and control capacity at low load condition; High-pressure-rise prevention; Discharge superheat protection.
8. **Solenoid valve SV8A**
   Allows refrigerant from plate heat exchanger inject directly to the compressor. SV8A opens when compressor startup and closes when compressor stop.
9. **High pressure switch**
   Regulate system pressure. When system pressure rises above the upper limit, the high pressure switch turn off, stopping the compressor. When the high pressure protection recovers, the compressor restarts.

6 Wiring Diagrams

Figure 2-6.1: V6R wiring diagram

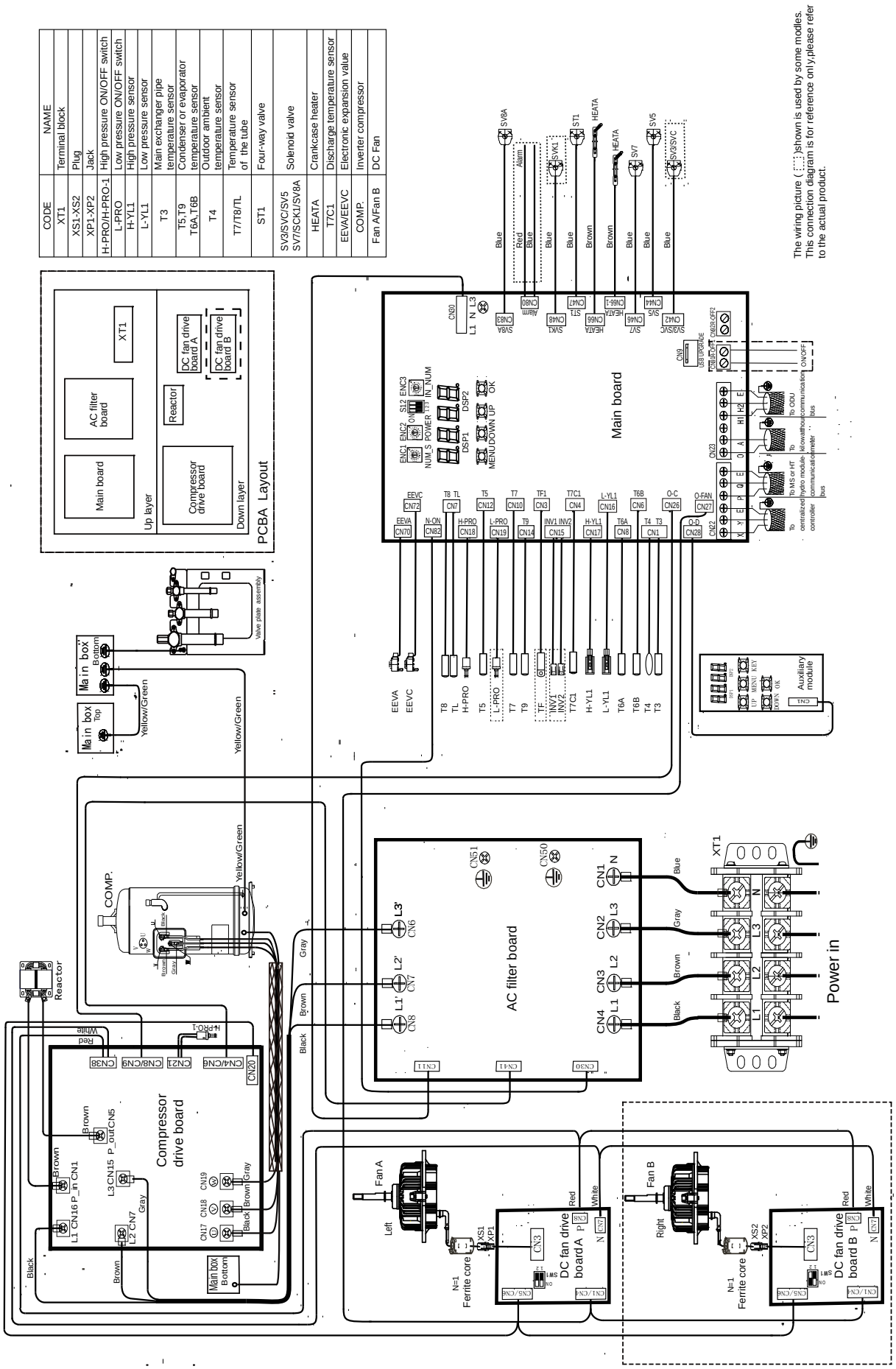

Figure 2-6.2: MS01 wiring diagram

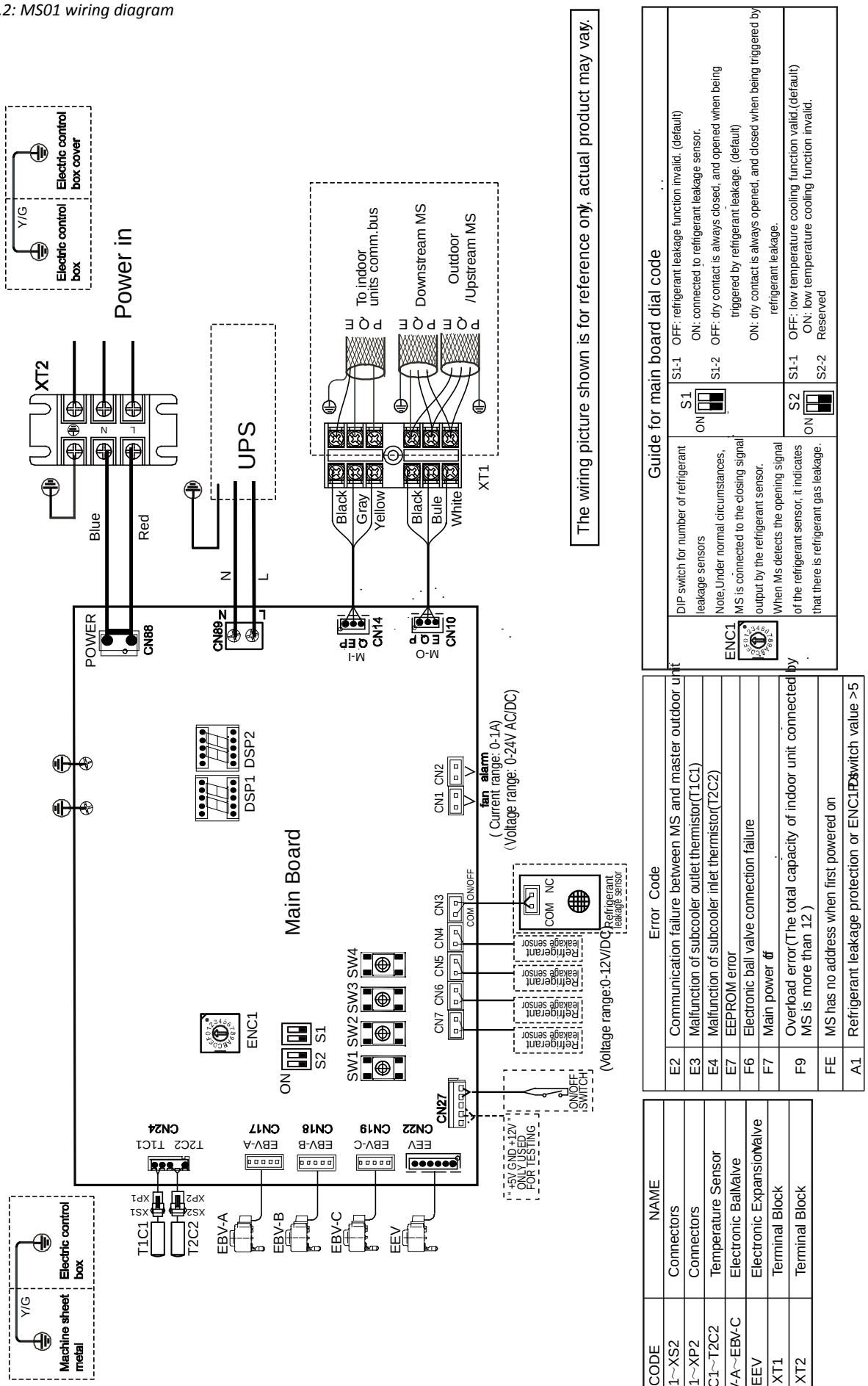

Error Code	
E2	Communication failure between MS and master outdoor unit
E3	Malfunction of subcooler outlet thermistor(T1C1)
E4	Malfunction of subcooler inlet thermistor(T2C2)
E7	EEPROM error
F6	Electronic ball valve connection failure
F7	Main power off
F9	Overload error(The total capacity of indoor unit connected by MS is more than 12)
FE	MS has no address when first powered on
A1	Refrigerant leakage protection or ENC1 DIP switch value >5

CODE	NAME
XS1~XS2	Connectors
XP1~XP2	Connectors
T1C1~T2C2	Temperature Sensor
EBV-A~EBV-C	Electronic Ball Valve
EEV	Electronic Expansion Valve
XT1	Terminal Block
XT2	Terminal Block

Figure 2-6.3: MS04/MS06 wiring diagram

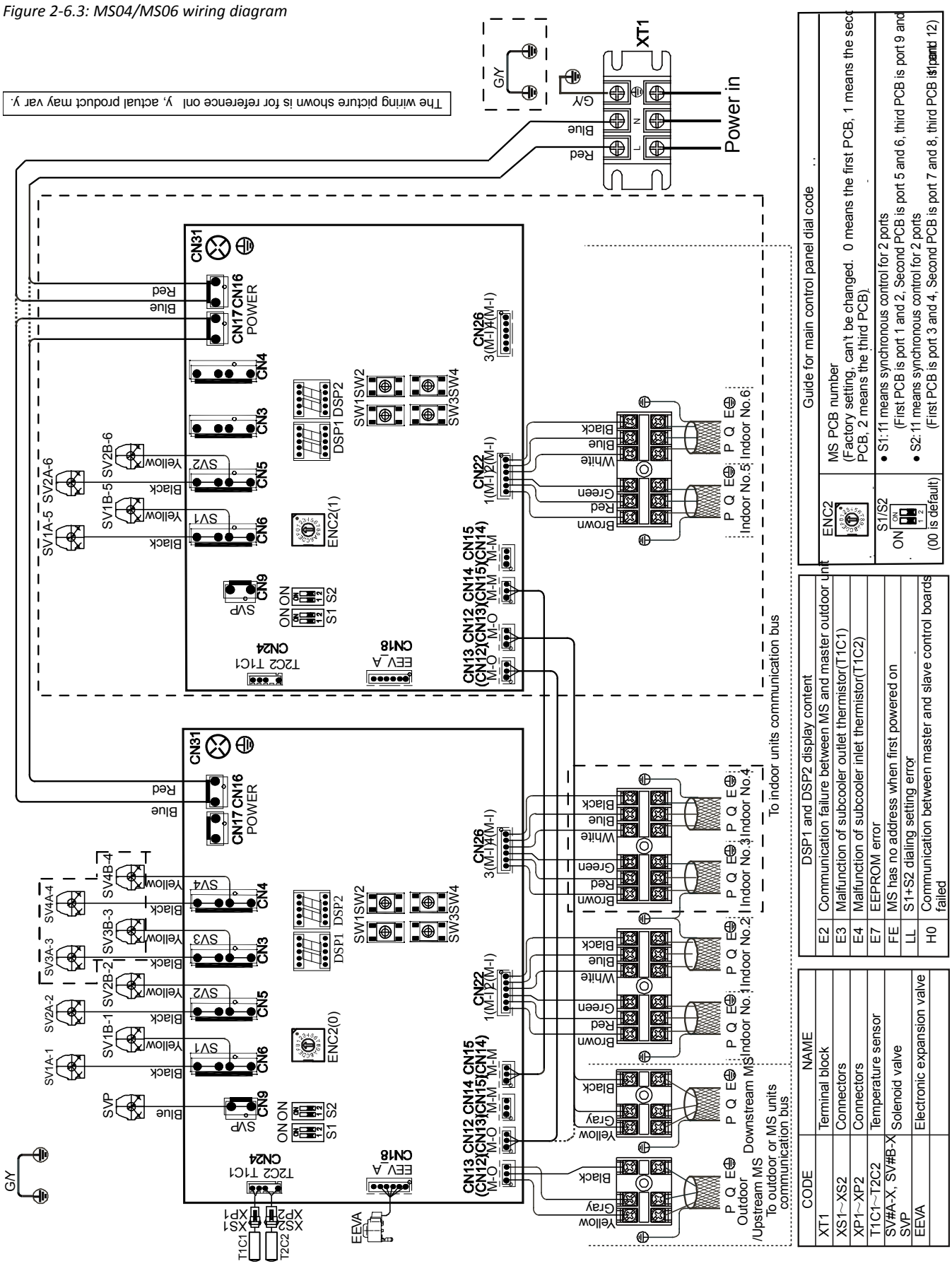

DSP1 and DSP2 display content	
E2	Communication failure between MS and master outdoor unit
E3	Malfunction of subcooler outlet thermistor(T1C1)
E4	Malfunction of subcooler inlet thermistor(T1C2)
E7	EEPROM error
FE	MS has no address when first powered on
LL	S1+S2 dialing setting error
H0	Communication between master and slave control boards failed

CODE	NAME
XT1	Terminal block
XS1~XS2	Connectors
XP1~XP2	Connectors
T1C1~T2C2	Temperature sensor
SV#A-X, SV#B-X	Solenoid valve
SVP	
EEVA	Electronic expansion valve

Figure 2-6.4: MS08/MS10/MS12 wiring diagram

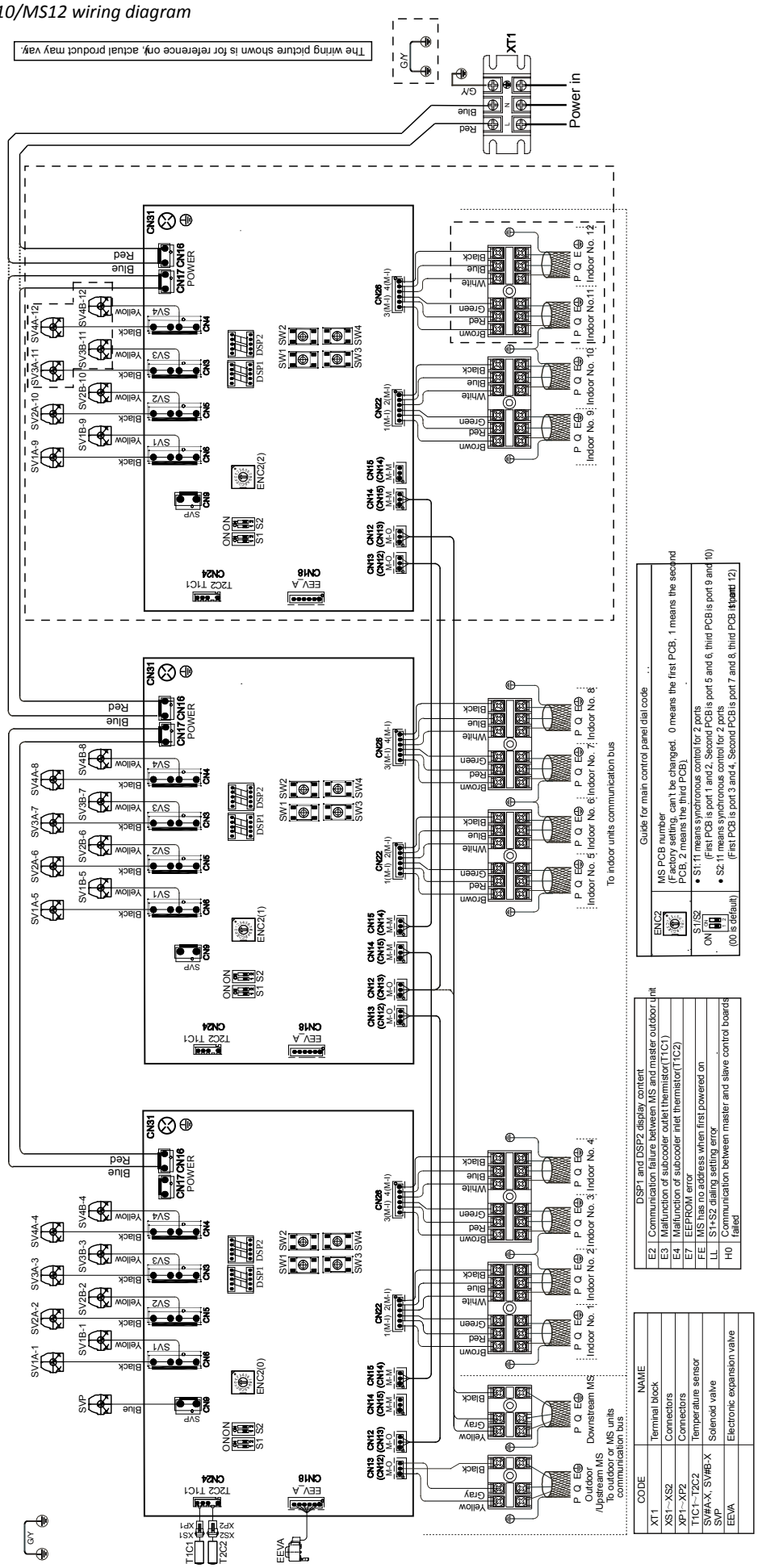

7 Electrical Characteristics

Table 2-7.1: Outdoor unit electrical characteristics

Model				Power Supply[1]							Compressor		OFM	
Capacity	Modules			Hz	Volts	Min. volts	Max. volts	MCA[2]	TOCA[3]	MFA[4]	MSC[5]	RLA[6]	kW	FLA
8HP				50	380~415	342	456	18	21.3	20	/	12.2	0.92	1.3
10HP				50	380~415	342	456	22	25.5	25	/	16.5	0.92	1.5
12HP				50	380~415	342	456	24	27.7	25	/	17.2	0.92	1.7
14HP				50	380~415	342	456	28	31.7	30	/	20.1	0.92×2	1.7
16HP				50	380~415	342	456	34	37.9	35	/	24.5	0.92×2	1.9
18HP				50	380~415	342	456	36	40.2	40	/	29.7	0.92×2	2.2
20HP	10HP	10HP		50	380~415	342	456	44	42.6	25+25	/	16.5×2	0.92×2	3.0
22HP	10HP	12HP		50	380~415	342	456	46	53.2	25+25	/	16.5+17.2	0.92×2	3.2
24HP	10HP	14HP		50	380~415	342	456	50	57.2	25+30	/	16.5+20.1	0.92×3	3.2
26HP	12HP	14HP		50	380~415	342	456	52	59.4	25+30	/	17.2+20.1	0.92×3	3.4
28HP	12HP	16HP		50	380~415	342	456	58	65.6	25+35	/	17.2+24.5	0.92×3	3.9
30HP	12HP	18HP		50	380~415	342	456	60	67.9	25+40	/	17.2+29.7	0.92×3	3.9
32HP	16HP	16HP		50	380~415	342	456	68	75.8	35+35	/	24.5×2	0.92×4	3.8
34HP	16HP	18HP		50	380~415	342	456	70	78.1	35+40	/	24.5+29.7	0.92×4	4.1
36HP	18HP	18HP		50	380~415	342	456	72	80.4	40+40	/	29.7×2	0.92×4	4.4
38HP	12HP	12HP	14HP	50	380~415	342	456	76	87.1	25+25+30	/	17.2×2+20.1	0.92×4	5.1
40HP	12HP	12HP	16HP	50	380~415	342	456	82	93.3	25+25+35	/	17.2×2+24.5	0.92×4	5.3
42HP	12HP	14HP	16HP	50	380~415	342	456	86	97.3	25+30+35	/	17.2+20.1+24.5	0.92×5	5.3
44HP	12HP	16HP	16HP	50	380~415	342	456	92	103.5	25+35+35	/	17.2+24.5×2	0.92×5	5.5
46HP	14HP	16HP	16HP	50	380~415	342	456	96	107.5	30+35+35	/	20.1+24.5×2	0.92×6	5.5
48HP	16HP	16HP	16HP	50	380~415	342	456	102	113.7	35+35+35	/	24.5×3	0.92×6	5.7
50HP	16HP	16HP	18HP	50	380~415	342	456	104	116.0	35+35+40	/	24.5×2+29.7	0.92×6	6
52HP	16HP	18HP	18HP	50	380~415	342	456	106	118.3	35+40+40	/	24.5+29.7×2	0.92×6	6.3
54HP	18HP	18HP	18HP	50	380~415	342	456	108	120.6	40+40+40	/	29.7×3	0.92×6	6.6

Abbreviations:
MCA: Minimum Circuit Amps; TOCA: Total Over-current Amps; MFA: Maximum Fuse Amps; MSC: Maximum Starting Current (A); RLA: Rated Load Amps; FLA: Full Load Amps
Notes:
1. Units are suitable for use on electrical systems where voltage supplied to unit terminals is not below or above listed range limits. Maximum allowable voltage variation between phases is 2%.
2. Select wire size based on the value of MCA.
3. TOCA indicates the total overcurrent amps value of each OC set.
4. MFA is used to select overcurrent circuit breakers and residual-current circuit breakers.
5. MSC indicates the maximum current on compressor start-up in amps.
6. RLA is based on the following conditions: indoor temperature 27°C DB, 19°C WB; outdoor temperature 35°C DB.

Table 2-7.2: MS box electrical characteristics

Model	Power Supply[1]						Rated power
	Hz	Volts	Min. volts	Max. volts	MCA[2]	MFA	W
MS01	50	220~240	198	264	0.30	15	57
MS04	50	220~240	198	264	0.38	15	69
MS06	50	220~240	198	264	0.63	15	115
MS08	50	220~240	198	264	0.80	15	138
MS10	50	220~240	198	264	0.90	15	173
MS12	50	220~240	198	264	1.10	15	196

Notes:
1. Units are suitable for use on electrical systems where voltage supplied to unit terminals is not below or above listed range limits.
2. Select wire size based on the value of MCA.

8 Functional Components and Safety Devices

Table 2-8.1: Functional components and safety devices

Item			8-18HP V6R
Compressor	Discharge temperature switch		Off: 115 (±5) °C / On: 75 (±15) °C
	Compressor discharge pipe temperature sensor		90°C = 5kΩ ± 3%
	Crankcase heater		30W × 2
Inverter module	Inverter module temperature sensor		90°C = 5kΩ ± 5%
Fan motor	Safety thermostat	On	115°C
		Off	-
System	High pressure switch		Off: 4.4 (±0.1) MPa / On: 3.2 (±0.1) MPa
	High pressure sensor		Output voltage (V) = 1.1603 × P + 0.5 (where P is the discharge pressure in MPa)
	Heat exchanger temperature sensor		25°C = 10kΩ
	Outdoor ambient temperature sensor		25°C = 10kΩ

9 Capacity Tables

9.1 Cooling Capacity Tables

Table 2-9.1: 8HP cooling capacity

Combination (%) (Capacity index)	Outdoor temperature (°C DB)	Indoor temperature(°C DB/WB)													
		DB:22,WB:15		DB:23.3,WB:16		DB:25.8,WB:18		DB:27,WB:19		DB:28.2,WB:20		DB:30.7,WB:22		DB:32,WB:24	
		TC	PI	TC	PI	TC	PI	TC	PI	TC	PI	TC	PI	TC	PI
		kW	kW	kW	kW	kW	kW	kW	kW	kW	kW	kW	kW	kW	kW
130%	-5	20.16	2.10	22.40	2.35	26.88	2.81	29.12	3.16	31.36	3.58	35.84	4.33	40.32	5.05
	-2	20.16	2.11	22.40	2.36	26.88	2.81	29.12	3.19	31.36	3.61	35.84	4.38	40.32	5.13
	0	20.16	2.11	22.40	2.38	26.88	2.83	29.12	3.20	31.36	3.64	35.84	4.44	40.32	5.16
	2	20.16	2.11	22.40	2.39	26.88	2.83	29.12	3.23	31.36	3.65	35.84	4.44	40.32	5.19
	4	20.16	2.14	22.40	2.39	26.88	2.87	29.12	3.25	31.36	3.69	35.84	4.52	40.32	5.22
	6	20.16	2.14	22.40	2.40	26.88	2.90	29.12	3.28	31.36	3.72	35.84	4.59	40.32	5.26
	8	20.16	2.16	22.40	2.40	26.88	2.93	29.12	3.28	31.36	3.73	35.84	4.59	40.32	5.38
	10	20.16	2.16	22.40	2.40	26.88	2.95	29.12	3.43	31.36	3.85	35.84	4.62	40.32	5.38
	12	20.16	2.17	22.40	2.44	26.88	3.08	29.12	3.53	31.36	3.98	35.84	4.72	40.32	5.50
	14	20.16	2.18	22.40	2.52	26.88	3.31	29.12	3.73	31.36	4.01	35.84	4.77	40.32	5.52
	16	20.16	2.27	22.40	2.69	26.88	3.51	29.12	3.76	31.36	4.14	35.84	4.85	40.32	5.67
	18	20.16	2.50	22.40	3.04	26.88	3.53	29.12	3.86	31.36	4.17	35.84	4.94	40.32	5.86
	20	20.16	2.81	22.40	3.08	26.88	3.57	29.12	3.93	31.36	4.18	35.84	4.96	39.27	6.17
	21	20.16	2.84	22.40	3.10	26.88	3.69	29.12	4.02	31.36	4.34	35.84	5.07	38.70	6.17
	23	20.16	3.03	22.40	3.33	26.88	3.99	29.12	4.34	31.36	4.71	35.84	5.61	37.58	6.16
	25	20.16	3.27	22.40	3.61	26.88	4.32	29.12	4.70	31.36	5.08	35.84	6.12	36.42	6.18
	27	20.16	3.54	22.40	3.90	26.88	4.67	29.12	5.09	31.36	5.52	34.32	6.17	35.25	6.18
	29	20.16	3.82	22.40	4.21	26.88	5.05	29.12	5.49	31.36	5.97	33.11	6.16	34.14	6.17
	31	20.16	4.12	22.40	4.56	26.88	5.45	29.12	5.94	30.22	6.15	31.91	6.16	32.89	6.15
	33	20.16	4.46	22.40	4.91	26.88	5.90	28.13	6.15	28.90	6.15	30.74	6.20	31.45	6.17
	35	20.16	4.80	22.40	5.31	26.15	6.16	26.86	6.17	27.61	6.16	29.17	6.15	30.25	6.25
	37	20.16	5.18	22.40	5.72	24.87	6.18	25.53	6.17	26.32	6.17	27.75	6.16	28.83	6.26
	39	20.16	5.60	22.40	6.17	23.62	6.16	24.41	6.21	24.96	6.17	26.57	6.23	27.40	6.27
	41	20.16	6.02	21.06	6.17	22.44	6.18	23.13	6.21	23.67	6.16	25.17	6.22	25.95	6.27
	43	19.28	6.17	19.93	6.15	21.19	6.16	22.05	6.26	22.73	6.29	24.16	6.36	24.55	6.24
	45	18.24	6.18	18.82	6.15	20.12	6.21	20.77	6.24	21.40	6.27	22.80	6.33	23.06	6.23
	48	16.76	6.22	17.21	6.17	18.24	6.15	18.85	6.18	19.80	6.37	20.66	6.30	20.87	6.19
	50	15.64	6.17	16.23	6.19	16.22	5.81	16.74	5.84	16.85	5.73	17.47	5.64	16.50	5.25
	52	12.06	5.06	12.14	4.95	12.57	4.86	12.95	4.89	13.32	4.92	12.48	4.58	12.76	4.62
120%	-5	18.61	1.95	20.68	2.18	24.81	2.62	26.88	2.84	28.95	3.21	33.08	3.97	37.22	4.61
	-2	18.61	1.96	20.68	2.19	24.81	2.62	26.88	2.87	28.95	3.38	33.08	4.06	37.22	4.69
	0	18.61	1.98	20.68	2.20	24.81	2.63	26.88	2.96	28.95	3.40	33.08	4.10	37.22	4.71
	2	18.61	1.98	20.68	2.22	24.81	2.65	26.88	2.98	28.95	3.40	33.08	4.12	37.22	4.77
	4	18.61	1.99	20.68	2.22	24.81	2.71	26.88	2.98	28.95	3.43	33.08	4.20	37.22	4.81
	6	18.61	1.99	20.68	2.23	24.81	2.73	26.88	3.07	28.95	3.47	33.08	4.22	37.22	4.83
	8	18.61	2.00	20.68	2.24	24.81	2.74	26.88	3.11	28.95	3.49	33.08	4.27	37.22	4.85
	10	18.61	2.01	20.68	2.25	24.81	2.77	26.88	3.13	28.95	3.53	33.08	4.30	37.22	5.01
	12	18.61	2.03	20.68	2.28	24.81	2.87	26.88	3.20	28.95	3.72	33.08	4.31	37.22	5.01
	14	18.61	2.05	20.68	2.33	24.81	2.97	26.88	3.46	28.95	3.76	33.08	4.37	37.22	5.07
	16	18.61	2.10	20.68	2.49	24.81	3.29	26.88	3.52	28.95	3.77	33.08	4.47	37.22	5.21
	18	18.61	2.24	20.68	2.79	24.81	3.31	26.88	3.56	28.95	3.82	33.08	4.51	37.22	5.21
	20	18.61	2.65	20.68	2.88	24.81	3.37	26.88	3.60	28.95	3.91	33.08	4.54	37.22	5.50
	21	18.61	2.68	20.68	2.92	24.81	3.40	26.88	3.67	28.95	3.96	33.08	4.61	37.22	5.76
	23	18.61	2.80	20.68	3.09	24.81	3.67	26.88	3.98	28.95	4.29	33.08	4.95	37.22	6.33
	25	18.61	3.04	20.68	3.33	24.81	3.97	26.88	4.31	28.95	4.65	33.08	5.37	35.49	6.25
	27	18.61	3.28	20.68	3.60	24.81	4.29	26.88	4.65	28.95	5.04	33.08	5.87	34.41	6.26
	29	18.61	3.54	20.68	3.90	24.81	4.63	26.88	5.04	28.95	5.46	32.32	6.25	33.26	6.25
	31	18.61	3.83	20.68	4.21	24.81	5.02	26.88	5.45	28.95	5.90	31.21	6.26	32.22	6.28
	33	18.61	4.13	20.68	4.55	24.81	5.42	26.88	5.88	28.95	6.38	29.92	6.26	30.89	6.29
	35	18.61	4.47	20.68	4.91	24.81	5.85	26.88	6.39	27.11	6.26	28.72	6.27	29.57	6.31
	37	18.61	4.81	20.68	5.29	24.81	6.34	25.16	6.28	25.84	6.28	27.40	6.28	28.41	6.39
	39	18.61	5.19	20.68	5.71	23.28	6.26	23.93	6.26	24.71	6.30	26.02	6.29	26.66	6.25
	41	18.61	5.59	20.68	6.17	22.06	6.26	22.72	6.27	23.43	6.29	24.91	6.35	25.70	6.39
	43	18.61	6.03	19.70	6.27	21.01	6.30	21.50	6.25	22.16	6.28	23.57	6.34	24.33	6.38
	45	18.02	6.26	18.60	6.26	19.80	6.28	20.63	6.37	20.89	6.26	22.20	6.33	23.35	6.51
	48	16.51	6.25	17.16	6.31	18.20	6.29	18.78	6.32	19.75	6.50	20.62	6.43	20.86	6.31
	50	15.62	6.31	15.88	6.19	16.26	5.95	16.40	5.83	16.09	5.57	16.65	5.49	16.18	5.23
	52	11.86	5.06	12.30	5.09	12.36	4.85	12.73	4.88	13.10	4.91	12.30	4.57	12.59	4.61

Abbreviations:
CR: Combination ratio
TC: Total capacity (kW)
PI: Power input (compressor + outdoor fan motor) (kW)

Notes:
1.Shaded cells indicate rating condition.

Table continued on next page ...

Table 2-9.1: 8HP cooling capacity (continued)

Combination (%) (Capacity index)	Outdoor temperature (°C DB)	Indoor temperature(°C DB/WB)													
		DB:22,WB:15		DB:23.3,WB:16		DB:25.8,WB:18		DB:27,WB:19		DB:28.2,WB:20		DB:30.7,WB:22		DB:32,WB:24	
		TC	PI	TC	PI	TC	PI	TC	PI	TC	PI	TC	PI	TC	PI
		kW	kW	kW	kW	kW	kW	kW	kW	kW	kW	kW	kW	kW	kW
110%	-5	17.06	1.82	18.95	2.02	22.74	2.43	24.64	2.67	26.54	2.95	30.33	3.67	34.12	4.19
	-2	17.06	1.82	18.95	2.04	22.74	2.46	24.64	2.69	26.54	2.96	30.33	3.67	34.12	4.26
	0	17.06	1.83	18.95	2.05	22.74	2.46	24.64	2.69	26.54	3.01	30.33	3.73	34.12	4.28
	2	17.06	1.86	18.95	2.07	22.74	2.49	24.64	2.76	26.54	3.02	30.33	3.80	34.12	4.28
	4	17.06	1.86	18.95	2.08	22.74	2.53	24.64	2.79	26.54	3.09	30.33	3.81	34.12	4.37
	6	17.06	1.86	18.95	2.09	22.74	2.54	24.64	2.80	26.54	3.09	30.33	3.81	34.12	4.38
	8	17.06	1.86	18.95	2.09	22.74	2.54	24.64	2.85	26.54	3.15	30.33	3.84	34.12	4.45
	10	17.06	1.88	18.95	2.11	22.74	2.55	24.64	2.87	26.54	3.29	30.33	3.93	34.12	4.48
	12	17.06	1.89	18.95	2.13	22.74	2.68	24.64	2.87	26.54	3.30	30.33	3.96	34.12	4.60
	14	17.06	1.91	18.95	2.15	22.74	2.75	24.64	3.06	26.54	3.52	30.33	3.99	34.12	4.68
	16	17.06	1.93	18.95	2.23	22.74	3.02	24.64	3.31	26.54	3.53	30.33	4.00	34.12	4.68
	18	17.06	2.07	18.95	2.48	22.74	3.11	24.64	3.33	26.54	3.53	30.33	4.09	34.12	4.71
	20	17.06	2.50	18.95	2.70	22.74	3.14	24.64	3.36	26.54	3.57	30.33	4.17	34.12	4.84
	21	17.06	2.50	18.95	2.73	22.74	3.18	24.64	3.39	26.54	3.61	30.33	4.19	34.12	4.90
	23	17.06	2.58	18.95	2.84	22.74	3.35	24.64	3.61	26.54	3.89	30.33	4.45	34.12	5.36
	25	17.06	2.80	18.95	3.06	22.74	3.63	24.64	3.92	26.54	4.22	30.33	4.82	34.12	5.87
	27	17.06	3.03	18.95	3.32	22.74	3.93	24.64	4.25	26.54	4.56	30.33	5.23	34.12	6.45
	29	17.06	3.26	18.95	3.58	22.74	4.24	24.64	4.58	26.54	4.94	30.33	5.66	32.45	6.36
	31	17.06	3.53	18.95	3.87	22.74	4.59	24.64	4.96	26.54	5.36	30.33	6.15	31.33	6.36
	33	17.06	3.81	18.95	4.18	22.74	4.96	24.64	5.38	26.54	5.80	29.35	6.37	30.11	6.36
	35	17.06	4.11	18.95	4.51	22.74	5.36	24.64	5.80	26.54	6.26	27.99	6.35	28.83	6.36
	37	17.06	4.43	18.95	4.88	22.74	5.79	24.64	6.27	25.32	6.36	26.70	6.35	27.59	6.37
	39	17.06	4.79	18.95	5.26	22.74	6.25	23.53	6.38	24.10	6.35	25.44	6.35	26.27	6.37
	41	17.06	5.16	18.95	5.67	21.74	6.36	22.34	6.35	22.93	6.36	24.36	6.42	24.96	6.37
	43	17.06	5.54	18.95	6.11	20.58	6.35	21.15	6.35	21.90	6.42	23.30	6.47	23.65	6.36
	45	17.06	5.97	18.40	6.36	19.53	6.37	20.07	6.37	20.70	6.39	22.02	6.46	23.08	6.65
	48	16.36	6.37	16.85	6.35	17.92	6.36	18.67	6.46	19.25	6.49	20.48	6.56	19.88	6.16
	50	15.40	6.37	15.68	6.26	15.92	5.93	16.40	5.97	16.53	5.85	16.30	5.48	17.26	5.66
	52	11.66	5.05	12.08	5.08	12.53	4.99	12.09	4.73	12.87	4.90	12.12	4.56	12.40	4.60
100%	-5	15.51	1.67	17.23	1.85	20.68	2.26	22.40	2.46	24.12	2.68	27.57	3.30	31.02	3.86
	-2	15.51	1.67	17.23	1.86	20.68	2.26	22.40	2.46	24.12	2.69	27.57	3.30	31.02	3.87
	0	15.51	1.67	17.23	1.87	20.68	2.31	22.40	2.48	24.12	2.70	27.57	3.33	31.02	3.87
	2	15.51	1.68	17.23	1.88	20.68	2.32	22.40	2.48	24.12	2.72	27.57	3.37	31.02	3.89
	4	15.51	1.68	17.23	1.88	20.68	2.33	22.40	2.49	24.12	2.77	27.57	3.40	31.02	3.91
	6	15.51	1.69	17.23	1.92	20.68	2.34	22.40	2.53	24.12	2.80	27.57	3.47	31.02	3.97
	8	15.51	1.72	17.23	1.92	20.68	2.34	22.40	2.54	24.12	2.83	27.57	3.55	31.02	4.07
	10	15.51	1.73	17.23	1.93	20.68	2.37	22.40	2.56	24.12	2.87	27.57	3.64	31.02	4.08
	12	15.51	1.73	17.23	1.93	20.68	2.40	22.40	2.62	24.12	2.90	27.57	3.67	31.02	4.09
	14	15.51	1.76	17.23	1.95	20.68	2.49	22.40	2.71	24.12	3.12	27.57	3.70	31.02	4.17
	16	15.51	1.79	17.23	1.98	20.68	2.71	22.40	3.00	24.12	3.26	27.57	3.72	31.02	4.17
	18	15.51	1.83	17.23	2.20	20.68	2.91	22.40	3.09	24.12	3.29	27.57	3.74	31.02	4.31
	20	15.51	2.18	17.23	2.52	20.68	2.92	22.40	3.14	24.12	3.33	27.57	3.76	31.02	4.34
	21	15.51	2.33	17.23	2.54	20.68	2.94	22.40	3.15	24.12	3.35	27.57	3.84	31.02	4.51
	23	15.51	2.38	17.23	2.59	20.68	3.03	22.40	3.27	24.12	3.50	27.57	3.98	31.02	4.71
	25	15.51	2.56	17.23	2.79	20.68	3.28	22.40	3.55	24.12	3.80	27.57	4.32	31.02	5.09
	27	15.51	2.77	17.23	3.02	20.68	3.56	22.40	3.83	24.12	4.11	27.57	4.67	31.02	5.51
	29	15.51	2.99	17.23	3.27	20.68	3.85	22.40	4.15	24.12	4.45	27.57	5.06	31.02	6.00
	31	15.51	3.24	17.23	3.54	20.68	4.16	22.40	4.49	24.12	4.83	27.57	5.49	31.02	6.56
	33	15.51	3.49	17.23	3.82	20.68	4.49	22.40	4.85	24.12	5.21	27.57	5.94	29.40	6.45
	35	15.51	3.77	17.23	4.12	20.68	4.86	22.40	5.25	24.12	5.64	27.57	6.45	28.14	6.47
	37	15.51	4.07	17.23	4.45	20.68	5.24	22.40	5.66	24.12	6.10	26.16	6.45	26.97	6.50
	39	15.51	4.38	17.23	4.79	20.68	5.66	22.40	6.10	24.12	6.59	24.92	6.45	25.75	6.50
	41	15.51	4.72	17.23	5.17	20.68	6.10	22.40	6.59	22.50	6.46	23.79	6.47	24.52	6.50
	43	15.51	5.09	17.23	5.58	20.68	6.58	20.86	6.45	21.36	6.45	22.58	6.46	23.31	6.49
	45	15.51	5.48	17.23	5.99	19.25	6.48	19.77	6.47	20.28	6.45	21.56	6.52	22.05	6.48
	48	15.51	6.11	16.67	6.46	17.77	6.50	18.16	6.45	18.72	6.48	19.55	6.40	20.13	6.44
	50	15.51	6.57	15.40	6.29	15.53	5.93	15.67	5.80	15.77	5.69	16.34	5.61	16.41	5.50
	52	11.60	5.12	11.86	5.07	11.91	4.84	11.87	4.72	12.21	4.76	11.93	4.55	12.19	4.60

Abbreviations:
CR: Combination ratio
TC: Total capacity (kW)
PI: Power input (compressor + outdoor fan motor) (kW)

Notes:
1.Shaded cells indicate rating condition.

Table continued on next page ...

Table 2-9.1: 8HP cooling capacity (continued)

Combination (%) (Capacity index)	Outdoor temperature (°C DB)	Indoor temperature(°C DB/WB)													
		DB:22,WB:15		DB:23.3,WB:16		DB:25.8,WB:18		DB:27,WB:19		DB:28.2,WB:20		DB:30.7,WB:22		DB:32,WB:24	
		TC	PI	TC	PI	TC	PI	TC	PI	TC	PI	TC	PI	TC	PI
		kW	kW	kW	kW	kW	kW	kW	kW	kW	kW	kW	kW	kW	kW
90%	-5	13.96	1.46	15.51	1.67	18.61	2.03	20.16	2.18	21.71	2.35	24.81	2.89	27.91	3.31
	-2	13.96	1.49	15.51	1.68	18.61	2.05	20.16	2.18	21.71	2.39	24.81	2.90	27.91	3.36
	0	13.96	1.50	15.51	1.72	18.61	2.06	20.16	2.20	21.71	2.40	24.81	2.94	27.91	3.40
	2	13.96	1.50	15.51	1.73	18.61	2.06	20.16	2.21	21.71	2.40	24.81	2.97	27.91	3.42
	4	13.96	1.51	15.51	1.74	18.61	2.06	20.16	2.22	21.71	2.42	24.81	3.00	27.91	3.44
	6	13.96	1.52	15.51	1.74	18.61	2.08	20.16	2.23	21.71	2.46	24.81	3.04	27.91	3.44
	8	13.96	1.52	15.51	1.74	18.61	2.09	20.16	2.27	21.71	2.47	24.81	3.07	27.91	3.46
	10	13.96	1.53	15.51	1.76	18.61	2.11	20.16	2.28	21.71	2.53	24.81	3.09	27.91	3.53
	12	13.96	1.57	15.51	1.77	18.61	2.11	20.16	2.31	21.71	2.54	24.81	3.22	27.91	3.69
	14	13.96	1.57	15.51	1.77	18.61	2.18	20.16	2.41	21.71	2.68	24.81	3.32	27.91	3.71
	16	13.96	1.61	15.51	1.80	18.61	2.28	20.16	2.64	21.71	2.97	24.81	3.35	27.91	3.73
	18	13.96	1.66	15.51	1.85	18.61	2.64	20.16	2.84	21.71	2.98	24.81	3.36	27.91	3.74
	20	13.96	1.73	15.51	2.20	18.61	2.64	20.16	2.85	21.71	3.02	24.81	3.36	27.91	3.77
	21	13.96	2.00	15.51	2.29	18.61	2.66	20.16	2.86	21.71	3.04	24.81	3.38	27.91	3.89
	23	13.96	2.05	15.51	2.34	18.61	2.73	20.16	2.92	21.71	3.10	24.81	3.45	27.91	4.00
	25	13.96	2.16	15.51	2.47	18.61	2.88	20.16	3.09	21.71	3.31	24.81	3.71	27.91	4.33
	27	13.96	2.25	15.51	2.68	18.61	3.13	20.16	3.35	21.71	3.59	24.81	4.04	27.91	4.71
	29	13.96	2.40	15.51	2.90	18.61	3.38	20.16	3.63	21.71	3.88	24.81	4.38	27.91	5.10
	31	13.96	2.63	15.51	3.14	18.61	3.66	20.16	3.92	21.71	4.20	24.81	4.74	27.91	5.53
	33	13.96	2.99	15.51	3.39	18.61	3.95	20.16	4.24	21.71	4.55	24.81	5.12	27.91	6.00
	35	13.96	3.23	15.51	3.66	18.61	4.27	20.16	4.59	21.71	4.91	24.81	5.55	27.91	6.47
	37	13.96	3.49	15.51	3.95	18.61	4.61	20.16	4.95	21.71	5.31	24.81	6.01	26.45	6.47
	39	13.96	3.78	15.51	4.26	18.61	4.98	20.16	5.36	21.71	5.73	24.81	6.47	25.21	6.45
	41	13.96	4.08	15.51	4.59	18.61	5.38	20.16	5.78	21.71	6.18	23.40	6.47	24.08	6.48
	43	13.96	4.40	15.51	4.95	18.61	5.78	20.16	6.22	21.10	6.45	22.27	6.47	22.89	6.47
	45	13.96	4.75	15.51	5.33	18.61	6.23	19.50	6.45	20.04	6.47	21.21	6.50	21.72	6.45
	48	13.96	5.45	15.51	5.94	17.49	6.45	18.00	6.47	18.47	6.47	19.45	6.45	19.89	6.41
	50	13.96	5.85	15.51	6.39	15.70	6.06	15.69	5.87	16.00	5.82	15.79	5.45	15.84	5.34
	52	11.69	5.18	11.79	5.06	11.87	4.83	12.22	4.86	12.57	4.88	11.90	4.54	12.18	4.58
80%	-5	12.41	1.29	13.78	1.47	16.54	1.78	17.92	1.92	19.30	2.07	22.06	2.39	24.81	2.82
	-2	12.41	1.31	13.78	1.47	16.54	1.78	17.92	1.93	19.30	2.10	22.06	2.41	24.81	2.84
	0	12.41	1.33	13.78	1.48	16.54	1.79	17.92	1.94	19.30	2.10	22.06	2.43	24.81	2.85
	2	12.41	1.33	13.78	1.52	16.54	1.79	17.92	1.96	19.30	2.11	22.06	2.43	24.81	2.88
	4	12.41	1.33	13.78	1.53	16.54	1.80	17.92	1.97	19.30	2.13	22.06	2.46	24.81	2.91
	6	12.41	1.36	13.78	1.53	16.54	1.81	17.92	2.00	19.30	2.14	22.06	2.47	24.81	2.91
	8	12.41	1.36	13.78	1.53	16.54	1.81	17.92	2.01	19.30	2.14	22.06	2.47	24.81	2.94
	10	12.41	1.40	13.78	1.53	16.54	1.85	17.92	2.01	19.30	2.16	22.06	2.53	24.81	2.96
	12	12.41	1.41	13.78	1.59	16.54	1.85	17.92	2.05	19.30	2.21	22.06	2.63	24.81	3.23
	14	12.41	1.44	13.78	1.59	16.54	1.92	17.92	2.12	19.30	2.29	22.06	2.82	24.81	3.33
	16	12.41	1.45	13.78	1.61	16.54	1.93	17.92	2.26	19.30	2.50	22.06	3.01	24.81	3.35
	18	12.41	1.45	13.78	1.62	16.54	2.27	17.92	2.53	19.30	2.71	22.06	3.03	24.81	3.35
	20	12.41	1.56	13.78	1.87	16.54	2.38	17.92	2.55	19.30	2.71	22.06	3.04	24.81	3.37
	21	12.41	1.57	13.78	1.91	16.54	2.41	17.92	2.56	19.30	2.74	22.06	3.04	24.81	3.39
	23	12.41	1.59	13.78	2.08	16.54	2.44	17.92	2.61	19.30	2.77	22.06	3.11	24.81	3.44
	25	12.41	1.59	13.78	2.09	16.54	2.52	17.92	2.69	19.30	2.86	22.06	3.18	24.81	3.67
	27	12.41	1.76	13.78	2.10	16.54	2.72	17.92	2.91	19.30	3.10	22.06	3.46	24.81	3.99
	29	12.41	2.01	13.78	2.29	16.54	2.96	17.92	3.15	19.30	3.36	22.06	3.75	24.81	4.32
	31	12.41	2.20	13.78	2.56	16.54	3.20	17.92	3.42	19.30	3.64	22.06	4.06	24.81	4.69
	33	12.41	2.41	13.78	2.73	16.54	3.46	17.92	3.70	19.30	3.94	22.06	4.41	24.81	5.09
	35	12.41	2.65	13.78	2.98	16.54	3.74	17.92	4.00	19.30	4.26	22.06	4.77	24.81	5.49
	37	12.41	2.88	13.78	3.24	16.54	4.03	17.92	4.32	19.30	4.61	22.06	5.16	24.81	5.94
	39	12.41	3.14	13.78	3.63	16.54	4.36	17.92	4.65	19.30	4.96	22.06	5.56	24.81	6.42
	41	12.41	3.40	13.78	3.92	16.54	4.69	17.92	5.03	19.30	5.36	22.06	6.01	23.59	6.46
	43	12.41	3.69	13.78	4.23	16.54	5.06	17.92	5.41	19.30	5.78	22.06	6.48	22.44	6.46
	45	12.41	4.08	13.78	4.55	16.54	5.44	17.92	5.83	19.30	6.22	20.79	6.48	21.43	6.50
	48	12.41	4.59	13.78	5.09	16.54	6.07	17.92	6.51	18.18	6.46	19.17	6.47	19.70	6.47
	50	12.41	5.17	13.78	5.62	15.61	6.11	15.74	5.97	15.77	5.80	15.98	5.58	16.07	5.46
	52	11.69	5.22	11.76	5.08	12.15	4.95	12.13	4.84	12.49	4.87	12.33	4.66	12.15	4.56

Abbreviations:
CR: Combination ratio
TC: Total capacity (kW)
PI: Power input (compressor + outdoor fan motor) (kW)

Notes:
1.Shaded cells indicate rating condition.

Table continued on next page ...

Table 2-9.1: 8HP cooling capacity (continued)

Combination (%) (Capacity index)	Outdoor temperature (°C DB)	Indoor temperature(°C DB/WB)													
		DB:22,WB:15		DB:23.3,WB:16		DB:25.8,WB:18		DB:27,WB:19		DB:28.2,WB:20		DB:30.7,WB:22		DB:32,WB:24	
		TC	PI	TC	PI	TC	PI	TC	PI	TC	PI	TC	PI	TC	PI
		kW	kW	kW	kW	kW	kW	kW	kW	kW	kW	kW	kW	kW	kW
70%	-5	10.86	1.13	12.06	1.26	14.47	1.54	15.68	1.67	16.89	1.83	19.30	2.13	21.71	2.35
	-2	10.86	1.13	12.06	1.27	14.47	1.55	15.68	1.69	16.89	1.86	19.30	2.15	21.71	2.37
	0	10.86	1.14	12.06	1.28	14.47	1.56	15.68	1.72	16.89	1.87	19.30	2.16	21.71	2.38
	2	10.86	1.14	12.06	1.28	14.47	1.58	15.68	1.74	16.89	1.87	19.30	2.17	21.71	2.41
	4	10.86	1.14	12.06	1.30	14.47	1.58	15.68	1.75	16.89	1.88	19.30	2.18	21.71	2.42
	6	10.86	1.15	12.06	1.34	14.47	1.58	15.68	1.76	16.89	1.89	19.30	2.19	21.71	2.42
	8	10.86	1.15	12.06	1.36	14.47	1.60	15.68	1.77	16.89	1.91	19.30	2.22	21.71	2.50
	10	10.86	1.18	12.06	1.37	14.47	1.61	15.68	1.77	16.89	1.95	19.30	2.23	21.71	2.52
	12	10.86	1.19	12.06	1.37	14.47	1.65	15.68	1.82	16.89	1.95	19.30	2.25	21.71	2.60
	14	10.86	1.19	12.06	1.39	14.47	1.65	15.68	1.83	16.89	1.95	19.30	2.35	21.71	2.65
	16	10.86	1.22	12.06	1.40	14.47	1.67	15.68	1.90	16.89	2.06	19.30	2.62	21.71	2.97
	18	10.86	1.25	12.06	1.41	14.47	1.82	15.68	2.11	16.89	2.24	19.30	2.68	21.71	2.98
	20	10.86	1.26	12.06	1.42	14.47	2.10	15.68	2.26	16.89	2.38	19.30	2.69	21.71	2.98
	21	10.86	1.27	12.06	1.45	14.47	2.14	15.68	2.27	16.89	2.44	19.30	2.70	21.71	3.00
	23	10.86	1.29	12.06	1.63	14.47	2.17	15.68	2.31	16.89	2.47	19.30	2.74	21.71	3.03
	25	10.86	1.35	12.06	1.72	14.47	2.20	15.68	2.37	16.89	2.52	19.30	2.80	21.71	3.12
	27	10.86	1.46	12.06	1.72	14.47	2.23	15.68	2.51	16.89	2.65	19.30	2.94	21.71	3.36
	29	10.86	1.63	12.06	1.81	14.47	2.41	15.68	2.72	16.89	2.88	19.30	3.20	21.71	3.65
	31	10.86	1.81	12.06	2.01	14.47	2.63	15.68	2.95	16.89	3.13	19.30	3.47	21.71	3.95
	33	10.86	2.00	12.06	2.22	14.47	2.87	15.68	3.20	16.89	3.39	19.30	3.76	21.71	4.29
	35	10.86	2.21	12.06	2.44	14.47	3.11	15.68	3.46	16.89	3.67	19.30	4.07	21.71	4.64
	37	10.86	2.42	12.06	2.67	14.47	3.37	15.68	3.73	16.89	3.96	19.30	4.40	21.71	5.01
	39	10.86	2.64	12.06	2.92	14.47	3.64	15.68	4.03	16.89	4.27	19.30	4.75	21.71	5.40
	41	10.86	2.88	12.06	3.21	14.47	3.93	15.68	4.34	16.89	4.61	19.30	5.12	21.71	5.85
	43	10.86	3.14	12.06	3.49	14.47	4.41	15.68	4.68	16.89	4.97	19.30	5.52	21.71	6.29
	45	10.86	3.41	12.06	3.78	14.47	4.72	15.68	5.03	16.89	5.34	19.30	5.94	20.82	6.45
	48	10.86	3.86	12.06	4.25	14.47	5.26	15.68	5.61	16.89	5.96	18.76	6.45	19.31	6.46
	50	10.86	4.54	12.06	4.91	14.47	5.65	15.68	6.04	15.85	5.94	15.91	5.62	16.20	5.58
	52	10.86	4.87	11.81	5.15	12.01	4.94	12.02	4.82	12.36	4.85	12.23	4.63	12.55	4.67
60%	-5	9.30	0.92	10.34	1.06	12.41	1.30	13.44	1.42	14.47	1.54	16.54	1.77	18.61	2.01
	-2	9.30	0.94	10.34	1.06	12.41	1.32	13.44	1.44	14.47	1.54	16.54	1.79	18.61	2.04
	0	9.30	0.98	10.34	1.07	12.41	1.33	13.44	1.45	14.47	1.55	16.54	1.79	18.61	2.05
	2	9.30	1.00	10.34	1.08	12.41	1.37	13.44	1.45	14.47	1.55	16.54	1.80	18.61	2.05
	4	9.30	1.00	10.34	1.09	12.41	1.37	13.44	1.47	14.47	1.56	16.54	1.81	18.61	2.05
	6	9.30	1.01	10.34	1.11	12.41	1.37	13.44	1.48	14.47	1.56	16.54	1.85	18.61	2.09
	8	9.30	1.01	10.34	1.11	12.41	1.39	13.44	1.48	14.47	1.59	16.54	1.88	18.61	2.09
	10	9.30	1.02	10.34	1.12	12.41	1.39	13.44	1.49	14.47	1.63	16.54	1.89	18.61	2.10
	12	9.30	1.02	10.34	1.15	12.41	1.41	13.44	1.50	14.47	1.64	16.54	1.90	18.61	2.17
	14	9.30	1.03	10.34	1.16	12.41	1.42	13.44	1.51	14.47	1.65	16.54	1.93	18.61	2.26
	16	9.30	1.04	10.34	1.18	12.41	1.42	13.44	1.55	14.47	1.66	16.54	2.07	18.61	2.44
	18	9.30	1.07	10.34	1.19	12.41	1.45	13.44	1.64	14.47	1.82	16.54	2.32	18.61	2.57
	20	9.30	1.07	10.34	1.19	12.41	1.58	13.44	1.76	14.47	2.08	16.54	2.33	18.61	2.59
	21	9.30	1.07	10.34	1.22	12.41	1.61	13.44	1.96	14.47	2.09	16.54	2.35	18.61	2.60
	23	9.30	1.07	10.34	1.29	12.41	1.67	13.44	1.98	14.47	2.12	16.54	2.38	18.61	2.63
	25	9.30	1.07	10.34	1.29	12.41	1.77	13.44	1.98	14.47	2.17	16.54	2.43	18.61	2.70
	27	9.30	1.17	10.34	1.31	12.41	1.85	13.44	2.02	14.47	2.18	16.54	2.53	18.61	2.81
	29	9.30	1.33	10.34	1.47	12.41	1.88	13.44	2.06	14.47	2.32	16.54	2.70	18.61	3.05
	31	9.30	1.49	10.34	1.65	12.41	1.97	13.44	2.21	14.47	2.46	16.54	2.93	18.61	3.30
	33	9.30	1.66	10.34	1.83	12.41	2.25	13.44	2.43	14.47	2.68	16.54	3.19	18.61	3.58
	35	9.30	1.84	10.34	2.03	12.41	2.46	13.44	2.71	14.47	2.99	16.54	3.45	18.61	3.88
	37	9.30	2.03	10.34	2.23	12.41	2.67	13.44	2.94	14.47	3.24	16.54	3.72	18.61	4.19
	39	9.30	2.22	10.34	2.44	12.41	2.91	13.44	3.20	14.47	3.50	16.54	4.02	18.61	4.52
	41	9.30	2.43	10.34	2.66	12.41	3.17	13.44	3.46	14.47	3.79	16.54	4.33	18.61	4.87
	43	9.30	2.65	10.34	2.90	12.41	3.44	13.44	3.75	14.47	4.09	16.54	4.66	18.61	5.26
	45	9.30	2.88	10.34	3.15	12.41	3.73	13.44	4.05	14.47	4.57	16.54	5.02	18.61	5.66
	48	9.30	3.26	10.34	3.56	12.41	4.19	13.44	4.65	14.47	5.07	16.54	5.60	18.61	6.33
	50	9.30	3.78	10.34	4.24	12.41	4.84	13.44	5.14	14.47	5.44	15.94	5.78	16.16	5.69
	52	9.30	4.22	10.34	4.54	11.95	5.00	12.05	4.90	12.16	4.83	12.45	4.75	12.81	4.78

Abbreviations:
CR: Combination ratio
TC: Total capacity (kW)
PI: Power input (compressor + outdoor fan motor) (kW)

Notes:
Shaded cells indicate rating condition.

Table continued on next page ...

Table 2-9.1: 8HP cooling capacity (continued)

Combination (%) (Capacity index)	Outdoor temperature (°C DB)	Indoor temperature(°C DB/WB)													
		DB:22,WB:15		DB:23.3,WB:16		DB:25.8,WB:18		DB:27,WB:19		DB:28.2,WB:20		DB:30.7,WB:22		DB:32,WB:24	
		TC	PI	TC	PI	TC	PI	TC	PI	TC	PI	TC	PI	TC	PI
		kW	kW	kW	kW	kW	kW	kW	kW	kW	kW	kW	kW	kW	kW
50%	-5	7.75	0.77	8.62	0.86	10.34	1.06	11.20	1.17	12.06	1.28	13.78	1.45	15.51	1.66
	-2	7.75	0.78	8.62	0.90	10.34	1.07	11.20	1.18	12.06	1.29	13.78	1.47	15.51	1.68
	0	7.75	0.79	8.62	0.90	10.34	1.09	11.20	1.19	12.06	1.30	13.78	1.47	15.51	1.68
	2	7.75	0.81	8.62	0.90	10.34	1.09	11.20	1.20	12.06	1.31	13.78	1.48	15.51	1.68
	4	7.75	0.82	8.62	0.92	10.34	1.10	11.20	1.21	12.06	1.31	13.78	1.51	15.51	1.74
	6	7.75	0.83	8.62	0.92	10.34	1.10	11.20	1.22	12.06	1.33	13.78	1.52	15.51	1.74
	8	7.75	0.84	8.62	0.93	10.34	1.11	11.20	1.26	12.06	1.34	13.78	1.54	15.51	1.76
	10	7.75	0.84	8.62	0.93	10.34	1.12	11.20	1.28	12.06	1.35	13.78	1.55	15.51	1.77
	12	7.75	0.84	8.62	0.94	10.34	1.13	11.20	1.29	12.06	1.35	13.78	1.58	15.51	1.77
	14	7.75	0.85	8.62	0.97	10.34	1.14	11.20	1.29	12.06	1.40	13.78	1.59	15.51	1.82
	16	7.75	0.85	8.62	0.98	10.34	1.15	11.20	1.29	12.06	1.43	13.78	1.60	15.51	1.92
	18	7.75	0.86	8.62	0.98	10.34	1.21	11.20	1.32	12.06	1.43	13.78	1.73	15.51	2.18
	20	7.75	0.88	8.62	0.98	10.34	1.22	11.20	1.38	12.06	1.49	13.78	1.93	15.51	2.20
	21	7.75	0.88	8.62	1.00	10.34	1.25	11.20	1.45	12.06	1.63	13.78	2.00	15.51	2.20
	23	7.75	0.88	8.62	1.01	10.34	1.30	11.20	1.50	12.06	1.67	13.78	2.03	15.51	2.23
	25	7.75	0.91	8.62	1.01	10.34	1.31	11.20	1.51	12.06	1.80	13.78	2.03	15.51	2.31
	27	7.75	0.99	8.62	1.05	10.34	1.39	11.20	1.55	12.06	1.81	13.78	2.07	15.51	2.38
	29	7.75	1.10	8.62	1.18	10.34	1.55	11.20	1.70	12.06	1.82	13.78	2.14	15.51	2.51
	31	7.75	1.23	8.62	1.32	10.34	1.57	11.20	1.71	12.06	1.82	13.78	2.14	15.51	2.73
	33	7.75	1.36	8.62	1.47	10.34	1.75	11.20	1.89	12.06	2.02	13.78	2.35	15.51	2.98
	35	7.75	1.51	8.62	1.64	10.34	1.94	11.20	2.09	12.06	2.23	13.78	2.62	15.51	3.21
	37	7.75	1.66	8.62	1.81	10.34	2.14	11.20	2.29	12.06	2.45	13.78	2.86	15.51	3.47
	39	7.75	1.82	8.62	2.00	10.34	2.34	11.20	2.51	12.06	2.68	13.78	3.11	15.51	3.74
	41	7.75	2.00	8.62	2.19	10.34	2.56	11.20	2.75	12.06	2.93	13.78	3.38	15.51	4.03
	43	7.75	2.18	8.62	2.39	10.34	2.79	11.20	2.99	12.06	3.24	13.78	3.66	15.51	4.34
	45	7.75	2.38	8.62	2.60	10.34	3.03	11.20	3.24	12.06	3.49	13.78	4.08	15.51	4.67
	48	7.75	2.70	8.62	2.94	10.34	3.42	11.20	3.65	12.06	3.93	13.78	4.54	15.51	5.20
	50	7.75	2.93	8.62	3.27	10.34	4.09	11.20	4.32	12.06	4.56	13.78	5.00	15.51	5.58
	52	7.75	3.61	8.62	3.87	10.34	4.38	11.20	4.64	12.06	4.89	12.21	4.73	12.32	4.68

Abbreviations:
CR: Combination ratio
TC: Total capacity (kW)
PI: Power input (compressor + outdoor fan motor) (kW)

Notes:
Shaded cells indicate rating condition.

Table 2-9.2: 10HP cooling capacity

Combination (%) (Capacity index)	Outdoor temperature (°C DB)	Indoor temperature(°C DB/WB)													
		DB:22,WB:15		DB:23.3,WB:16		DB:25.8,WB:18		DB:27,WB:19		DB:28.2,WB:20		DB:30.7,WB:22		DB:32,WB:24	
		TC	PI	TC	PI	TC	PI	TC	PI	TC	PI	TC	PI	TC	PI
		kW	kW	kW	kW	kW	kW	kW	kW	kW	kW	kW	kW	kW	kW
130%	-5	25.20	2.54	28.00	2.81	33.60	3.53	36.40	3.93	39.20	4.45	44.80	5.35	50.40	6.12
	-2	25.20	2.54	28.00	2.82	33.60	3.56	36.40	3.95	39.20	4.54	44.80	5.45	50.40	6.23
	0	25.20	2.54	28.00	2.83	33.60	3.64	36.40	4.01	39.20	4.54	44.80	5.45	50.40	6.25
	2	25.20	2.55	28.00	2.85	33.60	3.68	36.40	4.10	39.20	4.58	44.80	5.55	50.40	6.35
	4	25.20	2.57	28.00	2.85	33.60	3.69	36.40	4.13	39.20	4.59	44.80	5.62	50.40	6.53
	6	25.20	2.57	28.00	2.87	33.60	3.70	36.40	4.22	39.20	4.60	44.80	5.72	50.40	6.67
	8	25.20	2.58	28.00	2.88	33.60	3.75	36.40	4.26	39.20	4.77	44.80	5.92	50.40	7.05
	10	25.20	2.61	28.00	2.92	33.60	3.77	36.40	4.42	39.20	4.95	44.80	6.13	50.40	7.54
	12	25.20	2.64	28.00	2.98	33.60	4.03	36.40	4.71	39.20	5.26	44.80	6.17	50.40	8.11
	14	25.20	2.71	28.00	3.09	33.60	4.28	36.40	4.76	39.20	5.26	44.80	6.65	48.74	8.18
	16	25.20	2.87	28.00	3.41	33.60	4.33	36.40	4.99	39.20	5.69	44.80	7.16	47.48	8.17
	18	25.20	3.32	28.00	3.76	33.60	4.71	36.40	5.41	39.20	6.16	44.80	7.71	46.32	8.17
	20	25.20	3.64	28.00	4.04	33.60	5.12	36.40	5.89	39.20	6.64	44.80	8.30	45.03	8.18
	21	25.20	3.76	28.00	4.19	33.60	5.36	36.40	6.13	39.20	6.91	43.38	8.16	44.40	8.17
	23	25.20	4.05	28.00	4.51	33.60	5.82	36.40	6.60	39.20	7.44	42.16	8.16	43.22	8.19
	25	25.20	4.36	28.00	4.86	33.60	6.32	36.40	7.16	39.20	8.03	40.85	8.18	41.91	8.18
	27	25.20	4.69	28.00	5.25	33.60	6.85	36.40	7.73	37.74	8.17	39.57	8.18	40.63	8.19
	29	25.20	5.07	28.00	5.69	33.60	7.40	36.40	8.35	36.48	8.18	38.32	8.20	39.33	8.19
	31	25.20	5.46	28.00	6.18	33.60	8.01	34.41	8.19	35.23	8.18	37.11	8.20	38.10	8.28
	33	25.20	5.88	28.00	6.71	32.35	8.17	33.18	8.20	33.92	8.16	35.82	8.21	36.79	8.28
	35	25.20	6.35	28.00	7.27	31.08	8.17	31.94	8.21	32.77	8.19	34.51	8.21	35.48	8.28
	37	25.20	6.89	28.00	7.89	29.86	8.18	30.64	8.18	31.51	8.19	33.18	8.22	34.17	8.27
	39	25.20	7.47	27.14	8.18	28.66	8.18	29.53	8.21	30.25	8.19	31.88	8.21	33.17	8.43
	41	25.20	8.07	25.96	8.21	27.60	8.25	28.28	8.20	29.09	8.26	30.59	8.20	31.86	8.42
	43	23.98	8.17	24.74	8.17	26.38	8.24	27.02	8.20	27.84	8.25	29.34	8.17	30.27	8.23
	45	22.89	8.19	23.62	8.18	25.17	8.22	25.51	8.01	25.72	7.72	26.31	7.36	26.76	7.27
	48	19.35	7.22	19.41	6.96	20.14	6.73	19.67	6.33	20.32	6.37	20.37	6.02	21.05	6.06
	50	15.51	6.03	15.79	5.91	15.80	5.54	16.72	5.72	15.96	5.34	17.01	5.41	15.97	5.03
	52	11.47	4.85	12.33	5.01	11.96	4.66	12.34	4.69	12.71	4.73	11.81	4.40	12.09	4.44
120%	-5	23.26	2.37	25.85	2.62	31.02	3.30	33.60	3.70	36.18	4.13	41.35	4.98	46.52	5.71
	-2	23.26	2.38	25.85	2.63	31.02	3.30	33.60	3.73	36.18	4.14	41.35	5.05	46.52	5.76
	0	23.26	2.39	25.85	2.64	31.02	3.30	33.60	3.74	36.18	4.15	41.35	5.11	46.52	5.83
	2	23.26	2.39	25.85	2.66	31.02	3.31	33.60	3.75	36.18	4.17	41.35	5.12	46.52	5.84
	4	23.26	2.40	25.85	2.67	31.02	3.32	33.60	3.76	36.18	4.22	41.35	5.19	46.52	5.91
	6	23.26	2.40	25.85	2.68	31.02	3.32	33.60	3.84	36.18	4.29	41.35	5.22	46.52	6.12
	8	23.26	2.42	25.85	2.71	31.02	3.40	33.60	3.88	36.18	4.38	41.35	5.44	46.52	6.33
	10	23.26	2.42	25.85	2.71	31.02	3.52	33.60	4.00	36.18	4.55	41.35	5.63	46.52	6.50
	12	23.26	2.47	25.85	2.77	31.02	3.64	33.60	4.17	36.18	4.79	41.35	5.72	46.52	6.99
	14	23.26	2.51	25.85	2.88	31.02	3.88	33.60	4.30	36.18	4.83	41.35	5.76	46.52	7.49
	16	23.26	2.62	25.85	3.07	31.02	3.98	33.60	4.45	36.18	4.93	41.35	6.18	46.52	8.05
	18	23.26	2.96	25.85	3.49	31.02	4.18	33.60	4.68	36.18	5.33	41.35	6.68	45.30	8.32
	20	23.26	3.34	25.85	3.71	31.02	4.50	33.60	5.11	36.18	5.79	41.35	7.20	44.08	8.32
	21	23.26	3.46	25.85	3.84	31.02	4.67	33.60	5.34	36.18	6.03	41.35	7.50	43.45	8.32
	23	23.26	3.73	25.85	4.13	31.02	5.10	33.60	5.80	36.18	6.54	41.35	8.09	42.25	8.32
	25	23.26	4.01	25.85	4.46	31.02	5.55	33.60	6.30	36.18	7.09	40.06	8.32	40.99	8.33
	27	23.26	4.32	25.85	4.80	31.02	6.04	33.60	6.81	36.18	7.67	38.76	8.30	39.77	8.30
	29	23.26	4.66	25.85	5.18	31.02	6.56	33.60	7.41	36.18	8.26	37.56	8.30	38.53	8.31
	31	23.26	5.01	25.85	5.58	31.02	7.12	33.60	8.00	34.63	8.32	36.29	8.30	37.27	8.32
	33	23.26	5.40	25.85	6.04	31.02	7.71	32.64	8.31	33.36	8.30	35.15	8.34	36.01	8.32
	35	23.26	5.83	25.85	6.54	31.02	8.36	31.41	8.34	32.16	8.31	33.90	8.34	34.82	8.41
	37	23.26	6.29	25.85	7.09	29.37	8.30	30.18	8.31	30.95	8.33	32.65	8.34	33.56	8.41
	39	23.26	6.76	25.85	7.69	28.26	8.30	28.98	8.32	29.78	8.33	31.36	8.35	32.29	8.41
	41	23.26	7.32	25.85	8.33	27.04	8.32	27.89	8.36	28.56	8.32	30.11	8.35	31.06	8.39
	43	23.26	7.92	24.47	8.30	25.91	8.30	26.69	8.34	27.35	8.31	28.86	8.33	29.80	8.38
	45	22.67	8.31	23.33	8.30	24.87	8.36	25.21	8.16	25.42	7.87	26.04	7.50	25.79	7.09
	48	19.13	7.28	19.20	7.02	20.07	6.87	19.63	6.48	20.27	6.51	19.98	6.01	20.64	6.05
	50	15.28	6.02	15.89	6.04	15.52	5.55	16.04	5.58	15.72	5.33	16.75	5.40	15.75	5.02
	52	11.35	4.85	11.80	4.88	11.84	4.66	12.21	4.69	12.58	4.72	11.72	4.39	12.00	4.44

Abbreviations:
CR: Combination ratio
TC: Total capacity (kW)
PI: Power input (compressor + outdoor fan motor) (kW)

Notes:
1.Shaded cells indicate rating condition.

Table continued on next page ...

Table 2-9.2: 10HP cooling capacity (continued)

Combination (%) (Capacity index)	Outdoor temperature (°C DB)	Indoor temperature(°C DB/WB)													
		DB:22,WB:15		DB:23.3,WB:16		DB:25.8,WB:18		DB:27,WB:19		DB:28.2,WB:20		DB:30.7,WB:22		DB:32,WB:24	
		TC	PI	TC	PI	TC	PI	TC	PI	TC	PI	TC	PI	TC	PI
		kW	kW	kW	kW	kW	kW	kW	kW	kW	kW	kW	kW	kW	kW
110%	-5	21.32	2.20	23.69	2.44	28.43	2.92	30.80	3.29	33.17	3.70	37.91	4.57	42.65	5.19
	-2	21.32	2.21	23.69	2.45	28.43	2.93	30.80	3.32	33.17	3.72	37.91	4.65	42.65	5.24
	0	21.32	2.21	23.69	2.46	28.43	2.95	30.80	3.33	33.17	3.75	37.91	4.66	42.65	5.32
	2	21.32	2.21	23.69	2.46	28.43	2.96	30.80	3.34	33.17	3.82	37.91	4.66	42.65	5.34
	4	21.32	2.22	23.69	2.46	28.43	2.96	30.80	3.34	33.17	3.84	37.91	4.71	42.65	5.42
	6	21.32	2.23	23.69	2.47	28.43	3.02	30.80	3.44	33.17	3.87	37.91	4.81	42.65	5.47
	8	21.32	2.23	23.69	2.48	28.43	3.04	30.80	3.49	33.17	3.99	37.91	4.86	42.65	5.69
	10	21.32	2.25	23.69	2.49	28.43	3.08	30.80	3.58	33.17	4.14	37.91	5.09	42.65	5.92
	12	21.32	2.25	23.69	2.59	28.43	3.19	30.80	3.77	33.17	4.29	37.91	5.16	42.65	5.99
	14	21.32	2.30	23.69	2.63	28.43	3.40	30.80	3.96	33.17	4.31	37.91	5.24	42.65	6.39
	16	21.32	2.38	23.69	2.82	28.43	3.72	30.80	4.03	33.17	4.45	37.91	5.25	42.65	6.87
	18	21.32	2.63	23.69	3.26	28.43	3.77	30.80	4.12	33.17	4.55	37.91	5.69	42.65	7.42
	20	21.32	3.06	23.69	3.38	28.43	4.05	30.80	4.42	33.17	4.94	37.91	6.19	42.65	7.98
	21	21.32	3.17	23.69	3.50	28.43	4.20	30.80	4.61	33.17	5.17	37.91	6.45	42.65	8.27
	23	21.32	3.41	23.69	3.76	28.43	4.54	30.80	5.00	33.17	5.64	37.91	6.98	41.29	8.45
	25	21.32	3.67	23.69	4.05	28.43	4.89	30.80	5.46	33.17	6.12	37.91	7.55	40.10	8.46
	27	21.32	3.95	23.69	4.36	28.43	5.29	30.80	5.96	33.17	6.67	37.91	8.17	38.87	8.44
	29	21.32	4.26	23.69	4.72	28.43	5.74	30.80	6.45	33.17	7.23	36.79	8.45	37.67	8.45
	31	21.32	4.59	23.69	5.09	28.43	6.24	30.80	7.03	33.17	7.84	35.51	8.43	36.46	8.44
	33	21.32	4.95	23.69	5.49	28.43	6.78	30.80	7.62	33.17	8.50	34.32	8.44	35.25	8.45
	35	21.32	5.32	23.69	5.92	28.43	7.38	30.80	8.26	31.57	8.45	33.15	8.45	34.03	8.46
	37	21.32	5.73	23.69	6.36	28.43	7.99	29.59	8.43	30.35	8.43	32.03	8.47	32.82	8.46
	39	21.32	6.18	23.69	6.85	27.75	8.43	28.46	8.44	29.18	8.44	30.82	8.48	31.68	8.55
	41	21.32	6.66	23.69	7.44	26.61	8.44	27.29	8.44	28.09	8.46	29.61	8.48	30.46	8.54
	43	21.32	7.17	23.69	8.06	25.53	8.44	26.14	8.43	26.92	8.45	28.38	8.48	28.98	8.36
	45	21.32	7.70	23.00	8.43	24.38	8.44	24.87	8.30	25.08	8.01	25.40	7.48	25.48	7.23
	48	18.90	7.36	19.11	7.16	19.31	6.72	19.58	6.61	19.88	6.49	20.01	6.13	20.22	6.03
	50	15.35	6.15	15.25	5.91	15.63	5.68	15.37	5.43	15.47	5.32	16.47	5.39	16.99	5.43
	52	11.57	4.98	11.67	4.87	11.71	4.65	12.08	4.68	12.44	4.71	11.62	4.39	11.89	4.43
100%	-5	19.38	2.02	21.54	2.24	25.85	2.67	28.00	2.91	30.15	3.28	34.46	4.09	38.77	4.75
	-2	19.38	2.03	21.54	2.25	25.85	2.70	28.00	2.95	30.15	3.29	34.46	4.15	38.77	4.80
	0	19.38	2.03	21.54	2.26	25.85	2.71	28.00	3.04	30.15	3.30	34.46	4.16	38.77	4.81
	2	19.38	2.03	21.54	2.26	25.85	2.72	28.00	3.05	30.15	3.40	34.46	4.19	38.77	4.83
	4	19.38	2.03	21.54	2.27	25.85	2.75	28.00	3.05	30.15	3.43	34.46	4.23	38.77	4.92
	6	19.38	2.04	21.54	2.27	25.85	2.76	28.00	3.09	30.15	3.44	34.46	4.23	38.77	4.96
	8	19.38	2.05	21.54	2.27	25.85	2.77	28.00	3.14	30.15	3.47	34.46	4.39	38.77	5.16
	10	19.38	2.05	21.54	2.28	25.85	2.82	28.00	3.15	30.15	3.52	34.46	4.52	38.77	5.29
	12	19.38	2.05	21.54	2.32	25.85	2.87	28.00	3.25	30.15	3.74	34.46	4.56	38.77	5.34
	14	19.38	2.08	21.54	2.36	25.85	3.04	28.00	3.50	30.15	3.93	34.46	4.69	38.77	5.41
	16	19.38	2.17	21.54	2.52	25.85	3.47	28.00	3.69	30.15	3.97	34.46	4.71	38.77	5.73
	18	19.38	2.32	21.54	2.87	25.85	3.49	28.00	3.74	30.15	4.13	34.46	4.82	38.77	6.21
	20	19.38	2.82	21.54	3.06	25.85	3.63	28.00	3.94	30.15	4.27	34.46	5.17	38.77	6.71
	21	19.38	2.88	21.54	3.16	25.85	3.78	28.00	4.10	30.15	4.45	34.46	5.41	38.77	6.99
	23	19.38	3.09	21.54	3.40	25.85	4.07	28.00	4.42	30.15	4.80	34.46	5.88	38.77	7.56
	25	19.38	3.33	21.54	3.67	25.85	4.38	28.00	4.78	30.15	5.19	34.46	6.41	38.77	8.13
	27	19.38	3.59	21.54	3.95	25.85	4.74	28.00	5.15	30.15	5.69	34.46	6.96	37.90	8.58
	29	19.38	3.86	21.54	4.26	25.85	5.12	28.00	5.56	30.15	6.19	34.46	7.56	36.71	8.57
	31	19.38	4.16	21.54	4.59	25.85	5.52	28.00	6.06	30.15	6.76	34.46	8.18	35.60	8.58
	33	19.38	4.49	21.54	4.96	25.85	5.94	28.00	6.59	30.15	7.33	33.63	8.57	34.41	8.60
	35	19.38	4.84	21.54	5.34	25.85	6.41	28.00	7.18	30.15	7.96	32.41	8.57	33.25	8.57
	37	19.38	5.20	21.54	5.75	25.85	7.00	28.00	7.76	30.15	8.63	31.20	8.57	32.08	8.59
	39	19.38	5.61	21.54	6.20	25.85	7.59	28.00	8.46	28.58	8.57	30.10	8.61	30.91	8.59
	41	19.38	6.04	21.54	6.68	25.85	8.25	26.83	8.59	27.48	8.57	29.02	8.61	29.75	8.59
	43	19.38	6.50	21.54	7.17	25.08	8.59	25.70	8.57	26.35	8.57	27.87	8.61	28.66	8.67
	45	19.38	6.99	21.54	7.75	23.99	8.58	24.54	8.53	24.67	8.15	25.01	7.61	25.12	7.36
	48	18.70	7.46	18.81	7.23	19.19	6.85	19.16	6.59	19.77	6.62	19.92	6.27	20.20	6.15
	50	15.04	6.15	15.31	6.03	15.70	5.81	15.85	5.70	15.58	5.45	16.17	5.37	16.68	5.41
	52	11.76	5.11	11.87	5.00	11.57	4.64	11.93	4.67	12.28	4.70	11.51	4.38	11.78	4.42

Abbreviations:
CR: Combination ratio
TC: Total capacity (kW)
PI: Power input (compressor + outdoor fan motor) (kW)

Notes:
1.Shaded cells indicate rating condition.

Table continued on next page ...

Table 2-9.2: 10HP cooling capacity (continued)

Combination (%) (Capacity index)	Outdoor temperature (°C DB)	Indoor temperature(°C DB/WB)													
		DB:22,WB:15		DB:23.3,WB:16		DB:25.8,WB:18		DB:27,WB:19		DB:28.2,WB:20		DB:30.7,WB:22		DB:32,WB:24	
		TC	PI	TC	PI	TC	PI	TC	PI	TC	PI	TC	PI	TC	PI
		kW	kW	kW	kW	kW	kW	kW	kW	kW	kW	kW	kW	kW	kW
90%	-5	17.45	1.79	19.38	2.01	23.26	2.42	25.20	2.62	27.14	2.94	31.02	3.50	34.89	4.12
	-2	17.45	1.80	19.38	2.02	23.26	2.43	25.20	2.63	27.14	2.95	31.02	3.63	34.89	4.22
	0	17.45	1.80	19.38	2.02	23.26	2.44	25.20	2.66	27.14	2.95	31.02	3.65	34.89	4.23
	2	17.45	1.81	19.38	2.02	23.26	2.44	25.20	2.66	27.14	2.96	31.02	3.67	34.89	4.23
	4	17.45	1.82	19.38	2.04	23.26	2.46	25.20	2.66	27.14	2.96	31.02	3.67	34.89	4.23
	6	17.45	1.83	19.38	2.04	23.26	2.47	25.20	2.68	27.14	3.01	31.02	3.71	34.89	4.28
	8	17.45	1.85	19.38	2.06	23.26	2.49	25.20	2.70	27.14	3.05	31.02	3.75	34.89	4.44
	10	17.45	1.85	19.38	2.08	23.26	2.53	25.20	2.73	27.14	3.06	31.02	3.90	34.89	4.54
	12	17.45	1.91	19.38	2.09	23.26	2.57	25.20	2.82	27.14	3.16	31.02	3.97	34.89	4.61
	14	17.45	1.92	19.38	2.09	23.26	2.68	25.20	2.94	27.14	3.42	31.02	4.03	34.89	4.71
	16	17.45	1.92	19.38	2.18	23.26	2.96	25.20	3.36	27.14	3.57	31.02	4.17	34.89	4.78
	18	17.45	2.00	19.38	2.39	23.26	3.16	25.20	3.39	27.14	3.59	31.02	4.18	34.89	4.87
	20	17.45	2.32	19.38	2.77	23.26	3.21	25.20	3.43	27.14	3.66	31.02	4.22	34.89	5.21
	21	17.45	2.58	19.38	2.80	23.26	3.26	25.20	3.53	27.14	3.80	31.02	4.34	34.89	5.46
	23	17.45	2.72	19.38	2.97	23.26	3.52	25.20	3.81	27.14	4.10	31.02	4.70	34.89	5.96
	25	17.45	2.93	19.38	3.21	23.26	3.80	25.20	4.11	27.14	4.43	31.02	5.08	34.89	6.49
	27	17.45	3.17	19.38	3.46	23.26	4.10	25.20	4.43	27.14	4.79	31.02	5.52	34.89	7.06
	29	17.45	3.40	19.38	3.73	23.26	4.42	25.20	4.79	27.14	5.17	31.02	6.05	34.89	7.64
	31	17.45	3.67	19.38	4.02	23.26	4.78	25.20	5.18	27.14	5.57	31.02	6.62	34.89	8.28
	33	17.45	3.95	19.38	4.34	23.26	5.15	25.20	5.58	27.14	6.04	31.02	7.21	33.83	8.57
	35	17.45	4.25	19.38	4.67	23.26	5.55	25.20	6.02	27.14	6.52	31.02	7.81	32.71	8.60
	37	17.45	4.59	19.38	5.04	23.26	5.99	25.20	6.51	27.14	7.11	31.02	8.51	31.50	8.56
	39	17.45	4.93	19.38	5.41	23.26	6.45	25.20	7.03	27.14	7.73	29.66	8.60	30.37	8.57
	41	17.45	5.31	19.38	5.84	23.26	6.95	25.20	7.63	27.14	8.40	28.54	8.61	29.37	8.63
	43	17.45	5.72	19.38	6.29	23.26	7.51	25.20	8.29	26.08	8.57	27.42	8.60	28.25	8.62
	45	17.45	6.15	19.38	6.76	23.26	8.14	24.32	8.56	24.74	8.42	24.99	7.73	25.12	7.48
	48	17.45	6.85	18.89	7.34	19.15	6.91	19.29	6.72	19.58	6.61	20.14	6.38	19.59	6.00
	50	15.16	6.23	15.22	6.03	15.64	5.80	15.42	5.55	15.90	5.58	15.67	5.23	16.61	5.40
	52	11.45	4.97	11.54	4.86	11.98	4.77	11.96	4.66	12.32	4.69	11.58	4.37	11.86	4.41
80%	-5	15.51	1.57	17.23	1.79	20.68	2.15	22.40	2.31	24.12	2.48	27.57	2.94	31.02	3.54
	-2	15.51	1.59	17.23	1.79	20.68	2.19	22.40	2.33	24.12	2.51	27.57	3.08	31.02	3.61
	0	15.51	1.59	17.23	1.80	20.68	2.19	22.40	2.36	24.12	2.52	27.57	3.13	31.02	3.62
	2	15.51	1.62	17.23	1.81	20.68	2.19	22.40	2.37	24.12	2.54	27.57	3.15	31.02	3.64
	4	15.51	1.62	17.23	1.81	20.68	2.21	22.40	2.40	24.12	2.54	27.57	3.19	31.02	3.67
	6	15.51	1.62	17.23	1.81	20.68	2.21	22.40	2.42	24.12	2.55	27.57	3.21	31.02	3.76
	8	15.51	1.62	17.23	1.81	20.68	2.23	22.40	2.43	24.12	2.59	27.57	3.25	31.02	3.80
	10	15.51	1.64	17.23	1.85	20.68	2.24	22.40	2.43	24.12	2.61	27.57	3.31	31.02	3.89
	12	15.51	1.66	17.23	1.86	20.68	2.30	22.40	2.46	24.12	2.72	27.57	3.42	31.02	3.97
	14	15.51	1.66	17.23	1.87	20.68	2.31	22.40	2.61	24.12	2.88	27.57	3.59	31.02	4.04
	16	15.51	1.74	17.23	1.92	20.68	2.45	22.40	2.88	24.12	3.21	27.57	3.61	31.02	4.05
	18	15.51	1.76	17.23	2.04	20.68	2.83	22.40	3.03	24.12	3.22	27.57	3.63	31.02	4.13
	20	15.51	1.95	17.23	2.50	20.68	2.87	22.40	3.07	24.12	3.26	27.57	3.65	31.02	4.19
	21	15.51	2.22	17.23	2.50	20.68	2.89	22.40	3.09	24.12	3.29	27.57	3.77	31.02	4.29
	23	15.51	2.38	17.23	2.58	20.68	3.02	22.40	3.25	24.12	3.48	27.57	3.94	31.02	4.65
	25	15.51	2.56	17.23	2.79	20.68	3.26	22.40	3.51	24.12	3.76	27.57	4.26	31.02	5.01
	27	15.51	2.77	17.23	3.01	20.68	3.52	22.40	3.78	24.12	4.06	27.57	4.60	31.02	5.43
	29	15.51	2.98	17.23	3.24	20.68	3.80	22.40	4.09	24.12	4.38	27.57	4.99	31.02	5.97
	31	15.51	3.22	17.23	3.50	20.68	4.11	22.40	4.42	24.12	4.74	27.57	5.39	31.02	6.51
	33	15.51	3.47	17.23	3.77	20.68	4.42	22.40	4.76	24.12	5.11	27.57	5.81	31.02	7.11
	35	15.51	3.73	17.23	4.07	20.68	4.77	22.40	5.15	24.12	5.53	27.57	6.29	31.02	7.73
	37	15.51	4.02	17.23	4.38	20.68	5.15	22.40	5.55	24.12	5.97	27.57	6.79	31.02	8.38
	39	15.51	4.32	17.23	4.71	20.68	5.55	22.40	5.99	24.12	6.43	27.57	7.44	29.86	8.60
	41	15.51	4.65	17.23	5.08	20.68	5.98	22.40	6.44	24.12	6.93	27.57	8.10	28.78	8.58
	43	15.51	4.99	17.23	5.46	20.68	6.43	22.40	6.94	24.12	7.50	26.97	8.59	27.69	8.58
	45	15.51	5.37	17.23	5.87	20.68	6.93	22.40	7.50	24.12	8.11	25.04	7.98	25.27	7.75
	48	15.51	5.98	17.23	6.55	19.21	7.03	19.28	6.82	19.47	6.66	19.52	6.22	19.74	6.12
	50	15.51	6.43	15.31	6.12	15.53	5.78	15.68	5.67	16.14	5.70	15.99	5.35	16.06	5.24
	52	11.59	5.03	11.54	4.84	11.60	4.63	12.34	4.79	11.89	4.55	13.03	4.75	11.88	4.40

Abbreviations:
CR: Combination ratio
TC: Total capacity (kW)
PI: Power input (compressor + outdoor fan motor) (kW)

Notes:
1.Shaded cells indicate rating condition.

Table continued on next page ...

Table 2-9.2: 10HP cooling capacity (continued)

Combination (%) (Capacity index)	Outdoor temperature (°C DB)	Indoor temperature(°C DB/WB)													
		DB:22,WB:15		DB:23.3,WB:16		DB:25.8,WB:18		DB:27,WB:19		DB:28.2,WB:20		DB:30.7,WB:22		DB:32,WB:24	
		TC	PI	TC	PI	TC	PI	TC	PI	TC	PI	TC	PI	TC	PI
		kW	kW	kW	kW	kW	kW	kW	kW	kW	kW	kW	kW	kW	kW
70%	-5	13.57	1.36	15.08	1.52	18.09	1.85	19.60	1.99	21.11	2.17	24.12	2.47	27.14	2.92
	-2	13.57	1.37	15.08	1.54	18.09	1.86	19.60	2.01	21.11	2.19	24.12	2.52	27.14	2.93
	0	13.57	1.37	15.08	1.54	18.09	1.88	19.60	2.02	21.11	2.20	24.12	2.61	27.14	2.94
	2	13.57	1.37	15.08	1.55	18.09	1.88	19.60	2.02	21.11	2.21	24.12	2.64	27.14	2.98
	4	13.57	1.39	15.08	1.56	18.09	1.89	19.60	2.06	21.11	2.25	24.12	2.65	27.14	3.00
	6	13.57	1.40	15.08	1.58	18.09	1.90	19.60	2.08	21.11	2.26	24.12	2.70	27.14	3.08
	8	13.57	1.41	15.08	1.59	18.09	1.90	19.60	2.09	21.11	2.28	24.12	2.71	27.14	3.12
	10	13.57	1.41	15.08	1.61	18.09	1.92	19.60	2.11	21.11	2.29	24.12	2.75	27.14	3.14
	12	13.57	1.42	15.08	1.61	18.09	1.93	19.60	2.12	21.11	2.36	24.12	2.82	27.14	3.25
	14	13.57	1.43	15.08	1.62	18.09	1.99	19.60	2.18	21.11	2.41	24.12	3.01	27.14	3.51
	16	13.57	1.43	15.08	1.62	18.09	2.08	19.60	2.33	21.11	2.66	24.12	3.14	27.14	3.52
	18	13.57	1.51	15.08	1.68	18.09	2.41	19.60	2.71	21.11	2.84	24.12	3.16	27.14	3.56
	20	13.57	1.62	15.08	2.00	18.09	2.56	19.60	2.72	21.11	2.87	24.12	3.20	27.14	3.57
	21	13.57	1.73	15.08	2.23	18.09	2.56	19.60	2.72	21.11	2.89	24.12	3.22	27.14	3.58
	23	13.57	1.77	15.08	2.26	18.09	2.62	19.60	2.80	21.11	2.97	24.12	3.30	27.14	3.80
	25	13.57	1.88	15.08	2.32	18.09	2.78	19.60	2.97	21.11	3.16	24.12	3.54	27.14	4.12
	27	13.57	2.06	15.08	2.52	18.09	3.00	19.60	3.21	21.11	3.43	24.12	3.84	27.14	4.45
	29	13.57	2.31	15.08	2.82	18.09	3.24	19.60	3.47	21.11	3.70	24.12	4.15	27.14	4.82
	31	13.57	2.52	15.08	3.03	18.09	3.50	19.60	3.75	21.11	4.00	24.12	4.49	27.14	5.22
	33	13.57	2.68	15.08	3.18	18.09	3.78	19.60	4.05	21.11	4.31	24.12	4.85	27.14	5.65
	35	13.57	3.03	15.08	3.52	18.09	4.07	19.60	4.36	21.11	4.65	24.12	5.25	27.14	6.10
	37	13.57	3.28	15.08	3.79	18.09	4.39	19.60	4.71	21.11	5.02	24.12	5.67	27.14	6.58
	39	13.57	3.55	15.08	4.07	18.09	4.72	19.60	5.07	21.11	5.41	24.12	6.11	27.14	7.11
	41	13.57	3.83	15.08	4.37	18.09	5.09	19.60	5.46	21.11	5.84	24.12	6.58	27.14	7.75
	43	13.57	4.13	15.08	4.70	18.09	5.48	19.60	5.88	21.11	6.29	24.12	7.09	27.14	8.44
	45	13.57	4.45	15.08	5.06	18.09	5.90	19.60	6.33	21.11	6.77	24.12	7.66	25.20	8.02
	48	13.57	5.19	15.08	5.63	18.09	6.57	19.60	7.07	19.46	6.79	19.67	6.42	19.80	6.23
	50	13.57	5.56	15.08	6.05	15.57	5.88	15.64	5.73	15.94	5.68	16.21	5.46	16.31	5.36
	52	11.59	5.05	11.64	4.90	11.92	4.75	11.92	4.64	12.26	4.67	12.53	4.60	11.90	4.38
60%	-5	11.63	1.14	12.92	1.30	15.51	1.57	16.80	1.74	18.09	1.85	20.68	2.15	23.26	2.42
	-2	11.63	1.15	12.92	1.31	15.51	1.59	16.80	1.75	18.09	1.85	20.68	2.16	23.26	2.43
	0	11.63	1.15	12.92	1.32	15.51	1.59	16.80	1.75	18.09	1.86	20.68	2.19	23.26	2.45
	2	11.63	1.15	12.92	1.34	15.51	1.60	16.80	1.75	18.09	1.87	20.68	2.19	23.26	2.45
	4	11.63	1.16	12.92	1.34	15.51	1.61	16.80	1.75	18.09	1.88	20.68	2.20	23.26	2.45
	6	11.63	1.18	12.92	1.34	15.51	1.62	16.80	1.76	18.09	1.88	20.68	2.21	23.26	2.47
	8	11.63	1.19	12.92	1.34	15.51	1.63	16.80	1.76	18.09	1.89	20.68	2.21	23.26	2.50
	10	11.63	1.24	12.92	1.36	15.51	1.64	16.80	1.77	18.09	1.93	20.68	2.21	23.26	2.52
	12	11.63	1.26	12.92	1.36	15.51	1.64	16.80	1.80	18.09	1.94	20.68	2.25	23.26	2.62
	14	11.63	1.26	12.92	1.36	15.51	1.66	16.80	1.84	18.09	2.03	20.68	2.44	23.26	2.78
	16	11.63	1.28	12.92	1.39	15.51	1.72	16.80	1.96	18.09	2.09	20.68	2.63	23.26	3.09
	18	11.63	1.29	12.92	1.40	15.51	1.87	16.80	2.10	18.09	2.42	20.68	2.75	23.26	3.09
	20	11.63	1.30	12.92	1.57	15.51	2.22	16.80	2.36	18.09	2.50	20.68	2.80	23.26	3.09
	21	11.63	1.34	12.92	1.61	15.51	2.24	16.80	2.37	18.09	2.51	20.68	2.80	23.26	3.12
	23	11.63	1.38	12.92	1.78	15.51	2.26	16.80	2.42	18.09	2.57	20.68	2.85	23.26	3.18
	25	11.63	1.40	12.92	1.80	15.51	2.36	16.80	2.50	18.09	2.66	20.68	2.94	23.26	3.35
	27	11.63	1.56	12.92	1.82	15.51	2.45	16.80	2.69	18.09	2.85	20.68	3.17	23.26	3.63
	29	11.63	1.74	12.92	1.97	15.51	2.76	16.80	2.91	18.09	3.09	20.68	3.43	23.26	3.92
	31	11.63	1.93	12.92	2.17	15.51	2.96	16.80	3.15	18.09	3.34	20.68	3.71	23.26	4.23
	33	11.63	2.12	12.92	2.48	15.51	3.19	16.80	3.40	18.09	3.60	20.68	4.01	23.26	4.58
	35	11.63	2.33	12.92	2.68	15.51	3.44	16.80	3.67	18.09	3.89	20.68	4.33	23.26	4.95
	37	11.63	2.55	12.92	2.92	15.51	3.71	16.80	3.96	18.09	4.20	20.68	4.66	23.26	5.34
	39	11.63	2.78	12.92	3.16	15.51	3.99	16.80	4.25	18.09	4.53	20.68	5.04	23.26	5.76
	41	11.63	3.03	12.92	3.42	15.51	4.30	16.80	4.58	18.09	4.86	20.68	5.42	23.26	6.22
	43	11.63	3.33	12.92	3.71	15.51	4.62	16.80	4.93	18.09	5.23	20.68	5.85	23.26	6.70
	45	11.63	3.61	12.92	4.00	15.51	4.97	16.80	5.30	18.09	5.64	20.68	6.30	23.26	7.24
	48	11.63	4.06	12.92	4.62	15.51	5.52	16.80	5.91	18.09	6.29	19.70	6.63	19.78	6.41
	50	11.63	4.76	12.92	5.15	15.51	5.94	15.76	5.88	15.86	5.74	15.92	5.44	16.05	5.33
	52	11.63	5.11	11.73	4.99	11.99	4.80	12.18	4.75	12.15	4.65	12.03	4.45	12.79	4.61

Abbreviations:
CR: Combination ratio
TC: Total capacity (kW)
PI: Power input (compressor + outdoor fan motor) (kW)

Notes:
Shaded cells indicate rating condition.

Table continued on next page ...

Table 2-9.2: 10HP cooling capacity (continued)

Combination (%) (Capacity index)	Outdoor temperature (°C DB)	Indoor temperature(°C DB/WB)													
		DB:22,WB:15		DB:23.3,WB:16		DB:25.8,WB:18		DB:27,WB:19		DB:28.2,WB:20		DB:30.7,WB:22		DB:32,WB:24	
		TC	PI	TC	PI	TC	PI	TC	PI	TC	PI	TC	PI	TC	PI
		kW	kW	kW	kW	kW	kW	kW	kW	kW	kW	kW	kW	kW	kW
50%	-5	9.69	0.91	10.77	1.05	12.92	1.30	14.00	1.42	15.08	1.56	17.23	1.74	19.38	1.96
	-2	9.69	0.93	10.77	1.05	12.92	1.31	14.00	1.42	15.08	1.56	17.23	1.75	19.38	2.00
	0	9.69	0.95	10.77	1.06	12.92	1.32	14.00	1.43	15.08	1.57	17.23	1.80	19.38	2.02
	2	9.69	0.96	10.77	1.08	12.92	1.33	14.00	1.43	15.08	1.60	17.23	1.81	19.38	2.02
	4	9.69	0.97	10.77	1.09	12.92	1.35	14.00	1.44	15.08	1.61	17.23	1.81	19.38	2.03
	6	9.69	0.97	10.77	1.09	12.92	1.37	14.00	1.47	15.08	1.61	17.23	1.82	19.38	2.03
	8	9.69	0.98	10.77	1.10	12.92	1.38	14.00	1.47	15.08	1.61	17.23	1.82	19.38	2.04
	10	9.69	0.99	10.77	1.11	12.92	1.39	14.00	1.48	15.08	1.64	17.23	1.87	19.38	2.06
	12	9.69	0.99	10.77	1.14	12.92	1.40	14.00	1.50	15.08	1.64	17.23	1.88	19.38	2.07
	14	9.69	1.01	10.77	1.17	12.92	1.41	14.00	1.50	15.08	1.65	17.23	1.89	19.38	2.16
	16	9.69	1.03	10.77	1.18	12.92	1.43	14.00	1.52	15.08	1.65	17.23	1.98	19.38	2.32
	18	9.69	1.03	10.77	1.18	12.92	1.45	14.00	1.64	15.08	1.80	17.23	2.29	19.38	2.60
	20	9.69	1.03	10.77	1.21	12.92	1.59	14.00	1.87	15.08	2.16	17.23	2.36	19.38	2.64
	21	9.69	1.04	10.77	1.21	12.92	1.65	14.00	1.89	15.08	2.17	17.23	2.41	19.38	2.66
	23	9.69	1.06	10.77	1.24	12.92	1.68	14.00	2.03	15.08	2.20	17.23	2.43	19.38	2.68
	25	9.69	1.07	10.77	1.27	12.92	1.86	14.00	2.06	15.08	2.24	17.23	2.49	19.38	2.76
	27	9.69	1.21	10.77	1.35	12.92	1.88	14.00	2.08	15.08	2.28	17.23	2.59	19.38	2.91
	29	9.69	1.36	10.77	1.52	12.92	1.92	14.00	2.12	15.08	2.48	17.23	2.80	19.38	3.16
	31	9.69	1.53	10.77	1.69	12.92	2.05	14.00	2.33	15.08	2.61	17.23	3.03	19.38	3.41
	33	9.69	1.69	10.77	1.87	12.92	2.25	14.00	2.55	15.08	2.90	17.23	3.28	19.38	3.69
	35	9.69	1.87	10.77	2.06	12.92	2.57	14.00	2.83	15.08	3.06	17.23	3.54	19.38	3.99
	37	9.69	2.05	10.77	2.26	12.92	2.77	14.00	3.07	15.08	3.39	17.23	3.82	19.38	4.30
	39	9.69	2.25	10.77	2.47	12.92	3.02	14.00	3.32	15.08	3.65	17.23	4.11	19.38	4.63
	41	9.69	2.46	10.77	2.70	12.92	3.27	14.00	3.59	15.08	4.02	17.23	4.42	19.38	5.00
	43	9.69	2.68	10.77	2.93	12.92	3.53	14.00	3.87	15.08	4.31	17.23	4.76	19.38	5.37
	45	9.69	2.91	10.77	3.19	12.92	3.82	14.00	4.17	15.08	4.63	17.23	5.12	19.38	5.78
	48	9.69	3.29	10.77	3.59	12.92	4.29	14.00	4.88	15.08	5.16	17.23	5.71	19.38	6.46
	50	9.69	4.02	10.77	4.31	12.92	4.92	14.00	5.22	15.08	5.53	16.02	5.63	16.15	5.50
	52	9.69	4.30	10.77	4.62	11.99	4.87	12.03	4.76	12.15	4.69	12.27	4.55	12.20	4.45

Abbreviations:
CR: Combination ratio
TC: Total capacity (kW)
PI: Power input (compressor + outdoor fan motor) (kW)

Notes:
Shaded cells indicate rating condition.

Table 2-9.3: 12HP cooling capacity

Combination (%) (Capacity index)	Outdoor temperature (°C DB)	Indoor temperature(°C DB/WB)													
		DB:22,WB:15		DB:23.3,WB:16		DB:25.8,WB:18		DB:27,WB:19		DB:28.2,WB:20		DB:30.7,WB:22		DB:32,WB:24	
		TC	PI	TC	PI	TC	PI	TC	PI	TC	PI	TC	PI	TC	PI
		kW	kW	kW	kW	kW	kW	kW	kW	kW	kW	kW	kW	kW	kW
130%	-5	30.15	3.01	33.50	3.63	40.20	4.69	43.55	5.23	46.90	5.76	53.60	6.98	60.30	8.02
	-2	30.15	3.04	33.50	3.66	40.20	4.71	43.55	5.27	46.90	5.77	53.60	7.11	60.30	8.18
	0	30.15	3.04	33.50	3.67	40.20	4.74	43.55	5.38	46.90	5.88	53.60	7.22	60.30	8.33
	2	30.15	3.16	33.50	3.70	40.20	4.75	43.55	5.42	46.90	5.95	53.60	7.22	60.30	8.42
	4	30.15	3.18	33.50	3.74	40.20	4.88	43.55	5.53	46.90	6.10	53.60	7.30	60.30	8.43
	6	30.15	3.20	33.50	3.77	40.20	4.98	43.55	5.61	46.90	6.24	53.60	7.39	60.30	8.57
	8	30.15	3.20	33.50	3.79	40.20	5.18	43.55	5.71	46.90	6.26	53.60	7.42	60.30	9.06
	10	30.15	3.25	33.50	3.99	40.20	5.26	43.55	5.85	46.90	6.37	53.60	7.54	60.30	9.72
	12	30.15	3.35	33.50	4.13	40.20	5.29	43.55	5.91	46.90	6.45	53.60	7.83	57.68	9.52
	14	30.15	3.71	33.50	4.18	40.20	5.40	43.55	5.94	46.90	6.71	53.60	8.42	56.27	9.52
	16	30.15	3.83	33.50	4.31	40.20	5.61	43.55	6.38	46.90	7.22	53.60	9.10	54.87	9.51
	18	30.15	4.02	33.50	4.54	40.20	6.05	43.55	6.88	46.90	7.77	52.30	9.50	53.55	9.52
	20	30.15	4.32	33.50	4.94	40.20	6.53	43.55	7.41	46.90	8.33	50.97	9.52	52.15	9.52
	21	30.15	4.48	33.50	5.14	40.20	6.79	43.55	7.68	46.90	8.63	50.29	9.53	51.47	9.53
	23	30.15	4.81	33.50	5.58	40.20	7.32	43.55	8.26	46.90	9.27	48.93	9.51	50.21	9.57
	25	30.15	5.23	33.50	6.05	40.20	7.89	43.55	8.90	45.42	9.51	47.51	9.52	48.68	9.54
	27	30.15	5.69	33.50	6.54	40.20	8.48	43.55	9.58	43.93	9.52	45.90	9.49	47.14	9.54
	29	30.15	6.16	33.50	7.10	40.20	9.15	41.44	9.49	42.47	9.52	44.57	9.55	45.61	9.56
	31	30.15	6.69	33.50	7.67	39.08	9.50	40.03	9.50	40.94	9.51	43.09	9.58	44.05	9.58
	33	30.15	7.24	33.50	8.27	37.61	9.50	38.53	9.51	39.44	9.52	41.40	9.51	42.52	9.59
	35	30.15	7.82	33.50	8.94	36.14	9.51	37.06	9.52	38.04	9.54	39.85	9.53	40.99	9.61
	37	30.15	8.45	33.50	9.64	34.73	9.54	35.74	9.58	36.57	9.55	38.35	9.54	39.50	9.60
	39	30.15	9.14	31.52	9.51	33.24	9.50	34.13	9.50	34.97	9.49	36.85	9.55	38.29	9.78
	41	29.21	9.50	30.10	9.50	31.91	9.54	32.69	9.51	33.63	9.58	34.13	8.85	34.25	8.41
	43	27.87	9.50	28.78	9.55	29.27	8.87	29.37	8.50	29.69	8.21	29.93	7.52	30.08	7.28
	45	24.87	8.56	25.13	8.24	25.45	7.60	25.91	7.51	26.00	7.25	26.04	6.75	25.95	6.52
	48	18.94	6.73	19.37	6.61	19.62	6.26	19.89	6.16	19.62	5.92	19.45	5.58	20.13	5.62
	50	15.38	5.83	15.58	5.74	15.03	5.26	15.57	5.29	16.10	5.32	15.52	4.99	16.02	5.03
	52	11.66	4.96	10.86	4.59	11.70	4.65	12.10	4.69	10.84	4.33	11.43	4.41	11.71	4.45
120%	-5	27.83	2.82	30.92	3.25	37.11	4.29	40.20	4.75	43.29	5.32	49.48	6.39	55.66	7.38
	-2	27.83	2.83	30.92	3.26	37.11	4.39	40.20	4.82	43.29	5.41	49.48	6.58	55.66	7.44
	0	27.83	2.83	30.92	3.27	37.11	4.39	40.20	4.84	43.29	5.44	49.48	6.62	55.66	7.60
	2	27.83	2.84	30.92	3.35	37.11	4.39	40.20	4.95	43.29	5.46	49.48	6.67	55.66	7.65
	4	27.83	2.84	30.92	3.36	37.11	4.46	40.20	5.11	43.29	5.57	49.48	6.73	55.66	7.75
	6	27.83	2.89	30.92	3.38	37.11	4.65	40.20	5.21	43.29	5.75	49.48	6.73	55.66	7.92
	8	27.83	2.95	30.92	3.49	37.11	4.81	40.20	5.23	43.29	5.79	49.48	6.78	55.66	7.92
	10	27.83	3.04	30.92	3.53	37.11	4.84	40.20	5.38	43.29	5.90	49.48	6.93	55.66	8.18
	12	27.83	3.07	30.92	3.78	37.11	4.84	40.20	5.47	43.29	5.90	49.48	6.98	55.66	8.80
	14	27.83	3.41	30.92	3.92	37.11	4.97	40.20	5.50	43.29	6.01	49.48	7.22	55.66	9.53
	16	27.83	3.59	30.92	4.05	37.11	5.07	40.20	5.52	43.29	6.25	49.48	7.77	53.89	9.67
	18	27.83	3.69	30.92	4.07	37.11	5.24	40.20	5.98	43.29	6.75	49.48	8.36	52.54	9.66
	20	27.83	3.96	30.92	4.37	37.11	5.69	40.20	6.46	43.29	7.27	49.48	8.98	51.18	9.68
	21	27.83	4.09	30.92	4.54	37.11	5.93	40.20	6.73	43.29	7.54	49.48	9.35	50.49	9.65
	23	27.83	4.41	30.92	4.89	37.11	6.41	40.20	7.27	43.29	8.13	48.08	9.66	49.11	9.65
	25	27.83	4.74	30.92	5.33	37.11	6.93	40.20	7.83	43.29	8.77	46.70	9.65	47.80	9.66
	27	27.83	5.11	30.92	5.79	37.11	7.51	40.20	8.45	43.29	9.41	45.30	9.66	46.37	9.67
	29	27.83	5.49	30.92	6.31	37.11	8.12	40.20	9.10	41.85	9.66	43.78	9.66	44.88	9.68
	31	27.83	5.95	30.92	6.83	37.11	8.75	40.20	9.82	40.41	9.67	42.30	9.67	43.40	9.70
	33	27.83	6.47	30.92	7.38	37.11	9.44	38.07	9.67	38.94	9.67	40.97	9.73	41.88	9.73
	35	27.83	6.99	30.92	8.01	35.78	9.69	36.58	9.65	37.49	9.67	39.34	9.66	40.40	9.75
	37	27.83	7.59	30.92	8.65	34.35	9.69	35.20	9.68	36.12	9.69	37.87	9.68	38.92	9.76
	39	27.83	8.19	30.92	9.36	32.96	9.66	33.74	9.68	34.70	9.71	36.38	9.70	37.45	9.77
	41	27.83	8.89	29.88	9.68	31.46	9.65	32.35	9.66	32.98	9.56	33.40	8.84	33.86	8.56
	43	27.83	9.59	28.55	9.70	29.03	9.02	29.13	8.65	29.42	8.37	29.84	7.63	30.00	7.39
	45	24.64	8.64	24.86	8.30	25.37	7.74	25.87	7.63	25.93	7.40	26.05	6.89	26.51	6.79
	48	19.07	6.87	19.11	6.61	19.38	6.26	19.17	6.02	19.38	5.91	20.76	5.99	19.89	5.61
	50	15.25	5.83	15.08	5.59	14.92	5.25	15.45	5.28	15.97	5.31	15.42	4.98	15.90	5.02
	52	11.63	4.96	10.86	4.59	11.69	4.65	12.08	4.68	10.86	4.32	11.45	4.40	11.72	4.44

Abbreviations:
CR: Combination ratio
TC: Total capacity (kW)
PI: Power input (compressor + outdoor fan motor) (kW)

Notes:
1.Shaded cells indicate rating condition.

Table continued on next page ...

Table 2-9.3: 12HP cooling capacity (continued)

Combination (%) (Capacity index)	Outdoor temperature (°C DB)	Indoor temperature(°C DB/WB)													
		DB:22,WB:15		DB:23.3,WB:16		DB:25.8,WB:18		DB:27,WB:19		DB:28.2,WB:20		DB:30.7,WB:22		DB:32,WB:24	
		TC	PI	TC	PI	TC	PI	TC	PI	TC	PI	TC	PI	TC	PI
		kW	kW	kW	kW	kW	kW	kW	kW	kW	kW	kW	kW	kW	kW
110%	-5	25.51	2.55	28.35	3.03	34.02	3.96	36.85	4.42	39.68	4.82	45.35	5.85	51.02	6.80
	-2	25.51	2.59	28.35	3.03	34.02	3.98	36.85	4.43	39.68	4.92	45.35	5.99	51.02	6.85
	0	25.51	2.60	28.35	3.04	34.02	3.99	36.85	4.48	39.68	4.96	45.35	6.06	51.02	6.92
	2	25.51	2.61	28.35	3.05	34.02	4.07	36.85	4.51	39.68	5.00	45.35	6.10	51.02	6.95
	4	25.51	2.65	28.35	3.09	34.02	4.14	36.85	4.59	39.68	5.07	45.35	6.11	51.02	7.06
	6	25.51	2.65	28.35	3.11	34.02	4.17	36.85	4.67	39.68	5.20	45.35	6.15	51.02	7.13
	8	25.51	2.68	28.35	3.15	34.02	4.25	36.85	4.74	39.68	5.29	45.35	6.21	51.02	7.23
	10	25.51	2.74	28.35	3.21	34.02	4.31	36.85	4.84	39.68	5.31	45.35	6.29	51.02	7.34
	12	25.51	2.78	28.35	3.32	34.02	4.45	36.85	4.90	39.68	5.35	45.35	6.35	51.02	7.36
	14	25.51	2.98	28.35	3.65	34.02	4.49	36.85	4.97	39.68	5.49	45.35	6.46	51.02	7.90
	16	25.51	3.35	28.35	3.72	34.02	4.54	36.85	5.06	39.68	5.56	45.35	6.61	51.02	8.49
	18	25.51	3.42	28.35	3.78	34.02	4.62	36.85	5.08	39.68	5.76	45.35	7.12	51.02	9.16
	20	25.51	3.60	28.35	3.96	34.02	4.86	36.85	5.52	39.68	6.22	45.35	7.68	51.02	9.95
	21	25.51	3.73	28.35	4.11	34.02	5.06	36.85	5.77	39.68	6.46	45.35	7.97	49.50	9.82
	23	25.51	4.01	28.35	4.41	34.02	5.52	36.85	6.26	39.68	7.00	45.35	8.57	48.17	9.81
	25	25.51	4.31	28.35	4.75	34.02	6.02	36.85	6.78	39.68	7.59	45.35	9.26	46.90	9.84
	27	25.51	4.63	28.35	5.12	34.02	6.51	36.85	7.33	39.68	8.16	45.35	9.99	45.52	9.83
	29	25.51	5.00	28.35	5.53	34.02	7.09	36.85	7.94	39.68	8.82	43.11	9.83	44.07	9.84
	31	25.51	5.38	28.35	6.00	34.02	7.67	36.85	8.58	39.68	9.55	41.62	9.81	42.66	9.82
	33	25.51	5.78	28.35	6.53	34.02	8.29	36.85	9.25	38.40	9.84	40.22	9.85	41.23	9.85
	35	25.51	6.24	28.35	7.05	34.02	8.97	36.85	10.02	36.94	9.80	38.72	9.83	39.80	9.87
	37	25.51	6.75	28.35	7.67	34.02	9.71	34.75	9.83	35.54	9.81	37.32	9.81	38.33	9.90
	39	25.51	7.32	28.35	8.30	32.53	9.82	33.36	9.84	34.15	9.82	35.90	9.83	36.90	9.91
	41	25.51	7.93	28.35	8.99	31.18	9.82	31.96	9.84	32.58	9.70	32.98	8.99	33.43	8.70
	43	25.51	8.58	28.35	9.69	28.61	9.07	28.73	8.72	29.13	8.52	29.49	7.79	29.75	7.54
	45	24.41	8.74	24.59	8.40	24.91	7.73	25.01	7.48	25.52	7.36	26.03	7.01	25.52	6.65
	48	18.82	6.86	18.84	6.61	19.51	6.39	19.34	6.15	19.57	6.05	20.47	5.98	19.63	5.60
	50	14.73	5.69	14.96	5.58	15.70	5.51	15.32	5.28	15.83	5.31	15.30	4.97	15.78	5.01
	52	11.23	4.81	10.85	4.59	11.67	4.64	12.05	4.68	10.87	4.32	11.45	4.39	11.72	4.44
100%	-5	23.19	2.32	25.77	2.66	30.92	3.53	33.50	3.96	36.08	4.48	41.23	5.32	46.38	6.14
	-2	23.19	2.35	25.77	2.72	30.92	3.58	33.50	4.02	36.08	4.52	41.23	5.38	46.38	6.25
	0	23.19	2.37	25.77	2.74	30.92	3.64	33.50	4.06	36.08	4.53	41.23	5.45	46.38	6.28
	2	23.19	2.37	25.77	2.82	30.92	3.64	33.50	4.11	36.08	4.56	41.23	5.46	46.38	6.29
	4	23.19	2.38	25.77	2.83	30.92	3.67	33.50	4.17	36.08	4.62	41.23	5.51	46.38	6.40
	6	23.19	2.40	25.77	2.86	30.92	3.75	33.50	4.19	36.08	4.76	41.23	5.62	46.38	6.49
	8	23.19	2.48	25.77	2.86	30.92	3.86	33.50	4.25	36.08	4.78	41.23	5.63	46.38	6.54
	10	23.19	2.48	25.77	2.87	30.92	3.97	33.50	4.29	36.08	4.80	41.23	5.68	46.38	6.55
	12	23.19	2.50	25.77	2.99	30.92	3.97	33.50	4.34	36.08	4.85	41.23	5.73	46.38	6.68
	14	23.19	2.65	25.77	3.31	30.92	4.11	33.50	4.44	36.08	4.94	41.23	5.80	46.38	6.72
	16	23.19	3.04	25.77	3.37	30.92	4.14	33.50	4.58	36.08	5.04	41.23	5.91	46.38	7.06
	18	23.19	3.16	25.77	3.44	30.92	4.23	33.50	4.59	36.08	5.06	41.23	5.94	46.38	7.61
	20	23.19	3.24	25.77	3.56	30.92	4.32	33.50	4.69	36.08	5.20	41.23	6.42	46.38	8.17
	21	23.19	3.36	25.77	3.70	30.92	4.38	33.50	4.83	36.08	5.43	41.23	6.70	46.38	8.50
	23	23.19	3.61	25.77	3.96	30.92	4.73	33.50	5.28	36.08	5.92	41.23	7.25	46.38	9.14
	25	23.19	3.89	25.77	4.26	30.92	5.10	33.50	5.74	36.08	6.40	41.23	7.81	46.38	9.88
	27	23.19	4.19	25.77	4.60	30.92	5.55	33.50	6.26	36.08	6.98	41.23	8.44	44.66	10.00
	29	23.19	4.50	25.77	4.96	30.92	6.07	33.50	6.81	36.08	7.57	41.23	9.17	43.27	9.97
	31	23.19	4.84	25.77	5.33	30.92	6.61	33.50	7.37	36.08	8.19	41.23	9.91	41.88	9.99
	33	23.19	5.21	25.77	5.75	30.92	7.17	33.50	7.97	36.08	8.86	39.54	10.00	40.42	9.97
	35	23.19	5.61	25.77	6.21	30.92	7.78	33.50	8.64	36.08	9.57	38.12	10.00	39.09	9.99
	37	23.19	6.04	25.77	6.70	30.92	8.43	33.50	9.35	35.08	9.97	36.71	9.97	37.71	10.02
	39	23.19	6.50	25.77	7.28	30.92	9.10	33.50	10.11	33.65	9.97	35.34	10.02	36.19	9.96
	41	23.19	6.99	25.77	7.86	30.92	9.86	31.52	9.98	32.22	9.92	32.54	9.12	32.90	8.86
	43	23.19	7.57	25.77	8.55	28.27	9.25	28.44	8.90	28.67	8.58	29.12	7.94	29.54	7.65
	45	23.19	8.20	24.38	8.51	24.73	7.87	24.89	7.60	24.96	7.36	25.07	6.86	25.50	6.76
	48	18.58	6.89	18.75	6.68	19.60	6.52	19.05	6.14	19.70	6.18	19.68	5.84	19.36	5.59
	50	14.94	5.83	15.16	5.73	15.09	5.38	15.17	5.27	15.68	5.30	15.18	4.97	15.64	5.01
	52	11.17	4.82	10.84	4.58	11.64	4.64	12.01	4.67	10.87	4.31	11.45	4.39	11.72	4.43

Abbreviations:
CR: Combination ratio
TC: Total capacity (kW)
PI: Power input (compressor + outdoor fan motor) (kW)

Notes:
1.Shaded cells indicate rating condition.

Table continued on next page ...

Table 2-9 3: 12HP cooling capacity (continued)

Combination (%) (Capacity index)	Outdoor temperature (°C DB)	Indoor temperature(°C DB/WB)													
		DB:22,WB:15		DB:23.3,WB:16		DB:25.8,WB:18		DB:27,WB:19		DB:28.2,WB:20		DB:30.7,WB:22		DB:32,WB:24	
		TC	PI	TC	PI	TC	PI	TC	PI	TC	PI	TC	PI	TC	PI
		kW	kW	kW	kW	kW	kW	kW	kW	kW	kW	kW	kW	kW	kW
90%	-5	20.87	2.08	23.19	2.33	27.83	3.09	30.15	3.53	32.47	3.83	37.11	4.55	41.75	5.40
	-2	20.87	2.09	23.19	2.36	27.83	3.13	30.15	3.54	32.47	3.94	37.11	4.63	41.75	5.42
	0	20.87	2.14	23.19	2.37	27.83	3.16	30.15	3.55	32.47	3.96	37.11	4.74	41.75	5.48
	2	20.87	2.14	23.19	2.40	27.83	3.20	30.15	3.61	32.47	3.98	37.11	4.76	41.75	5.50
	4	20.87	2.18	23.19	2.40	27.83	3.27	30.15	3.61	32.47	4.03	37.11	4.83	41.75	5.54
	6	20.87	2.19	23.19	2.40	27.83	3.29	30.15	3.74	32.47	4.06	37.11	4.85	41.75	5.63
	8	20.87	2.19	23.19	2.47	27.83	3.31	30.15	3.81	32.47	4.14	37.11	4.90	41.75	5.66
	10	20.87	2.23	23.19	2.48	27.83	3.48	30.15	3.85	32.47	4.18	37.11	4.95	41.75	5.71
	12	20.87	2.26	23.19	2.59	27.83	3.55	30.15	3.86	32.47	4.21	37.11	5.06	41.75	5.76
	14	20.87	2.37	23.19	2.81	27.83	3.57	30.15	3.89	32.47	4.27	37.11	5.06	41.75	5.87
	16	20.87	2.56	23.19	3.08	27.83	3.62	30.15	3.92	32.47	4.37	37.11	5.09	41.75	5.90
	18	20.87	2.84	23.19	3.08	27.83	3.65	30.15	4.03	32.47	4.38	37.11	5.13	41.75	5.97
	20	20.87	2.93	23.19	3.18	27.83	3.70	30.15	4.07	32.47	4.50	37.11	5.18	41.75	6.40
	21	20.87	2.97	23.19	3.22	27.83	3.77	30.15	4.09	32.47	4.51	37.11	5.26	41.75	6.65
	23	20.87	3.17	23.19	3.46	27.83	4.07	30.15	4.38	32.47	4.71	37.11	5.68	41.75	7.23
	25	20.87	3.42	23.19	3.73	27.83	4.39	30.15	4.74	32.47	5.10	37.11	6.18	41.75	7.80
	27	20.87	3.66	23.19	4.01	27.83	4.72	30.15	5.10	32.47	5.56	37.11	6.75	41.75	8.43
	29	20.87	3.96	23.19	4.33	27.83	5.09	30.15	5.52	32.47	6.06	37.11	7.33	41.75	9.14
	31	20.87	4.26	23.19	4.66	27.83	5.50	30.15	5.97	32.47	6.64	37.11	7.98	41.75	9.85
	33	20.87	4.58	23.19	5.02	27.83	5.94	30.15	6.52	32.47	7.21	37.11	8.66	40.07	9.99
	35	20.87	4.93	23.19	5.39	27.83	6.39	30.15	7.12	32.47	7.82	37.11	9.37	38.64	9.98
	37	20.87	5.29	23.19	5.82	27.83	6.96	30.15	7.72	32.47	8.51	37.11	10.17	37.31	9.96
	39	20.87	5.71	23.19	6.24	27.83	7.58	30.15	8.39	32.47	9.22	35.03	9.99	35.84	9.96
	41	20.87	6.14	23.19	6.72	27.83	8.22	30.15	9.08	32.47	9.99	32.67	9.37	32.90	8.98
	43	20.87	6.59	23.19	7.25	27.83	8.93	28.59	9.09	28.75	8.75	29.04	8.00	29.24	7.64
	45	20.87	7.07	23.19	7.81	24.78	8.00	25.09	7.73	25.20	7.48	25.33	6.99	25.78	6.89
	48	18.82	6.97	18.91	6.74	19.20	6.37	19.48	6.26	19.28	6.03	20.14	5.96	19.38	5.58
	50	15.00	5.83	15.24	5.71	15.57	5.50	15.71	5.39	15.29	5.16	15.28	4.96	15.75	4.99
	52	10.93	4.68	11.37	4.71	11.78	4.63	12.16	4.66	12.53	4.69	11.62	4.38	11.90	4.42
80%	-5	18.55	1.86	20.62	2.04	24.74	2.62	26.80	2.94	28.86	3.39	32.98	4.02	37.11	4.55
	-2	18.55	1.87	20.62	2.04	24.74	2.63	26.80	2.97	28.86	3.39	32.98	4.04	37.11	4.65
	0	18.55	1.88	20.62	2.05	24.74	2.67	26.80	2.97	28.86	3.43	32.98	4.06	37.11	4.71
	2	18.55	1.89	20.62	2.08	24.74	2.71	26.80	3.06	28.86	3.46	32.98	4.06	37.11	4.72
	4	18.55	1.90	20.62	2.10	24.74	2.75	26.80	3.13	28.86	3.51	32.98	4.13	37.11	4.74
	6	18.55	1.90	20.62	2.11	24.74	2.79	26.80	3.16	28.86	3.52	32.98	4.13	37.11	4.76
	8	18.55	1.92	20.62	2.14	24.74	2.83	26.80	3.31	28.86	3.55	32.98	4.15	37.11	4.79
	10	18.55	1.92	20.62	2.16	24.74	2.85	26.80	3.38	28.86	3.60	32.98	4.23	37.11	4.86
	12	18.55	1.96	20.62	2.23	24.74	3.00	26.80	3.39	28.86	3.66	32.98	4.33	37.11	4.86
	14	18.55	2.03	20.62	2.27	24.74	3.18	26.80	3.43	28.86	3.68	32.98	4.34	37.11	4.99
	16	18.55	2.19	20.62	2.53	24.74	3.21	26.80	3.47	28.86	3.72	32.98	4.40	37.11	5.03
	18	18.55	2.56	20.62	2.77	24.74	3.24	26.80	3.51	28.86	3.80	32.98	4.46	37.11	5.04
	20	18.55	2.60	20.62	2.83	24.74	3.25	26.80	3.61	28.86	3.90	32.98	4.49	37.11	5.09
	21	18.55	2.64	20.62	2.86	24.74	3.30	26.80	3.65	28.86	3.95	32.98	4.56	37.11	5.21
	23	18.55	2.76	20.62	3.00	24.74	3.47	26.80	3.73	28.86	3.97	32.98	4.57	37.11	5.47
	25	18.55	2.97	20.62	3.22	24.74	3.75	26.80	4.03	28.86	4.30	32.98	4.84	37.11	5.99
	27	18.55	3.20	20.62	3.47	24.74	4.03	26.80	4.33	28.86	4.64	32.98	5.24	37.11	6.51
	29	18.55	3.44	20.62	3.74	24.74	4.36	26.80	4.67	28.86	5.01	32.98	5.68	37.11	7.10
	31	18.55	3.70	20.62	4.04	24.74	4.69	26.80	5.06	28.86	5.40	32.98	6.24	37.11	7.75
	33	18.55	3.98	20.62	4.34	24.74	5.07	26.80	5.45	28.86	5.85	32.98	6.83	37.11	8.42
	35	18.55	4.29	20.62	4.67	24.74	5.45	26.80	5.88	28.86	6.29	32.98	7.44	37.11	9.13
	37	18.55	4.60	20.62	5.02	24.74	5.89	26.80	6.35	28.86	6.83	32.98	8.10	37.11	9.88
	39	18.55	4.95	20.62	5.41	24.74	6.35	26.80	6.84	28.86	7.45	32.98	8.81	35.45	9.97
	41	18.55	5.33	20.62	5.82	24.74	6.82	26.80	7.41	28.86	8.08	32.98	9.53	32.99	9.24
	43	18.55	5.72	20.62	6.26	24.74	7.34	26.80	8.02	28.86	8.81	29.20	8.27	29.32	7.86
	45	18.55	6.16	20.62	6.71	24.74	7.94	25.11	7.85	25.21	7.59	25.49	7.12	25.54	6.86
	48	18.55	6.84	19.10	6.83	19.32	6.43	19.40	6.25	19.64	6.15	19.64	5.80	19.86	5.69
	50	15.12	5.87	15.26	5.71	16.03	5.62	16.12	5.52	15.78	5.28	16.33	5.22	15.82	4.98
	52	11.42	4.81	11.87	4.84	11.46	4.50	12.28	4.65	12.65	4.68	11.78	4.37	12.06	4.41

Abbreviations:
CR: Combination ratio
TC: Total capacity (kW)
PI: Power input (compressor + outdoor fan motor) (kW)

Notes:
1.Shaded cells indicate rating condition.

Table continued on next page ...

Table 2-9.3: 12HP cooling capacity (continued)

Combination (%) (Capacity index)	Outdoor temperature (°C DB)	Indoor temperature(°C DB/WB)													
		DB:22,WB:15		DB:23.3,WB:16		DB:25.8,WB:18		DB:27,WB:19		DB:28.2,WB:20		DB:30.7,WB:22		DB:32,WB:24	
		TC	PI	TC	PI	TC	PI	TC	PI	TC	PI	TC	PI	TC	PI
		kW	kW	kW	kW	kW	kW	kW	kW	kW	kW	kW	kW	kW	kW
70%	-5	16.23	1.58	18.04	1.80	21.65	2.25	23.45	2.49	25.25	2.74	28.86	3.32	32.47	3.94
	-2	16.23	1.58	18.04	1.80	21.65	2.25	23.45	2.54	25.25	2.90	28.86	3.40	32.47	3.95
	0	16.23	1.60	18.04	1.83	21.65	2.27	23.45	2.65	25.25	2.94	28.86	3.43	32.47	3.98
	2	16.23	1.60	18.04	1.84	21.65	2.28	23.45	2.66	25.25	2.94	28.86	3.45	32.47	3.98
	4	16.23	1.63	18.04	1.85	21.65	2.30	23.45	2.66	25.25	2.94	28.86	3.53	32.47	3.98
	6	16.23	1.68	18.04	1.85	21.65	2.44	23.45	2.71	25.25	3.00	28.86	3.58	32.47	4.02
	8	16.23	1.72	18.04	1.88	21.65	2.45	23.45	2.71	25.25	3.13	28.86	3.58	32.47	4.08
	10	16.23	1.72	18.04	1.89	21.65	2.49	23.45	2.75	25.25	3.18	28.86	3.62	32.47	4.09
	12	16.23	1.72	18.04	1.93	21.65	2.49	23.45	2.89	25.25	3.22	28.86	3.65	32.47	4.11
	14	16.23	1.72	18.04	1.93	21.65	2.72	23.45	2.98	25.25	3.25	28.86	3.67	32.47	4.23
	16	16.23	1.81	18.04	2.25	21.65	2.82	23.45	3.00	25.25	3.27	28.86	3.72	32.47	4.25
	18	16.23	2.06	18.04	2.46	21.65	2.83	23.45	3.05	25.25	3.27	28.86	3.81	32.47	4.27
	20	16.23	2.31	18.04	2.49	21.65	2.88	23.45	3.09	25.25	3.28	28.86	3.85	32.47	4.39
	21	16.23	2.31	18.04	2.52	21.65	2.90	23.45	3.17	25.25	3.36	28.86	3.93	32.47	4.48
	23	16.23	2.40	18.04	2.60	21.65	2.99	23.45	3.19	25.25	3.37	28.86	4.00	32.47	4.54
	25	16.23	2.56	18.04	2.77	21.65	3.17	23.45	3.39	25.25	3.59	28.86	4.01	32.47	4.64
	27	16.23	2.76	18.04	2.99	21.65	3.43	23.45	3.66	25.25	3.88	28.86	4.33	32.47	5.02
	29	16.23	2.98	18.04	3.22	21.65	3.70	23.45	3.95	25.25	4.20	28.86	4.70	32.47	5.41
	31	16.23	3.20	18.04	3.46	21.65	3.99	23.45	4.26	25.25	4.54	28.86	5.08	32.47	5.87
	33	16.23	3.45	18.04	3.73	21.65	4.30	23.45	4.59	25.25	4.90	28.86	5.47	32.47	6.36
	35	16.23	3.71	18.04	4.01	21.65	4.62	23.45	4.95	25.25	5.28	28.86	5.91	32.47	6.99
	37	16.23	3.98	18.04	4.32	21.65	4.99	23.45	5.34	25.25	5.67	28.86	6.37	32.47	7.63
	39	16.23	4.28	18.04	4.64	21.65	5.37	23.45	5.75	25.25	6.12	28.86	6.90	32.47	8.32
	41	16.23	4.60	18.04	4.98	21.65	5.77	23.45	6.20	25.25	6.59	28.86	7.44	32.47	9.06
	43	16.23	4.93	18.04	5.35	21.65	6.22	23.45	6.67	25.25	7.12	28.86	8.11	29.46	8.20
	45	16.23	5.30	18.04	5.74	21.65	6.69	23.45	7.16	25.25	7.66	25.62	7.30	25.77	7.05
	48	16.23	5.90	18.04	6.39	19.46	6.55	19.61	6.38	19.69	6.20	19.96	5.92	20.58	5.96
	50	15.34	5.95	15.40	5.77	15.61	5.47	15.72	5.37	16.20	5.40	15.86	5.07	15.85	4.97
	52	11.52	4.80	11.58	4.70	11.99	4.62	11.92	4.52	12.27	4.55	11.91	4.36	12.20	4.40
60%	-5	13.92	1.36	15.46	1.53	18.55	1.83	20.10	2.02	21.65	2.15	24.74	2.78	27.83	3.26
	-2	13.92	1.38	15.46	1.54	18.55	1.83	20.10	2.11	21.65	2.30	24.74	2.80	27.83	3.30
	0	13.92	1.39	15.46	1.55	18.55	1.84	20.10	2.11	21.65	2.35	24.74	2.85	27.83	3.36
	2	13.92	1.41	15.46	1.55	18.55	1.84	20.10	2.11	21.65	2.37	24.74	2.88	27.83	3.36
	4	13.92	1.43	15.46	1.58	18.55	1.87	20.10	2.13	21.65	2.37	24.74	2.97	27.83	3.38
	6	13.92	1.44	15.46	1.59	18.55	1.89	20.10	2.14	21.65	2.38	24.74	2.98	27.83	3.39
	8	13.92	1.44	15.46	1.60	18.55	1.90	20.10	2.16	21.65	2.45	24.74	3.05	27.83	3.45
	10	13.92	1.45	15.46	1.62	18.55	1.92	20.10	2.18	21.65	2.46	24.74	3.06	27.83	3.46
	12	13.92	1.46	15.46	1.62	18.55	2.04	20.10	2.35	21.65	2.66	24.74	3.10	27.83	3.47
	14	13.92	1.47	15.46	1.63	18.55	2.10	20.10	2.42	21.65	2.72	24.74	3.13	27.83	3.49
	16	13.92	1.50	15.46	1.73	18.55	2.43	20.10	2.57	21.65	2.80	24.74	3.14	27.83	3.52
	18	13.92	1.52	15.46	2.06	18.55	2.46	20.10	2.59	21.65	2.82	24.74	3.21	27.83	3.56
	20	13.92	1.88	15.46	2.15	18.55	2.48	20.10	2.68	21.65	2.82	24.74	3.22	27.83	3.60
	21	13.92	1.99	15.46	2.19	18.55	2.52	20.10	2.68	21.65	2.90	24.74	3.30	27.83	3.74
	23	13.92	2.00	15.46	2.24	18.55	2.59	20.10	2.74	21.65	2.94	24.74	3.32	27.83	3.75
	25	13.92	2.01	15.46	2.35	18.55	2.68	20.10	2.85	21.65	3.02	24.74	3.36	27.83	3.90
	27	13.92	2.08	15.46	2.54	18.55	2.88	20.10	3.05	21.65	3.22	24.74	3.56	27.83	4.06
	29	13.92	2.33	15.46	2.73	18.55	3.11	20.10	3.30	21.65	3.49	24.74	3.85	27.83	4.38
	31	13.92	2.45	15.46	2.95	18.55	3.35	20.10	3.57	21.65	3.76	24.74	4.17	27.83	4.73
	33	13.92	2.66	15.46	3.18	18.55	3.61	20.10	3.84	21.65	4.06	24.74	4.50	27.83	5.13
	35	13.92	2.88	15.46	3.42	18.55	3.89	20.10	4.14	21.65	4.38	24.74	4.84	27.83	5.53
	37	13.92	3.25	15.46	3.67	18.55	4.19	20.10	4.45	21.65	4.71	24.74	5.24	27.83	5.96
	39	13.92	3.58	15.46	3.94	18.55	4.50	20.10	4.79	21.65	5.09	24.74	5.64	27.83	6.42
	41	13.92	3.85	15.46	4.23	18.55	4.85	20.10	5.16	21.65	5.48	24.74	6.07	27.83	6.94
	43	13.92	4.13	15.46	4.54	18.55	5.20	20.10	5.54	21.65	5.89	24.74	6.55	27.83	7.47
	45	13.92	4.44	15.46	4.88	18.55	5.60	20.10	5.97	21.65	6.32	24.74	7.05	25.86	7.28
	48	13.92	4.94	15.46	5.42	18.55	6.22	20.10	6.64	19.82	6.34	19.90	5.97	20.37	5.93
	50	13.92	5.37	15.46	5.81	15.74	5.57	15.81	5.43	16.13	5.38	16.25	5.18	16.75	5.21
	52	11.60	4.82	11.62	4.68	12.04	4.60	12.40	4.63	11.87	4.40	12.01	4.34	12.30	4.38

Abbreviations:
CR: Combination ratio
TC: Total capacity (kW)
PI: Power input (compressor + outdoor fan motor) (kW)

Notes:
Shaded cells indicate rating condition.

Table continued on next page ...

Table 2-9 3: 12HP cooling capacity (continued)

Combination (%) (Capacity index)	Outdoor temperature (°C DB)	Indoor temperature(°C DB/WB)													
		DB:22,WB:15		DB:23.3,WB:16		DB:25.8,WB:18		DB:27,WB:19		DB:28.2,WB:20		DB:30.7,WB:22		DB:32,WB:24	
		TC	PI	TC	PI	TC	PI	TC	PI	TC	PI	TC	PI	TC	PI
		kW	kW	kW	kW	kW	kW	kW	kW	kW	kW	kW	kW	kW	kW
50%	-5	11.60	1.12	12.88	1.23	15.46	1.51	16.75	1.64	18.04	1.77	20.62	2.16	23.19	2.53
	-2	11.60	1.14	12.88	1.25	15.46	1.52	16.75	1.66	18.04	1.77	20.62	2.22	23.19	2.55
	0	11.60	1.15	12.88	1.26	15.46	1.52	16.75	1.70	18.04	1.79	20.62	2.22	23.19	2.57
	2	11.60	1.15	12.88	1.26	15.46	1.53	16.75	1.70	18.04	1.80	20.62	2.28	23.19	2.61
	4	11.60	1.15	12.88	1.28	15.46	1.57	16.75	1.71	18.04	1.82	20.62	2.29	23.19	2.70
	6	11.60	1.16	12.88	1.29	15.46	1.58	16.75	1.71	18.04	1.90	20.62	2.30	23.19	2.72
	8	11.60	1.16	12.88	1.30	15.46	1.60	16.75	1.74	18.04	1.92	20.62	2.34	23.19	2.78
	10	11.60	1.17	12.88	1.31	15.46	1.62	16.75	1.76	18.04	1.96	20.62	2.43	23.19	2.82
	12	11.60	1.19	12.88	1.32	15.46	1.63	16.75	1.77	18.04	1.98	20.62	2.43	23.19	2.89
	14	11.60	1.21	12.88	1.32	15.46	1.69	16.75	1.84	18.04	2.10	20.62	2.57	23.19	2.89
	16	11.60	1.22	12.88	1.32	15.46	1.73	16.75	2.10	18.04	2.33	20.62	2.64	23.19	2.91
	18	11.60	1.26	12.88	1.52	15.46	2.09	16.75	2.23	18.04	2.39	20.62	2.67	23.19	2.95
	20	11.60	1.27	12.88	1.64	15.46	2.13	16.75	2.23	18.04	2.39	20.62	2.67	23.19	2.98
	21	11.60	1.43	12.88	1.71	15.46	2.14	16.75	2.27	18.04	2.41	20.62	2.71	23.19	3.03
	23	11.60	1.48	12.88	1.85	15.46	2.19	16.75	2.34	18.04	2.49	20.62	2.72	23.19	3.05
	25	11.60	1.60	12.88	1.86	15.46	2.27	16.75	2.39	18.04	2.53	20.62	2.80	23.19	3.11
	27	11.60	1.72	12.88	1.89	15.46	2.39	16.75	2.53	18.04	2.66	20.62	2.92	23.19	3.24
	29	11.60	1.77	12.88	1.91	15.46	2.58	16.75	2.72	18.04	2.86	20.62	3.13	23.19	3.51
	31	11.60	1.77	12.88	2.07	15.46	2.79	16.75	2.94	18.04	3.09	20.62	3.39	23.19	3.79
	33	11.60	1.96	12.88	2.26	15.46	3.01	16.75	3.18	18.04	3.34	20.62	3.66	23.19	4.10
	35	11.60	2.15	12.88	2.47	15.46	3.24	16.75	3.42	18.04	3.60	20.62	3.94	23.19	4.42
	37	11.60	2.41	12.88	2.68	15.46	3.48	16.75	3.67	18.04	3.87	20.62	4.25	23.19	4.77
	39	11.60	2.61	12.88	2.91	15.46	3.74	16.75	3.95	18.04	4.16	20.62	4.57	23.19	5.14
	41	11.60	2.85	12.88	3.16	15.46	4.01	16.75	4.25	18.04	4.48	20.62	4.93	23.19	5.52
	43	11.60	3.08	12.88	3.41	15.46	4.31	16.75	4.56	18.04	4.81	20.62	5.29	23.19	5.95
	45	11.60	3.34	12.88	3.70	15.46	4.62	16.75	4.89	18.04	5.16	20.62	5.69	23.19	6.40
	48	11.60	3.76	12.88	4.24	15.46	5.13	16.75	5.44	18.04	5.74	20.09	6.15	20.18	6.00
	50	11.60	4.51	12.88	4.84	15.46	5.50	16.00	5.55	16.05	5.42	16.28	5.22	16.57	5.18
	52	11.60	4.82	11.80	4.75	12.01	4.59	11.98	4.48	12.32	4.51	12.54	4.45	12.86	4.48

Abbreviations:
CR: Combination ratio
TC: Total capacity (kW)
PI: Power input (compressor + outdoor fan motor) (kW)

Notes:
Shaded cells indicate rating condition.

Table 2-9.4: 14HP cooling capacity

Combination (%) (Capacity index)	Outdoor temperature (°C DB)	Indoor temperature(°C DB/WB)													
		DB:22,WB:15		DB:23.3,WB:16		DB:25.8,WB:18		DB:27,WB:19		DB:28.2,WB:20		DB:30.7,WB:22		DB:32,WB:24	
		TC	PI	TC	PI	TC	PI	TC	PI	TC	PI	TC	PI	TC	PI
		kW	kW	kW	kW	kW	kW	kW	kW	kW	kW	kW	kW	kW	kW
130%	-5	36.00	4.11	40.00	4.47	48.00	5.85	52.00	6.85	56.00	7.52	64.00	8.84	72.00	10.90
	-2	36.00	4.13	40.00	4.52	48.00	6.12	52.00	6.89	56.00	7.55	64.00	9.20	72.00	10.97
	0	36.00	4.15	40.00	4.62	48.00	6.16	52.00	6.91	56.00	7.61	64.00	9.38	72.00	11.04
	2	36.00	4.16	40.00	4.62	48.00	6.21	52.00	6.96	56.00	7.68	64.00	9.46	72.00	11.26
	4	36.00	4.18	40.00	4.65	48.00	6.21	52.00	6.97	56.00	7.76	64.00	9.50	72.00	11.40
	6	36.00	4.24	40.00	4.67	48.00	6.28	52.00	7.00	56.00	7.91	64.00	9.59	72.00	11.48
	8	36.00	4.27	40.00	4.70	48.00	6.30	52.00	7.23	56.00	7.91	64.00	9.60	72.00	11.64
	10	36.00	4.31	40.00	4.83	48.00	6.46	52.00	7.34	56.00	8.14	64.00	9.72	72.00	11.70
	12	36.00	4.40	40.00	4.99	48.00	6.62	52.00	7.50	56.00	8.27	64.00	9.88	72.00	12.09
	14	36.00	4.52	40.00	5.07	48.00	6.86	52.00	7.61	56.00	8.37	64.00	9.92	70.18	11.01
	16	36.00	4.72	40.00	5.28	48.00	7.07	52.00	7.65	56.00	8.43	64.00	10.14	68.41	11.00
	18	36.00	5.08	40.00	5.73	48.00	7.09	52.00	7.81	56.00	8.45	64.00	10.31	66.51	11.02
	20	36.00	5.50	40.00	5.96	48.00	7.22	52.00	8.13	56.00	9.10	64.00	11.10	64.69	11.01
	21	36.00	5.69	40.00	6.21	48.00	7.50	52.00	8.44	56.00	9.43	62.12	11.00	63.77	11.03
	23	36.00	6.10	40.00	6.66	48.00	8.16	52.00	9.13	56.00	10.21	60.36	11.01	62.01	11.00
	25	36.00	6.53	40.00	7.14	48.00	8.81	52.00	9.85	56.00	10.93	58.51	11.01	60.25	11.04
	27	36.00	6.99	40.00	7.63	48.00	9.50	52.00	10.61	53.70	10.99	56.63	10.98	58.38	11.02
	29	36.00	7.46	40.00	8.14	48.00	10.22	50.55	11.00	51.93	11.01	54.88	11.01	56.51	11.01
	31	36.00	7.95	40.00	8.69	48.00	11.02	48.86	11.02	50.22	11.03	53.09	10.99	54.54	11.00
	33	36.00	8.47	40.00	9.38	45.73	10.99	47.11	11.03	48.44	11.01	51.46	11.07	52.66	10.98
	35	36.00	9.03	40.00	10.11	44.05	11.00	45.32	11.00	46.85	11.07	49.60	11.07	51.23	11.18
	37	36.00	9.66	40.00	10.90	42.35	11.00	43.62	11.02	45.04	11.06	47.65	11.04	49.35	11.16
	39	36.00	10.37	38.19	10.98	40.67	10.98	42.01	11.04	43.21	11.02	45.77	11.01	47.92	11.34
	41	36.00	11.22	36.53	10.98	39.07	11.05	40.20	11.03	41.33	11.00	44.33	11.20	45.55	11.07
	43	33.65	10.99	34.83	10.99	37.29	11.02	38.57	11.10	39.39	10.99	42.34	11.18	43.33	11.08
	45	31.95	11.02	32.97	10.98	35.31	11.04	36.57	11.12	37.39	10.99	40.20	11.18	41.13	11.08
	48	29.33	11.05	30.28	11.01	32.38	11.05	34.14	11.33	33.71	10.77	34.57	10.27	35.21	10.16
	50	26.16	10.42	26.23	10.04	26.73	9.51	27.11	9.36	26.93	8.98	27.61	8.69	28.71	8.76
	52	19.87	8.46	20.19	8.28	21.20	8.15	20.00	7.56	20.74	7.60	19.88	7.05	20.62	7.09
120%	-5	33.23	3.86	36.92	4.19	44.31	5.49	48.00	6.13	51.69	6.83	59.08	8.28	66.46	9.68
	-2	33.23	3.89	36.92	4.20	44.31	5.51	48.00	6.25	51.69	6.92	59.08	8.32	66.46	9.82
	0	33.23	3.92	36.92	4.24	44.31	5.51	48.00	6.26	51.69	6.95	59.08	8.35	66.46	9.84
	2	33.23	3.93	36.92	4.25	44.31	5.59	48.00	6.30	51.69	6.95	59.08	8.41	66.46	10.02
	4	33.23	3.96	36.92	4.31	44.31	5.66	48.00	6.35	51.69	7.03	59.08	8.67	66.46	10.11
	6	33.23	4.00	36.92	4.33	44.31	5.69	48.00	6.57	51.69	7.23	59.08	8.70	66.46	10.14
	8	33.23	4.01	36.92	4.37	44.31	5.90	48.00	6.59	51.69	7.30	59.08	8.84	66.46	10.26
	10	33.23	4.05	36.92	4.48	44.31	5.90	48.00	6.73	51.69	7.41	59.08	8.95	66.46	10.30
	12	33.23	4.16	36.92	4.58	44.31	6.03	48.00	6.89	51.69	7.49	59.08	8.95	66.46	10.48
	14	33.23	4.24	36.92	4.70	44.31	6.39	48.00	6.94	51.69	7.66	59.08	9.06	66.46	10.70
	16	33.23	4.40	36.92	4.96	44.31	6.42	48.00	7.13	51.69	7.73	59.08	9.12	66.46	10.76
	18	33.23	4.71	36.92	5.38	44.31	6.52	48.00	7.15	51.69	7.91	59.08	9.14	65.00	11.20
	20	33.23	5.18	36.92	5.60	44.31	6.59	48.00	7.17	51.69	8.03	59.08	9.76	63.25	11.17
	21	33.23	5.32	36.92	5.77	44.31	6.76	48.00	7.45	51.69	8.34	59.08	10.13	62.33	11.17
	23	33.23	5.71	36.92	6.21	44.31	7.26	48.00	8.11	51.69	9.02	59.08	10.89	60.55	11.19
	25	33.23	6.11	36.92	6.64	44.31	7.81	48.00	8.76	51.69	9.69	57.21	11.17	58.87	11.17
	27	33.23	6.53	36.92	7.11	44.31	8.46	48.00	9.44	51.69	10.46	55.56	11.19	57.09	11.16
	29	33.23	6.96	36.92	7.57	44.31	9.15	48.00	10.16	51.69	11.28	53.73	11.19	55.30	11.16
	31	33.23	7.42	36.92	8.09	44.31	9.86	48.00	10.97	49.18	11.17	52.00	11.18	53.71	11.27
	33	33.23	7.91	36.92	8.63	44.31	10.63	46.18	11.16	47.55	11.18	50.45	11.24	51.91	11.24
	35	33.23	8.42	36.92	9.20	43.33	11.17	44.52	11.17	45.81	11.20	48.66	11.22	50.21	11.35
	37	33.23	8.96	36.92	9.84	41.70	11.18	42.84	11.16	44.15	11.16	46.86	11.21	48.39	11.33
	39	33.23	9.57	36.92	10.60	40.04	11.19	41.17	11.19	42.51	11.22	45.04	11.19	46.56	11.30
	41	33.23	10.24	36.01	11.17	38.34	11.20	39.62	11.22	40.74	11.19	43.15	11.16	44.73	11.27
	43	33.23	11.01	34.40	11.18	36.80	11.23	37.86	11.19	39.16	11.28	41.73	11.36	42.76	11.25
	45	31.66	11.18	32.75	11.18	35.01	11.22	36.00	11.20	36.96	11.18	39.69	11.37	41.18	11.47
	48	29.01	11.20	30.09	11.21	32.16	11.24	33.31	11.32	33.53	10.95	34.28	10.49	33.82	9.90
	50	25.91	10.51	26.24	10.24	26.73	9.72	27.21	9.55	26.99	9.19	27.09	8.67	28.15	8.74
	52	19.60	8.46	19.33	8.08	20.90	8.15	19.74	7.55	20.46	7.59	22.02	7.68	20.36	7.08

Abbreviations:
CR: Combination ratio
TC: Total capacity (kW)
PI: Power input (compressor + outdoor fan motor) (kW)

Notes:
1.Shaded cells indicate rating condition.

Table continued on next page ...

Table 2-9.4: 14HP cooling capacity (continued)

Combination (%) (Capacity index)	Outdoor temperature (°C DB)	Indoor temperature(°C DB/WB)													
		DB:22,WB:15		DB:23.3,WB:1		DB:25.8,WB:1		DB:27,WB:19		DB:28.2,WB:2		DB:30.7,WB:2		DB:32,WB:24	
		TC	PI	TC	PI	TC	PI	TC	PI	TC	PI	TC	PI	TC	PI
		kW	kW	kW	kW	kW	kW	kW	kW	kW	kW	kW	kW	kW	kW
110%	-5	30.4	3.63	33.85	3.89	40.62	4.86	44.0	5.51	47.38	6.18	54.15	7.53	60.9	8.64
	-2	30.4	3.64	33.85	3.97	40.62	4.95	44.0	5.60	47.38	6.32	54.15	7.60	60.9	8.67
	0	30.4	3.65	33.85	3.98	40.62	4.99	44.0	5.70	47.38	6.34	54.15	7.71	60.9	8.74
	2	30.4	3.69	33.85	4.02	40.62	5.03	44.0	5.85	47.38	6.45	54.15	7.81	60.9	8.93
	4	30.4	3.71	33.85	4.02	40.62	5.10	44.0	5.88	47.38	6.49	54.15	7.86	60.9	8.96
	6	30.4	3.76	33.85	4.08	40.62	5.22	44.0	5.88	47.38	6.58	54.15	7.89	60.9	9.23
	8	30.4	3.78	33.85	4.09	40.62	5.22	44.0	5.89	47.38	6.59	54.15	8.02	60.9	9.24
	10	30.4	3.79	33.85	4.15	40.62	5.25	44.0	6.13	47.38	6.72	54.15	8.12	60.9	9.28
	12	30.4	3.87	33.85	4.21	40.62	5.39	44.0	6.24	47.38	6.90	54.15	8.20	60.9	9.40
	14	30.4	3.96	33.85	4.37	40.62	5.76	44.0	6.39	47.38	6.94	54.15	8.39	60.9	9.45
	16	30.4	4.09	33.85	4.53	40.62	5.92	44.0	6.45	47.38	6.97	54.15	8.39	60.9	9.54
	18	30.4	4.35	33.85	4.96	40.62	6.05	44.0	6.45	47.38	7.12	54.15	8.42	60.9	9.92
	20	30.4	4.87	33.85	5.25	40.62	6.16	44.0	6.61	47.38	7.22	54.15	8.62	60.9	10.6
	21	30.4	4.97	33.85	5.39	40.62	6.21	44.0	6.66	47.38	7.42	54.15	8.74	60.9	11.0
	23	30.4	5.33	33.85	5.76	40.62	6.67	44.0	7.17	47.38	7.86	54.15	9.48	59.1	11.3
	25	30.4	5.69	33.85	6.15	40.62	7.15	44.0	7.70	47.38	8.49	54.15	10.21	57.4	11.3
	27	30.4	6.08	33.85	6.58	40.62	7.66	44.0	8.28	47.38	9.19	54.15	10.99	55.7	11.3
	29	30.4	6.48	33.85	7.02	40.62	8.17	44.0	8.96	47.38	9.91	52.61	11.33	53.9	11.3
	31	30.4	6.89	33.85	7.47	40.62	8.74	44.0	9.69	47.38	10.66	50.93	11.37	52.2	11.3
	33	30.4	7.32	33.85	7.98	40.62	9.38	44.0	10.4	47.38	11.51	49.16	11.35	50.7	11.4
	35	30.4	7.81	33.85	8.50	40.62	10.17	44.0	11.2	44.94	11.39	47.50	11.38	48.9	11.4
	37	30.4	8.30	33.85	9.05	40.62	10.98	42.0	11.3	43.23	11.36	45.89	11.38	47.2	11.3
	39	30.4	8.85	33.85	9.68	39.26	11.33	40.4	11.3	41.62	11.36	44.16	11.36	45.6	11.4
	41	30.4	9.47	33.85	10.35	37.68	11.34	38.7	11.3	40.05	11.37	42.40	11.33	43.8	11.4
	43	30.4	10.1	33.85	11.16	36.07	11.34	37.2	11.3	38.32	11.35	40.98	11.55	42.0	11.4
	45	30.4	10.8	32.29	11.33	34.42	11.34	35.5	11.3	36.49	11.35	39.09	11.54	40.5	11.6
	48	28.7	11.3	29.72	11.35	31.89	11.44	32.9	11.5	33.16	11.15	34.05	10.65	33.5	10.0
	50	25.6	10.6	25.94	10.34	26.23	9.69	27.1	9.74	26.44	9.17	27.24	8.85	27.5	8.72
	52	19.3	8.45	20.11	8.49	19.98	7.93	19.4	7.54	20.17	7.58	21.67	7.67	20.0	7.07
100%	-5	27.6	3.35	30.77	3.69	36.92	4.57	40.0	4.88	43.08	5.81	49.23	6.97	55.3	7.83
	-2	27.6	3.42	30.77	3.69	36.92	4.57	40.0	5.21	43.08	5.83	49.23	7.05	55.3	8.05
	0	27.6	3.43	30.77	3.70	36.92	4.58	40.0	5.23	43.08	5.85	49.23	7.06	55.3	8.09
	2	27.6	3.47	30.77	3.72	36.92	4.60	40.0	5.24	43.08	5.87	49.23	7.06	55.3	8.15
	4	27.6	3.48	30.77	3.75	36.92	4.64	40.0	5.26	43.08	5.90	49.23	7.10	55.3	8.15
	6	27.6	3.50	30.77	3.78	36.92	4.64	40.0	5.29	43.08	5.92	49.23	7.11	55.3	8.34
	8	27.6	3.50	30.77	3.79	36.92	4.72	40.0	5.37	43.08	6.00	49.23	7.13	55.3	8.35
	10	27.6	3.51	30.77	3.84	36.92	4.73	40.0	5.44	43.08	6.05	49.23	7.25	55.3	8.41
	12	27.6	3.58	30.77	3.92	36.92	4.74	40.0	5.52	43.08	6.17	49.23	7.34	55.3	8.50
	14	27.6	3.63	30.77	4.03	36.92	5.12	40.0	5.70	43.08	6.34	49.23	7.44	55.3	8.59
	16	27.6	3.79	30.77	4.15	36.92	5.26	40.0	5.91	43.08	6.42	49.23	7.46	55.3	8.65
	18	27.6	3.98	30.77	4.44	36.92	5.41	40.0	5.99	43.08	6.49	49.23	7.54	55.3	8.83
	20	27.6	4.42	30.77	4.88	36.92	5.62	40.0	6.10	43.08	6.62	49.23	7.73	55.3	9.06
	21	27.6	4.63	30.77	5.00	36.92	5.74	40.0	6.13	43.08	6.63	49.23	7.77	55.3	9.41
	23	27.6	4.93	30.77	5.31	36.92	6.11	40.0	6.54	43.08	6.95	49.23	8.09	55.3	10.1
	25	27.6	5.28	30.77	5.69	36.92	6.54	40.0	7.01	43.08	7.48	49.23	8.73	55.3	10.9
	27	27.6	5.64	30.77	6.07	36.92	6.99	40.0	7.47	43.08	7.98	49.23	9.45	55.3	11.7
	29	27.6	5.99	30.77	6.47	36.92	7.47	40.0	8.00	43.08	8.55	49.23	10.22	52.7	11.5
	31	27.6	6.38	30.77	6.89	36.92	7.97	40.0	8.55	43.08	9.25	49.23	11.01	51.0	11.5
	33	27.6	6.77	30.77	7.34	36.92	8.51	40.0	9.13	43.08	9.98	47.99	11.54	49.4	11.5
	35	27.6	7.20	30.77	7.80	36.92	9.08	40.0	9.83	43.08	10.83	46.39	11.53	47.6	11.5
	37	27.6	7.65	30.77	8.30	36.92	9.69	40.0	10.6	43.08	11.68	44.78	11.55	46.1	11.5
	39	27.6	8.14	30.77	8.86	36.92	10.42	40.0	11.4	40.73	11.54	43.12	11.54	44.4	11.5
	41	27.6	8.69	30.77	9.46	36.92	11.26	38.1	11.5	39.19	11.54	41.68	11.63	42.9	11.6
	43	27.6	9.28	30.77	10.12	35.47	11.56	36.4	11.5	37.50	11.53	40.00	11.60	41.1	11.6
	45	27.6	9.93	30.77	10.87	33.85	11.51	34.8	11.5	35.96	11.51	38.23	11.59	39.2	11.6
	48	27.6	11.0	29.39	11.53	31.33	11.53	32.3	11.5	32.52	11.23	33.08	10.63	33.2	10.2
	50	25.3	10.7	25.54	10.41	26.13	9.89	26.0	9.51	26.45	9.35	26.57	8.85	26.9	8.69
	52	19.0	8.44	19.28	8.27	20.22	8.13	20.3	7.96	19.85	7.57	21.30	7.65	19.7	7.06

Abbreviations:
CR: Combination ratio
TC: Total capacity (kW)
PI: Power input (compressor + outdoor fan motor) (kW)

Notes:
1.Shaded cells indicate rating condition.

Table continued on next page ...

Table 2-9.4: 14HP cooling capacity (continued)

Combination (%) (Capacity index)	Outdoor temperature (°C DB)	Indoor temperature(°C DB/WB)													
		DB:22,WB:15		DB:23.3,WB:16		DB:25.8,WB:18		DB:27,WB:19		DB:28.2,WB:20		DB:30.7,WB:22		DB:32,WB:24	
		TC	PI	TC	PI	TC	PI	TC	PI	TC	PI	TC	PI	TC	PI
		kW	kW	kW	kW	kW	kW	kW	kW	kW	kW	kW	kW	kW	kW
90%	-5	24.92	3.08	27.69	3.29	33.23	3.81	36.00	4.35	38.77	5.01	44.31	6.07	49.85	7.08
	-2	24.92	3.09	27.69	3.30	33.23	3.89	36.00	4.39	38.77	5.02	44.31	6.10	49.85	7.10
	0	24.92	3.13	27.69	3.35	33.23	3.90	36.00	4.41	38.77	5.09	44.31	6.16	49.85	7.14
	2	24.92	3.13	27.69	3.37	33.23	3.92	36.00	4.44	38.77	5.12	44.31	6.17	49.85	7.14
	4	24.92	3.13	27.69	3.39	33.23	3.97	36.00	4.54	38.77	5.12	44.31	6.32	49.85	7.15
	6	24.92	3.16	27.69	3.41	33.23	4.09	36.00	4.61	38.77	5.15	44.31	6.34	49.85	7.17
	8	24.92	3.20	27.69	3.45	33.23	4.11	36.00	4.63	38.77	5.23	44.31	6.39	49.85	7.18
	10	24.92	3.20	27.69	3.46	33.23	4.20	36.00	4.72	38.77	5.34	44.31	6.41	49.85	7.37
	12	24.92	3.26	27.69	3.51	33.23	4.29	36.00	4.82	38.77	5.51	44.31	6.49	49.85	7.40
	14	24.92	3.29	27.69	3.69	33.23	4.34	36.00	4.96	38.77	5.51	44.31	6.58	49.85	7.50
	16	24.92	3.36	27.69	3.74	33.23	4.53	36.00	5.29	38.77	5.74	44.31	6.61	49.85	7.58
	18	24.92	3.55	27.69	3.96	33.23	4.94	36.00	5.30	38.77	5.75	44.31	6.73	49.85	7.63
	20	24.92	3.93	27.69	4.43	33.23	5.09	36.00	5.42	38.77	5.86	44.31	6.76	49.85	7.83
	21	24.92	4.22	27.69	4.53	33.23	5.19	36.00	5.54	38.77	5.89	44.31	6.83	49.85	7.88
	23	24.92	4.48	27.69	4.81	33.23	5.44	36.00	5.78	38.77	6.15	44.31	7.01	49.85	8.14
	25	24.92	4.80	27.69	5.13	33.23	5.84	36.00	6.20	38.77	6.58	44.31	7.35	49.85	8.81
	27	24.92	5.11	27.69	5.48	33.23	6.23	36.00	6.63	38.77	7.04	44.31	7.84	49.85	9.51
	29	24.92	5.44	27.69	5.83	33.23	6.65	36.00	7.09	38.77	7.53	44.31	8.41	49.85	10.25
	31	24.92	5.78	27.69	6.20	33.23	7.09	36.00	7.56	38.77	8.03	44.31	9.01	49.85	11.07
	33	24.92	6.12	27.69	6.58	33.23	7.55	36.00	8.05	38.77	8.57	44.31	9.74	48.54	11.52
	35	24.92	6.50	27.69	7.00	33.23	8.04	36.00	8.58	38.77	9.13	44.31	10.54	46.88	11.53
	37	24.92	6.91	27.69	7.44	33.23	8.57	36.00	9.15	38.77	9.78	44.31	11.37	45.23	11.51
	39	24.92	7.32	27.69	7.91	33.23	9.13	36.00	9.80	38.77	10.48	42.41	11.51	43.64	11.55
	41	24.92	7.78	27.69	8.42	33.23	9.77	36.00	10.48	38.77	11.39	40.79	11.53	42.12	11.54
	43	24.92	8.30	27.69	8.98	33.23	10.46	36.00	11.29	37.03	11.54	39.26	11.55	40.46	11.52
	45	24.92	8.86	27.69	9.61	33.23	11.26	34.42	11.52	35.49	11.54	37.57	11.54	38.70	11.53
	48	24.92	9.82	27.69	10.72	30.99	11.51	31.90	11.52	32.57	11.39	33.17	10.79	33.29	10.45
	50	24.92	10.56	25.67	10.56	26.12	9.98	26.34	9.70	26.20	9.33	26.95	9.03	27.33	8.88
	52	19.23	8.54	19.28	8.25	19.63	7.91	19.74	7.73	20.42	7.77	21.25	7.64	22.02	7.69
80%	-5	22.15	2.77	24.62	2.98	29.54	3.44	32.00	3.66	34.46	4.15	39.38	5.02	44.31	5.85
	-2	22.15	2.77	24.62	3.01	29.54	3.47	32.00	3.67	34.46	4.24	39.38	5.09	44.31	5.89
	0	22.15	2.80	24.62	3.03	29.54	3.50	32.00	3.73	34.46	4.24	39.38	5.18	44.31	6.11
	2	22.15	2.81	24.62	3.04	29.54	3.55	32.00	3.77	34.46	4.32	39.38	5.27	44.31	6.23
	4	22.15	2.82	24.62	3.05	29.54	3.57	32.00	3.81	34.46	4.34	39.38	5.32	44.31	6.25
	6	22.15	2.83	24.62	3.06	29.54	3.58	32.00	3.88	34.46	4.38	39.38	5.39	44.31	6.32
	8	22.15	2.85	24.62	3.07	29.54	3.64	32.00	3.90	34.46	4.41	39.38	5.53	44.31	6.33
	10	22.15	2.87	24.62	3.11	29.54	3.65	32.00	3.94	34.46	4.44	39.38	5.57	44.31	6.38
	12	22.15	2.94	24.62	3.14	29.54	3.68	32.00	4.21	34.46	4.56	39.38	5.73	44.31	6.45
	14	22.15	2.96	24.62	3.26	29.54	3.82	32.00	4.22	34.46	4.80	39.38	5.82	44.31	6.50
	16	22.15	3.00	24.62	3.33	29.54	4.02	32.00	4.39	34.46	5.10	39.38	5.86	44.31	6.51
	18	22.15	3.14	24.62	3.52	29.54	4.35	32.00	4.69	34.46	5.11	39.38	5.90	44.31	6.57
	20	22.15	3.40	24.62	3.91	29.54	4.59	32.00	4.87	34.46	5.18	39.38	6.02	44.31	6.77
	21	22.15	3.70	24.62	4.08	29.54	4.69	32.00	4.96	34.46	5.25	39.38	6.11	44.31	6.81
	23	22.15	3.85	24.62	4.31	29.54	4.89	32.00	5.19	34.46	5.47	39.38	6.11	44.31	6.95
	25	22.15	4.05	24.62	4.51	29.54	5.20	32.00	5.48	34.46	5.79	39.38	6.38	44.31	7.26
	27	22.15	4.33	24.62	4.82	29.54	5.55	32.00	5.86	34.46	6.18	39.38	6.81	44.31	7.77
	29	22.15	4.73	24.62	5.27	29.54	5.91	32.00	6.26	34.46	6.61	39.38	7.28	44.31	8.29
	31	22.15	5.01	24.62	5.57	29.54	6.29	32.00	6.66	34.46	7.04	39.38	7.79	44.31	8.87
	33	22.15	5.32	24.62	5.91	29.54	6.69	32.00	7.08	34.46	7.49	39.38	8.31	44.31	9.56
	35	22.15	5.65	24.62	6.26	29.54	7.10	32.00	7.55	34.46	7.99	39.38	8.86	44.31	10.33
	37	22.15	5.99	24.62	6.63	29.54	7.55	32.00	8.03	34.46	8.51	39.38	9.48	44.31	11.21
	39	22.15	6.37	24.62	7.04	29.54	8.03	32.00	8.55	34.46	9.08	39.38	10.12	42.78	11.55
	41	22.15	6.77	24.62	7.48	29.54	8.57	32.00	9.12	34.46	9.72	39.38	10.88	41.23	11.56
	43	22.15	7.32	24.62	7.96	29.54	9.16	32.00	9.77	34.46	10.40	38.54	11.51	39.63	11.55
	45	22.15	7.77	24.62	8.49	29.54	9.79	32.00	10.49	34.46	11.19	36.90	11.53	38.03	11.56
	48	22.15	8.59	24.62	9.39	29.54	10.92	32.00	11.73	32.30	11.53	33.01	10.96	33.24	10.60
	50	22.15	9.28	24.62	10.10	26.10	10.07	26.23	9.79	26.39	9.52	26.64	8.99	27.58	9.06
	52	19.41	8.66	19.65	8.45	20.11	8.09	20.22	7.93	20.91	7.96	20.45	7.41	21.88	7.66

Abbreviations:
CR: Combination ratio
TC: Total capacity (kW)
PI: Power input (compressor + outdoor fan motor) (kW)

Notes:
1.Shaded cells indicate rating condition.

Table continued on next page ...

Table 2-9 4: 14HP cooling capacity (continued)

Combination (%) (Capacity index)	Outdoor temperature (°C DB)	Indoor temperature(°C DB/WB)													
		DB:22,WB:15		DB:23.3,WB:16		DB:25.8,WB:18		DB:27,WB:19		DB:28.2,WB:20		DB:30.7,WB:22		DB:32,WB:24	
		TC	PI	TC	PI	TC	PI	TC	PI	TC	PI	TC	PI	TC	PI
		kW	kW	kW	kW	kW	kW	kW	kW	kW	kW	kW	kW	kW	kW
70%	-5	19.38	2.39	21.54	2.67	25.85	2.93	28.00	3.25	30.15	3.45	34.46	4.13	38.77	4.86
	-2	19.38	2.44	21.54	2.69	25.85	3.07	28.00	3.26	30.15	3.53	34.46	4.23	38.77	4.96
	0	19.38	2.47	21.54	2.70	25.85	3.07	28.00	3.31	30.15	3.55	34.46	4.27	38.77	5.00
	2	19.38	2.48	21.54	2.71	25.85	3.09	28.00	3.33	30.15	3.58	34.46	4.34	38.77	5.05
	4	19.38	2.51	21.54	2.73	25.85	3.10	28.00	3.33	30.15	3.59	34.46	4.38	38.77	5.21
	6	19.38	2.52	21.54	2.73	25.85	3.18	28.00	3.34	30.15	3.62	34.46	4.43	38.77	5.31
	8	19.38	2.54	21.54	2.74	25.85	3.20	28.00	3.39	30.15	3.70	34.46	4.57	38.77	5.38
	10	19.38	2.55	21.54	2.76	25.85	3.21	28.00	3.46	30.15	3.73	34.46	4.71	38.77	5.44
	12	19.38	2.57	21.54	2.78	25.85	3.28	28.00	3.54	30.15	3.77	34.46	4.86	38.77	5.62
	14	19.38	2.58	21.54	2.80	25.85	3.38	28.00	3.63	30.15	4.03	34.46	4.91	38.77	5.62
	16	19.38	2.69	21.54	2.88	25.85	3.48	28.00	3.85	30.15	4.11	34.46	5.03	38.77	5.69
	18	19.38	2.73	21.54	3.07	25.85	3.72	28.00	4.10	30.15	4.42	34.46	5.07	38.77	5.71
	20	19.38	2.98	21.54	3.34	25.85	4.07	28.00	4.31	30.15	4.60	34.46	5.14	38.77	5.78
	21	19.38	3.16	21.54	3.64	25.85	4.15	28.00	4.42	30.15	4.67	34.46	5.24	38.77	5.90
	23	19.38	3.34	21.54	3.85	25.85	4.36	28.00	4.60	30.15	4.85	34.46	5.33	38.77	5.97
	25	19.38	3.47	21.54	3.87	25.85	4.61	28.00	4.85	30.15	5.09	34.46	5.56	38.77	6.19
	27	19.38	3.72	21.54	4.12	25.85	4.92	28.00	5.17	30.15	5.42	34.46	5.92	38.77	6.62
	29	19.38	3.97	21.54	4.40	25.85	5.23	28.00	5.50	30.15	5.78	34.46	6.30	38.77	7.08
	31	19.38	4.24	21.54	4.68	25.85	5.56	28.00	5.85	30.15	6.15	34.46	6.72	38.77	7.57
	33	19.38	4.51	21.54	4.97	25.85	5.90	28.00	6.21	30.15	6.53	34.46	7.16	38.77	8.07
	35	19.38	4.80	21.54	5.28	25.85	6.25	28.00	6.60	30.15	6.94	34.46	7.61	38.77	8.60
	37	19.38	5.10	21.54	5.61	25.85	6.63	28.00	7.00	30.15	7.38	34.46	8.13	38.77	9.19
	39	19.38	5.50	21.54	5.97	25.85	7.03	28.00	7.45	30.15	7.86	34.46	8.66	38.77	9.81
	41	19.38	5.83	21.54	6.35	25.85	7.47	28.00	7.92	30.15	8.37	34.46	9.26	38.77	10.54
	43	19.38	6.21	21.54	6.83	25.85	7.95	28.00	8.44	30.15	8.93	34.46	9.89	38.77	11.31
	45	19.38	6.62	21.54	7.28	25.85	8.48	28.00	9.01	30.15	9.55	34.46	10.64	37.08	11.51
	48	19.38	7.32	21.54	8.03	25.85	9.38	28.00	10.02	30.15	10.63	33.06	11.27	33.35	10.97
	50	19.38	8.12	21.54	8.77	25.85	10.09	26.38	10.02	26.56	9.75	26.97	9.27	27.11	9.01
	52	19.38	8.69	19.71	8.54	19.90	8.08	20.03	7.91	20.15	7.73	20.92	7.60	20.97	7.43
60%	-5	16.62	2.02	18.46	2.23	22.15	2.65	24.00	2.87	25.85	2.96	29.54	3.34	33.23	4.02
	-2	16.62	2.13	18.46	2.31	22.15	2.66	24.00	2.87	25.85	2.99	29.54	3.42	33.23	4.05
	0	16.62	2.14	18.46	2.35	22.15	2.68	24.00	2.88	25.85	3.02	29.54	3.53	33.23	4.12
	2	16.62	2.17	18.46	2.36	22.15	2.69	24.00	2.94	25.85	3.04	29.54	3.56	33.23	4.16
	4	16.62	2.17	18.46	2.36	22.15	2.74	24.00	2.95	25.85	3.06	29.54	3.60	33.23	4.16
	6	16.62	2.17	18.46	2.36	22.15	2.76	24.00	2.95	25.85	3.12	29.54	3.61	33.23	4.25
	8	16.62	2.22	18.46	2.38	22.15	2.76	24.00	2.97	25.85	3.12	29.54	3.64	33.23	4.25
	10	16.62	2.22	18.46	2.39	22.15	2.80	24.00	3.02	25.85	3.17	29.54	3.72	33.23	4.29
	12	16.62	2.23	18.46	2.42	22.15	2.84	24.00	3.03	25.85	3.25	29.54	3.85	33.23	4.42
	14	16.62	2.25	18.46	2.43	22.15	2.88	24.00	3.08	25.85	3.32	29.54	3.98	33.23	4.48
	16	16.62	2.30	18.46	2.49	22.15	2.98	24.00	3.21	25.85	3.48	29.54	4.00	33.23	4.91
	18	16.62	2.36	18.46	2.60	22.15	3.15	24.00	3.45	25.85	3.81	29.54	4.32	33.23	4.92
	20	16.62	2.49	18.46	2.81	22.15	3.49	24.00	3.81	25.85	3.99	29.54	4.47	33.23	4.93
	21	16.62	2.64	18.46	2.97	22.15	3.62	24.00	3.84	25.85	4.08	29.54	4.49	33.23	4.97
	23	16.62	2.76	18.46	3.13	22.15	3.81	24.00	4.02	25.85	4.24	29.54	4.65	33.23	5.14
	25	16.62	2.98	18.46	3.19	22.15	3.84	24.00	4.24	25.85	4.45	29.54	4.86	33.23	5.36
	27	16.62	3.20	18.46	3.42	22.15	4.04	24.00	4.33	25.85	4.73	29.54	5.11	33.23	5.64
	29	16.62	3.42	18.46	3.66	22.15	4.31	24.00	4.71	25.85	5.04	29.54	5.44	33.23	6.03
	31	16.62	3.64	18.46	3.91	22.15	4.58	24.00	5.02	25.85	5.35	29.54	5.79	33.23	6.42
	33	16.62	3.88	18.46	4.16	22.15	4.88	24.00	5.32	25.85	5.68	29.54	6.15	33.23	6.83
	35	16.62	4.12	18.46	4.43	22.15	5.19	24.00	5.65	25.85	6.01	29.54	6.53	33.23	7.27
	37	16.62	4.38	18.46	4.71	22.15	5.62	24.00	5.98	25.85	6.38	29.54	6.93	33.23	7.73
	39	16.62	4.65	18.46	5.08	22.15	5.96	24.00	6.35	25.85	6.77	29.54	7.38	33.23	8.25
	41	16.62	4.95	18.46	5.38	22.15	6.30	24.00	6.74	25.85	7.18	29.54	7.84	33.23	8.80
	43	16.62	5.26	18.46	5.73	22.15	6.70	24.00	7.16	25.85	7.63	29.54	8.36	33.23	9.39
	45	16.62	5.61	18.46	6.10	22.15	7.13	24.00	7.73	25.85	8.14	29.54	8.93	33.23	10.08
	48	16.62	6.19	18.46	6.74	22.15	7.86	24.00	8.52	25.85	8.98	29.54	9.89	33.23	11.24
	50	16.62	7.04	18.46	7.55	22.15	8.59	24.00	9.11	25.85	9.63	26.90	9.47	26.96	9.17
	52	16.62	7.51	18.46	8.07	19.99	8.23	20.27	8.09	20.40	7.91	20.59	7.57	21.30	7.61

Abbreviations:
CR: Combination ratio
TC: Total capacity (kW)
PI: Power input (compressor + outdoor fan motor) (kW)

Notes:
Shaded cells indicate rating condition.

Table continued on next page …

Table 2-9.4: 14HP cooling capacity (continued)

Combination (%) (Capacity index)	Outdoor temperature (°C DB)	Indoor temperature(°C DB/WB)													
		DB:22,WB:15		DB:23.3,WB:16		DB:25.8,WB:18		DB:27,WB:19		DB:28.2,WB:20		DB:30.7,WB:22		DB:32,WB:24	
		TC	PI	TC	PI	TC	PI	TC	PI	TC	PI	TC	PI	TC	PI
		kW	kW	kW	kW	kW	kW	kW	kW	kW	kW	kW	kW	kW	kW
50%	-5	13.85	1.74	15.38	1.84	18.46	2.28	20.00	2.43	21.54	2.49	24.62	2.82	27.69	3.25
	-2	13.85	1.76	15.38	2.02	18.46	2.28	20.00	2.46	21.54	2.59	24.62	2.86	27.69	3.30
	0	13.85	1.78	15.38	2.04	18.46	2.29	20.00	2.48	21.54	2.61	24.62	2.91	27.69	3.31
	2	13.85	1.84	15.38	2.04	18.46	2.30	20.00	2.49	21.54	2.62	24.62	2.91	27.69	3.32
	4	13.85	1.84	15.38	2.05	18.46	2.30	20.00	2.49	21.54	2.67	24.62	2.93	27.69	3.34
	6	13.85	1.89	15.38	2.07	18.46	2.31	20.00	2.51	21.54	2.67	24.62	2.96	27.69	3.35
	8	13.85	1.89	15.38	2.07	18.46	2.32	20.00	2.52	21.54	2.69	24.62	2.98	27.69	3.40
	10	13.85	1.90	15.38	2.08	18.46	2.32	20.00	2.52	21.54	2.72	24.62	3.01	27.69	3.42
	12	13.85	1.92	15.38	2.09	18.46	2.36	20.00	2.52	21.54	2.79	24.62	3.03	27.69	3.44
	14	13.85	1.92	15.38	2.09	18.46	2.44	20.00	2.60	21.54	2.79	24.62	3.20	27.69	3.64
	16	13.85	1.97	15.38	2.10	18.46	2.44	20.00	2.74	21.54	2.88	24.62	3.35	27.69	3.71
	18	13.85	1.99	15.38	2.17	18.46	2.63	20.00	2.79	21.54	3.08	24.62	3.64	27.69	4.06
	20	13.85	2.10	15.38	2.29	18.46	2.78	20.00	3.08	21.54	3.34	24.62	3.79	27.69	4.19
	21	13.85	2.16	15.38	2.39	18.46	3.10	20.00	3.30	21.54	3.50	24.62	3.86	27.69	4.28
	23	13.85	2.29	15.38	2.52	18.46	3.13	20.00	3.46	21.54	3.66	24.62	4.02	27.69	4.42
	25	13.85	2.54	15.38	2.71	18.46	3.28	20.00	3.48	21.54	3.80	24.62	4.18	27.69	4.58
	27	13.85	2.75	15.38	2.93	18.46	3.28	20.00	3.50	21.54	3.83	24.62	4.39	27.69	4.81
	29	13.85	2.94	15.38	3.13	18.46	3.51	20.00	3.75	21.54	3.98	24.62	4.57	27.69	5.10
	31	13.85	3.13	15.38	3.34	18.46	3.75	20.00	4.00	21.54	4.35	24.62	4.85	27.69	5.43
	33	13.85	3.33	15.38	3.55	18.46	4.00	20.00	4.26	21.54	4.59	24.62	5.15	27.69	5.75
	35	13.85	3.53	15.38	3.77	18.46	4.25	20.00	4.53	21.54	4.89	24.62	5.47	27.69	6.11
	37	13.85	3.74	15.38	4.01	18.46	4.52	20.00	4.90	21.54	5.19	24.62	5.79	27.69	6.48
	39	13.85	3.97	15.38	4.25	18.46	4.81	20.00	5.20	21.54	5.50	24.62	6.15	27.69	6.88
	41	13.85	4.21	15.38	4.51	18.46	5.11	20.00	5.50	21.54	5.84	24.62	6.52	27.69	7.30
	43	13.85	4.46	15.38	4.79	18.46	5.51	20.00	5.85	21.54	6.21	24.62	7.03	27.69	7.77
	45	13.85	4.74	15.38	5.09	18.46	5.84	20.00	6.22	21.54	6.60	24.62	7.47	27.69	8.27
	48	13.85	5.19	15.38	5.60	18.46	6.43	20.00	6.85	21.54	7.36	24.62	8.20	27.69	9.14
	50	13.85	5.64	15.38	6.23	18.46	7.24	20.00	7.63	21.54	8.01	24.62	8.76	27.05	9.58
	52	13.85	6.41	15.38	6.85	18.46	7.71	20.00	8.14	20.31	8.05	20.70	7.74	20.78	7.57

Abbreviations:
CR: Combination ratio
TC: Total capacity (kW)
PI: Power input (compressor + outdoor fan motor) (kW)

Notes:
Shaded cells indicate rating condition.

Table 2-9 5: 16HP cooling capacity

Combination (%) (Capacity index)	Outdoor temperature (°C DB)	Indoor temperature(°C DB/WB)													
		DB:22,WB:15		DB:23.3,WB:16		DB:25.8,WB:18		DB:27,WB:19		DB:28.2,WB:20		DB:30.7,WB:22		DB:32,WB:24	
		TC	PI	TC	PI	TC	PI	TC	PI	TC	PI	TC	PI	TC	PI
		kW	kW	kW	kW	kW	kW	kW	kW	kW	kW	kW	kW	kW	kW
130%	-5	40.50	4.36	45.00	4.83	54.00	6.30	58.50	7.31	63.00	8.12	72.00	9.43	81.00	12.85
	-2	40.50	4.44	45.00	4.84	54.00	6.52	58.50	7.32	63.00	8.12	72.00	9.84	81.00	12.90
	0	40.50	4.45	45.00	4.90	54.00	6.61	58.50	7.39	63.00	8.18	72.00	9.92	81.00	13.07
	2	40.50	4.46	45.00	4.92	54.00	6.67	58.50	7.43	63.00	8.24	72.00	10.02	81.00	13.19
	4	40.50	4.48	45.00	4.93	54.00	6.71	58.50	7.48	63.00	8.26	72.00	10.06	78.88	13.01
	6	40.50	4.52	45.00	4.97	54.00	6.74	58.50	7.50	63.00	8.29	72.00	10.29	78.86	13.27
	8	40.50	4.57	45.00	5.02	54.00	6.75	58.50	7.71	63.00	8.52	72.00	10.47	78.53	13.52
	10	40.50	4.69	45.00	5.18	54.00	6.94	58.50	7.93	63.00	8.78	72.00	10.70	77.47	13.51
	12	40.50	4.74	45.00	5.36	54.00	7.13	58.50	8.21	63.00	9.05	72.00	10.90	76.28	13.53
	14	40.50	4.92	45.00	5.47	54.00	7.37	58.50	8.44	63.00	9.37	72.00	11.79	74.94	13.52
	16	40.50	5.17	45.00	5.88	54.00	7.85	58.50	8.95	63.00	10.05	72.00	12.89	73.54	13.51
	18	40.50	5.61	45.00	6.33	54.00	8.46	58.50	9.59	63.00	10.79	70.37	13.54	72.12	13.50
	20	40.50	6.11	45.00	6.92	54.00	9.09	58.50	10.31	63.00	11.53	68.90	13.51	70.56	13.52
	21	40.50	6.34	45.00	7.20	54.00	9.44	58.50	10.65	63.00	11.96	68.08	13.56	69.79	13.51
	23	40.50	6.79	45.00	7.80	54.00	10.10	58.50	11.42	63.00	12.79	66.51	13.51	68.28	13.57
	25	40.50	7.27	45.00	8.41	54.00	10.88	58.50	12.23	63.00	13.80	64.84	13.53	66.77	13.60
	27	40.50	7.85	45.00	9.06	54.00	11.64	58.50	13.07	60.12	13.51	62.98	13.54	64.68	13.54
	29	40.50	8.45	45.00	9.72	54.00	12.53	56.77	13.53	58.24	13.54	61.19	13.54	62.82	13.58
	31	40.50	9.11	45.00	10.45	54.00	13.41	54.98	13.54	56.22	13.51	59.36	13.59	60.59	13.53
	33	40.50	9.79	45.00	11.21	51.80	13.57	53.00	13.51	54.44	13.54	57.28	13.52	58.72	13.56
	35	40.50	10.52	45.00	12.08	49.94	13.53	51.18	13.51	52.56	13.52	55.41	13.55	56.99	13.58
	37	40.50	11.37	45.00	13.03	48.05	13.54	49.45	13.56	50.74	13.56	53.63	13.71	54.93	13.62
	39	40.50	12.25	43.73	13.56	46.16	13.52	47.66	13.61	48.91	13.60	51.33	13.51	53.00	13.64
	41	40.50	13.20	41.87	13.51	44.43	13.53	45.63	13.52	46.78	13.52	49.42	13.54	51.47	13.90
	43	38.88	13.52	40.03	13.51	42.63	13.56	43.93	13.68	44.92	13.55	47.51	13.54	49.50	13.92
	45	37.07	13.52	38.27	13.51	40.81	13.61	42.08	13.70	43.04	13.57	43.93	12.58	44.22	11.98
	48	32.69	12.38	33.12	11.99	33.43	11.02	34.14	10.88	34.30	10.54	34.54	9.87	35.88	9.97
	50	26.16	10.00	26.75	9.84	26.73	9.13	27.74	9.19	27.52	8.84	27.61	8.34	28.71	8.41
	52	19.37	7.92	19.60	7.76	21.20	7.83	20.00	7.26	20.74	7.30	19.88	6.77	20.62	6.81
120%	-5	37.38	4.16	41.54	4.51	49.85	5.93	54.00	6.58	58.15	7.35	66.46	8.87	74.77	10.58
	-2	37.38	4.18	41.54	4.51	49.85	5.96	54.00	6.65	58.15	7.39	66.46	8.91	74.77	10.62
	0	37.38	4.21	41.54	4.58	49.85	5.97	54.00	6.69	58.15	7.43	66.46	8.93	74.77	10.78
	2	37.38	4.22	41.54	4.60	49.85	6.06	54.00	6.75	58.15	7.49	66.46	9.00	74.77	10.98
	4	37.38	4.22	41.54	4.64	49.85	6.08	54.00	6.80	58.15	7.53	66.46	9.03	74.77	11.15
	6	37.38	4.27	41.54	4.68	49.85	6.09	54.00	6.84	58.15	7.77	66.46	9.28	74.77	11.68
	8	37.38	4.31	41.54	4.71	49.85	6.09	54.00	7.05	58.15	7.78	66.46	9.52	74.77	11.69
	10	37.38	4.41	41.54	4.79	49.85	6.28	54.00	7.24	58.15	8.00	66.46	9.82	74.77	12.30
	12	37.38	4.46	41.54	4.90	49.85	6.45	54.00	7.45	58.15	8.28	66.46	9.91	74.77	13.29
	14	37.38	4.58	41.54	5.07	49.85	6.68	54.00	7.68	58.15	8.52	66.46	10.19	72.95	13.74
	16	37.38	4.79	41.54	5.36	49.85	7.12	54.00	7.84	58.15	8.88	66.46	10.95	71.58	13.73
	18	37.38	5.16	41.54	5.81	49.85	7.44	54.00	8.49	58.15	9.52	66.46	11.71	70.25	13.73
	20	37.38	5.67	41.54	6.25	49.85	8.07	54.00	9.12	58.15	10.24	66.46	12.49	68.75	13.73
	21	37.38	5.88	41.54	6.46	49.85	8.39	54.00	9.46	58.15	10.59	66.46	13.03	68.07	13.75
	23	37.38	6.32	41.54	6.95	49.85	9.03	54.00	10.17	58.15	11.35	64.90	13.76	66.49	13.77
	25	37.38	6.77	41.54	7.50	49.85	9.69	54.00	10.90	58.15	12.17	63.37	13.75	64.97	13.75
	27	37.38	7.22	41.54	8.11	49.85	10.44	54.00	11.70	58.15	13.03	61.78	13.74	63.33	13.77
	29	37.38	7.72	41.54	8.72	49.85	11.15	54.00	12.57	58.15	13.99	59.85	13.77	61.54	13.82
	31	37.38	8.22	41.54	9.37	49.85	12.04	54.00	13.47	55.15	13.74	57.95	13.76	59.53	13.75
	33	37.38	8.83	41.54	10.12	49.85	12.90	52.11	13.77	53.41	13.75	56.23	13.78	57.72	13.80
	35	37.38	9.50	41.54	10.90	49.85	13.88	50.27	13.74	51.55	13.74	54.43	13.83	55.58	13.75
	37	37.38	10.25	41.54	11.74	47.23	13.73	48.48	13.74	49.75	13.77	52.42	13.75	53.75	13.78
	39	37.38	11.06	41.54	12.67	45.48	13.76	46.66	13.78	47.98	13.78	50.64	13.79	51.90	13.82
	41	37.38	11.93	41.54	13.64	43.66	13.76	45.02	13.82	46.20	13.81	48.86	13.95	50.06	13.84
	43	37.38	12.95	39.52	13.75	41.94	13.76	43.06	13.75	44.21	13.74	46.61	13.74	48.55	14.10
	45	37.38	14.03	37.84	13.75	40.19	13.79	41.28	13.77	42.33	13.76	43.19	12.77	43.87	12.41
	48	32.17	12.53	32.43	11.96	33.09	11.22	33.85	11.07	33.53	10.52	34.35	10.06	35.05	9.93
	50	26.13	10.19	26.73	10.04	26.73	9.34	26.64	8.97	27.00	8.83	27.09	8.33	28.15	8.39
	52	20.11	8.33	19.34	7.75	20.90	7.82	19.74	7.25	20.46	7.29	22.02	7.38	20.36	6.80

Abbreviations:
CR: Combination ratio
TC: Total capacity (kW)
PI: Power input (compressor + outdoor fan motor) (kW)

Notes:
1.Shaded cells indicate rating condition.

Table continued on next page ...

Table 2-9.5: 16HP cooling capacity (continued)

Combination (%) (Capacity index)	Outdoor temperature (°C DB)	Indoor temperature(°C DB/WB)													
		DB:22,WB:15		DB:23.3,WB:1		DB:25.8,WB:1		DB:27,WB:19		DB:28.2,WB:2		DB:30.7,WB:2		DB:32,WB:24	
		TC	PI	TC	PI	TC	PI	TC	PI	TC	PI	TC	PI	TC	PI
		kW	kW	kW	kW	kW	kW	kW	kW	kW	kW	kW	kW	kW	kW
110%	-5	34.2	3.87	38.08	4.17	45.69	5.30	49.5	5.93	53.31	6.67	60.92	8.09	68.5	9.26
	-2	34.2	3.90	38.08	4.24	45.69	5.31	49.5	6.00	53.31	6.69	60.92	8.09	68.5	9.27
	0	34.2	3.97	38.08	4.27	45.69	5.33	49.5	6.07	53.31	6.75	60.92	8.15	68.5	9.32
	2	34.2	3.97	38.08	4.29	45.69	5.35	49.5	6.10	53.31	6.79	60.92	8.16	68.5	9.40
	4	34.2	3.98	38.08	4.35	45.69	5.45	49.5	6.22	53.31	6.90	60.92	8.41	68.5	9.63
	6	34.2	4.00	38.08	4.36	45.69	5.47	49.5	6.36	53.31	7.05	60.92	8.45	68.5	9.70
	8	34.2	4.05	38.08	4.39	45.69	5.62	49.5	6.39	53.31	7.07	60.92	8.71	68.5	9.97
	10	34.2	4.09	38.08	4.46	45.69	5.67	49.5	6.53	53.31	7.25	60.92	8.91	68.5	10.2
	12	34.2	4.15	38.08	4.55	45.69	5.80	49.5	6.68	53.31	7.46	60.92	9.03	68.5	10.5
	14	34.2	4.25	38.08	4.70	45.69	6.21	49.5	6.93	53.31	7.72	60.92	9.21	68.5	11.2
	16	34.2	4.42	38.08	4.95	45.69	6.36	49.5	7.15	53.31	7.90	60.92	9.47	68.5	12.2
	18	34.2	4.70	38.08	5.34	45.69	6.43	49.5	7.35	53.31	8.25	60.92	10.15	68.5	13.3
	20	34.2	5.25	38.08	5.74	45.69	7.04	49.5	7.95	53.31	8.94	60.92	10.90	66.9	13.9
	21	34.2	5.45	38.08	5.96	45.69	7.33	49.5	8.27	53.31	9.27	60.92	11.25	66.2	13.9
	23	34.2	5.85	38.08	6.41	45.69	7.93	49.5	8.92	53.31	9.92	60.92	12.11	64.7	13.9
	25	34.2	6.27	38.08	6.86	45.69	8.56	49.5	9.60	53.31	10.65	60.92	12.97	63.1	13.9
	27	34.2	6.69	38.08	7.32	45.69	9.19	49.5	10.2	53.31	11.44	60.92	13.90	61.7	13.9
	29	34.2	7.12	38.08	7.83	45.69	9.88	49.5	11.0	53.31	12.32	58.53	13.96	60.0	13.9
	31	34.2	7.59	38.08	8.36	45.69	10.64	49.5	11.8	53.31	13.24	56.70	13.99	58.2	13.9
	33	34.2	8.09	38.08	9.01	45.69	11.46	49.5	12.7	53.31	14.19	54.81	13.95	56.4	14.0
	35	34.2	8.63	38.08	9.70	45.69	12.33	49.5	13.7	50.53	14.00	53.02	13.96	54.5	13.9
	37	34.2	9.21	38.08	10.44	45.69	13.24	47.5	13.9	48.73	13.97	51.41	14.01	52.8	14.0
	39	34.2	9.89	38.08	11.30	44.65	13.97	45.7	13.9	46.95	13.95	49.67	14.07	50.7	13.9
	41	34.2	10.7	38.08	12.20	42.90	13.98	44.0	13.9	45.27	13.99	47.72	13.98	48.9	14.0
	43	34.2	11.5	38.08	13.20	41.20	14.01	42.2	13.9	43.54	14.04	46.03	14.15	47.1	14.0
	45	34.2	12.5	37.25	13.94	39.46	13.96	40.5	13.9	41.79	14.08	42.72	13.21	43.0	12.5
	48	31.7	12.7	32.09	12.24	32.76	11.40	32.9	11.0	33.20	10.70	34.05	10.23	33.5	9.69
	50	25.6	10.1	26.18	10.03	26.74	9.51	27.1	9.37	27.06	9.00	26.55	8.31	27.5	8.37
	52	19.3	8.12	19.59	7.95	20.58	7.81	19.4	7.24	20.17	7.28	21.67	7.37	20.0	6.79
100%	-5	31.1	3.63	34.62	3.92	41.54	4.71	45.0	5.49	48.46	5.92	55.38	7.46	62.3	8.31
	-2	31.1	3.66	34.62	3.96	41.54	4.72	45.0	5.50	48.46	6.14	55.38	7.50	62.3	8.32
	0	31.1	3.67	34.62	3.97	41.54	4.72	45.0	5.53	48.46	6.16	55.38	7.57	62.3	8.39
	2	31.1	3.70	34.62	4.00	41.54	4.84	45.0	5.56	48.46	6.26	55.38	7.58	62.3	8.47
	4	31.1	3.73	34.62	4.02	41.54	4.87	45.0	5.63	48.46	6.27	55.38	7.62	62.3	8.69
	6	31.1	3.74	34.62	4.03	41.54	4.99	45.0	5.64	48.46	6.29	55.38	7.65	62.3	8.74
	8	31.1	3.76	34.62	4.08	41.54	4.99	45.0	5.65	48.46	6.34	55.38	7.87	62.3	8.98
	10	31.1	3.77	34.62	4.14	41.54	5.00	45.0	5.81	48.46	6.51	55.38	8.06	62.3	9.24
	12	31.1	3.85	34.62	4.22	41.54	5.13	45.0	5.98	48.46	6.70	55.38	8.14	62.3	9.52
	14	31.1	3.92	34.62	4.32	41.54	5.27	45.0	6.19	48.46	7.04	55.38	8.24	62.3	9.58
	16	31.1	4.06	34.62	4.49	41.54	5.66	45.0	6.37	48.46	7.09	55.38	8.31	62.3	10.2
	18	31.1	4.29	34.62	4.80	41.54	5.86	45.0	6.58	48.46	7.10	55.38	8.64	62.3	11.0
	20	31.1	4.78	34.62	5.27	41.54	6.18	45.0	6.81	48.46	7.65	55.38	9.34	62.3	11.7
	21	31.1	5.02	34.62	5.47	41.54	6.42	45.0	7.09	48.46	7.95	55.38	9.67	62.3	12.1
	23	31.1	5.38	34.62	5.86	41.54	6.89	45.0	7.67	48.46	8.57	55.38	10.41	62.3	13.0
	25	31.1	5.76	34.62	6.28	41.54	7.41	45.0	8.30	48.46	9.22	55.38	11.13	62.3	14.1
	27	31.1	6.16	34.62	6.70	41.54	7.97	45.0	8.92	48.46	9.94	55.38	12.01	59.8	14.2
	29	31.1	6.56	34.62	7.16	41.54	8.62	45.0	9.64	48.46	10.70	55.38	12.84	58.4	14.2
	31	31.1	6.99	34.62	7.63	41.54	9.30	45.0	10.3	48.46	11.51	55.38	13.85	56.6	14.2
	33	31.1	7.42	34.62	8.13	41.54	10.01	45.0	11.1	48.46	12.37	53.55	14.19	54.8	14.1
	35	31.1	7.92	34.62	8.66	41.54	10.79	45.0	12.0	48.46	13.28	51.89	14.17	53.2	14.2
	37	31.1	8.44	34.62	9.26	41.54	11.65	45.0	12.9	48.46	14.35	50.12	14.21	51.5	14.2
	39	31.1	8.99	34.62	9.94	41.54	12.55	45.0	13.9	45.90	14.18	48.37	14.19	49.7	14.2
	41	31.1	9.62	34.62	10.74	41.54	13.57	43.1	14.2	44.31	14.19	46.75	14.25	48.0	14.2
	43	31.1	10.3	34.62	11.64	40.38	14.21	41.4	14.1	42.56	14.17	44.86	14.19	46.0	14.2
	45	31.1	11.1	34.62	12.64	38.69	14.19	39.7	14.1	40.92	14.26	41.81	13.38	42.0	12.7
	48	31.1	12.6	31.62	12.44	32.14	11.47	32.5	11.2	32.77	10.88	33.62	10.41	33.2	9.87
	50	25.4	10.3	25.62	10.01	26.59	9.71	26.0	9.13	26.95	9.20	27.19	8.70	26.9	8.35
	52	19.4	8.31	19.78	8.14	19.66	7.61	20.9	7.84	19.85	7.27	21.30	7.35	19.7	6.78

Abbreviations:
CR: Combination ratio
TC: Total capacity (kW)
PI: Power input (compressor + outdoor fan motor) (kW)

Notes:
1.Shaded cells indicate rating condition.

Table continued on next page ...

Table 2-9.5: 16HP cooling capacity (continued)

Combination (%) (Capacity index)	Outdoor temperature (°C DB)	Indoor temperature(°C DB/WB)													
		DB:22,WB:15		DB:23.3,WB:16		DB:25.8,WB:18		DB:27,WB:19		DB:28.2,WB:20		DB:30.7,WB:22		DB:32,WB:24	
		TC	PI	TC	PI	TC	PI	TC	PI	TC	PI	TC	PI	TC	PI
		kW	kW	kW	kW	kW	kW	kW	kW	kW	kW	kW	kW	kW	kW
90%	-5	28.0	3.33	31.15	3.58	37.38	4.19	40.5	4.70	43.62	5.30	49.85	6.27	56.0	7.35
	-2	28.0	3.33	31.15	3.61	37.38	4.20	40.5	4.72	43.62	5.34	49.85	6.58	56.0	7.54
	0	28.0	3.34	31.15	3.62	37.38	4.24	40.5	4.78	43.62	5.36	49.85	6.60	56.0	7.56
	2	28.0	3.38	31.15	3.63	37.38	4.25	40.5	4.81	43.62	5.38	49.85	6.67	56.0	7.67
	4	28.0	3.38	31.15	3.64	37.38	4.29	40.5	4.85	43.62	5.43	49.85	6.68	56.0	7.68
	6	28.0	3.39	31.15	3.66	37.38	4.32	40.5	4.85	43.62	5.45	49.85	6.71	56.0	7.68
	8	28.0	3.40	31.15	3.68	37.38	4.32	40.5	4.87	43.62	5.51	49.85	6.87	56.0	7.92
	10	28.0	3.41	31.15	3.71	37.38	4.39	40.5	4.98	43.62	5.61	49.85	7.05	56.0	8.17
	12	28.0	3.49	31.15	3.79	37.38	4.50	40.5	5.01	43.62	5.76	49.85	7.11	56.0	8.21
	14	28.0	3.53	31.15	3.87	37.38	4.64	40.5	5.32	43.62	5.96	49.85	7.25	56.0	8.37
	16	28.0	3.63	31.15	4.02	37.38	4.90	40.5	5.67	43.62	6.13	49.85	7.29	56.0	8.39
	18	28.0	3.84	31.15	4.29	37.38	5.31	40.5	5.70	43.62	6.27	49.85	7.48	56.0	8.83
	20	28.0	4.16	31.15	4.78	37.38	5.50	40.5	5.86	43.62	6.38	49.85	7.48	56.0	9.50
	21	28.0	4.54	31.15	4.91	37.38	5.65	40.5	6.07	43.62	6.49	49.85	7.76	56.0	9.84
	23	28.0	4.85	31.15	5.24	37.38	6.07	40.5	6.52	43.62	6.98	49.85	8.42	56.0	10.5
	25	28.0	5.18	31.15	5.61	37.38	6.50	40.5	6.98	43.62	7.52	49.85	9.05	56.0	11.3
	27	28.0	5.54	31.15	5.99	37.38	6.95	40.5	7.48	43.62	8.15	49.85	9.75	56.0	12.1
	29	28.0	5.88	31.15	6.38	37.38	7.42	40.5	7.98	43.62	8.79	49.85	10.52	56.0	13.0
	31	28.0	6.26	31.15	6.79	37.38	7.92	40.5	8.58	43.62	9.48	49.85	11.34	56.0	14.0
	33	28.0	6.65	31.15	7.23	37.38	8.46	40.5	9.26	43.62	10.23	49.85	12.21	53.9	14.2
	35	28.0	7.07	31.15	7.70	37.38	9.01	40.5	9.98	43.62	11.04	49.85	13.17	52.2	14.1
	37	28.0	7.52	31.15	8.20	37.38	9.72	40.5	10.7	43.62	11.90	49.85	14.18	50.5	14.1
	39	28.0	8.01	31.15	8.74	37.38	10.48	40.5	11.6	43.62	12.82	47.53	14.17	48.7	14.1
	41	28.0	8.54	31.15	9.33	37.38	11.37	40.5	12.6	43.62	13.87	45.84	14.21	47.2	14.2
	43	28.0	9.13	31.15	10.00	37.38	12.29	40.5	13.6	41.90	14.18	44.17	14.17	45.4	14.2
	45	28.0	9.78	31.15	10.76	37.38	13.37	39.2	14.1	40.26	14.21	41.88	13.77	42.4	13.4
	48	28.0	10.8	31.15	12.14	32.19	11.73	32.3	11.2	32.78	11.05	33.65	10.57	33.2	10.0
	50	25.5	10.4	25.81	10.20	26.38	9.68	26.3	9.33	26.18	8.97	27.53	8.88	26.7	8.32
	52	19.4	8.29	20.22	8.33	20.18	7.80	20.3	7.63	19.83	7.26	21.25	7.34	22.0	7.38
80%	-5	24.9	2.98	27.69	3.20	33.23	3.71	36.0	4.01	38.77	4.51	44.31	5.59	49.8	6.30
	-2	24.9	3.00	27.69	3.24	33.23	3.74	36.0	4.01	38.77	4.51	44.31	5.60	49.8	6.56
	0	24.9	3.03	27.69	3.26	33.23	3.77	36.0	4.03	38.77	4.51	44.31	5.61	49.8	6.57
	2	24.9	3.05	27.69	3.27	33.23	3.78	36.0	4.09	38.77	4.58	44.31	5.65	49.8	6.64
	4	24.9	3.05	27.69	3.28	33.23	3.80	36.0	4.10	38.77	4.64	44.31	5.71	49.8	6.65
	6	24.9	3.05	27.69	3.29	33.23	3.80	36.0	4.10	38.77	4.65	44.31	5.75	49.8	6.65
	8	24.9	3.05	27.69	3.29	33.23	3.88	36.0	4.15	38.77	4.66	44.31	5.79	49.8	6.69
	10	24.9	3.09	27.69	3.33	33.23	3.94	36.0	4.23	38.77	4.77	44.31	5.90	49.8	6.84
	12	24.9	3.11	27.69	3.42	33.23	3.98	36.0	4.32	38.77	4.85	44.31	6.11	49.8	7.07
	14	24.9	3.15	27.69	3.44	33.23	4.13	36.0	4.58	38.77	5.06	44.31	6.18	49.8	7.23
	16	24.9	3.24	27.69	3.57	33.23	4.27	36.0	4.70	38.77	5.42	44.31	6.29	49.8	7.27
	18	24.9	3.37	27.69	3.78	33.23	4.68	36.0	5.10	38.77	5.42	44.31	6.31	49.8	7.37
	20	24.9	3.67	27.69	4.21	33.23	4.94	36.0	5.26	38.77	5.57	44.31	6.42	49.8	7.47
	21	24.9	3.90	27.69	4.40	33.23	5.04	36.0	5.36	38.77	5.68	44.31	6.43	49.8	7.67
	23	24.9	4.36	27.69	4.67	33.23	5.33	36.0	5.68	38.77	6.04	44.31	6.79	49.8	8.32
	25	24.9	4.66	27.69	5.00	33.23	5.71	36.0	6.09	38.77	6.48	44.31	7.27	49.8	9.00
	27	24.9	4.97	27.69	5.32	33.23	6.11	36.0	6.51	38.77	6.93	44.31	7.78	49.8	9.69
	29	24.9	5.27	27.69	5.67	33.23	6.51	36.0	6.95	38.77	7.40	44.31	8.42	49.8	10.4
	31	24.9	5.60	27.69	6.02	33.23	6.93	36.0	7.42	38.77	7.91	44.31	9.08	49.8	11.2
	33	24.9	5.94	27.69	6.41	33.23	7.38	36.0	7.91	38.77	8.45	44.31	9.81	49.8	12.0
	35	24.9	6.29	27.69	6.81	33.23	7.86	36.0	8.42	38.77	9.00	44.31	10.59	49.8	13.0
	37	24.9	6.69	27.69	7.24	33.23	8.38	36.0	9.01	38.77	9.68	44.31	11.45	49.8	14.0
	39	24.9	7.10	27.69	7.69	33.23	8.95	36.0	9.61	38.77	10.46	44.31	12.41	47.8	14.2
	41	24.9	7.54	27.69	8.19	33.23	9.58	36.0	10.3	38.77	11.34	44.31	13.42	46.0	14.1
	43	24.9	8.04	27.69	8.75	33.23	10.25	36.0	11.1	38.77	12.33	43.28	14.20	44.4	14.2
	45	24.9	8.58	27.69	9.36	33.23	11.05	36.0	12.1	38.77	13.35	41.58	14.18	42.2	13.8
	48	24.9	9.52	27.69	10.43	32.30	12.11	32.5	11.6	32.67	11.20	33.06	10.52	33.2	10.1
	50	24.9	10.2	25.80	10.32	26.26	9.76	26.5	9.49	26.41	9.14	26.62	8.64	26.9	8.49
	52	19.3	8.29	19.68	8.11	20.60	7.98	20.7	7.81	20.32	7.45	21.14	7.32	21.8	7.36

Abbreviations:
CR: Combination ratio
TC: Total capacity (kW)
PI: Power input (compressor + outdoor fan motor) (kW)
Notes:
1.Shaded cells indicate rating condition.

Table continued on next page ...

Table 2-9.5: 16HP cooling capacity (continued)

Combination (%) (Capacity index)	Outdoor temperature (°C DB)	Indoor temperature(°C DB/WB)													
		DB:22,WB:15		DB:23.3,WB:16		DB:25.8,WB:18		DB:27,WB:19		DB:28.2,WB:20		DB:30.7,WB:22		DB:32,WB:24	
		TC	PI	TC	PI	TC	PI	TC	PI	TC	PI	TC	PI	TC	PI
		kW	kW	kW	kW	kW	kW	kW	kW	kW	kW	kW	kW	kW	kW
70%	-5	21.81	2.63	24.23	2.84	29.08	3.29	31.50	3.51	33.92	3.74	38.77	4.52	43.62	5.33
	-2	21.81	2.68	24.23	2.88	29.08	3.30	31.50	3.54	33.92	3.76	38.77	4.54	43.62	5.38
	0	21.81	2.69	24.23	2.90	29.08	3.30	31.50	3.54	33.92	3.80	38.77	4.56	43.62	5.39
	2	21.81	2.70	24.23	2.91	29.08	3.35	31.50	3.56	33.92	3.84	38.77	4.62	43.62	5.47
	4	21.81	2.70	24.23	2.91	29.08	3.37	31.50	3.58	33.92	3.90	38.77	4.64	43.62	5.54
	6	21.81	2.71	24.23	2.93	29.08	3.39	31.50	3.63	33.92	3.92	38.77	4.75	43.62	5.63
	8	21.81	2.73	24.23	2.95	29.08	3.41	31.50	3.64	33.92	3.93	38.77	4.81	43.62	5.66
	10	21.81	2.74	24.23	2.96	29.08	3.42	31.50	3.69	33.92	3.94	38.77	4.81	43.62	5.81
	12	21.81	2.75	24.23	2.97	29.08	3.48	31.50	3.74	33.92	4.03	38.77	5.11	43.62	5.98
	14	21.81	2.79	24.23	3.04	29.08	3.59	31.50	3.88	33.92	4.16	38.77	5.26	43.62	6.08
	16	21.81	2.83	24.23	3.12	29.08	3.72	31.50	4.03	33.92	4.43	38.77	5.46	43.62	6.12
	18	21.81	2.93	24.23	3.27	29.08	4.00	31.50	4.42	33.92	4.78	38.77	5.48	43.62	6.15
	20	21.81	3.14	24.23	3.58	29.08	4.39	31.50	4.66	33.92	4.93	38.77	5.56	43.62	6.16
	21	21.81	3.32	24.23	3.83	29.08	4.47	31.50	4.75	33.92	5.02	38.77	5.63	43.62	6.33
	23	21.81	3.61	24.23	4.05	29.08	4.69	31.50	4.97	33.92	5.24	38.77	5.78	43.62	6.61
	25	21.81	3.88	24.23	4.34	29.08	5.00	31.50	5.29	33.92	5.59	38.77	6.20	43.62	7.08
	27	21.81	4.14	24.23	4.62	29.08	5.34	31.50	5.65	33.92	5.98	38.77	6.63	43.62	7.60
	29	21.81	4.41	24.23	4.92	29.08	5.69	31.50	6.03	33.92	6.39	38.77	7.08	43.62	8.11
	31	21.81	4.70	24.23	5.23	29.08	6.04	31.50	6.43	33.92	6.80	38.77	7.55	43.62	8.76
	33	21.81	4.99	24.23	5.55	29.08	6.43	31.50	6.84	33.92	7.25	38.77	8.07	43.62	9.42
	35	21.81	5.42	24.23	5.89	29.08	6.84	31.50	7.27	33.92	7.71	38.77	8.60	43.62	10.23
	37	21.81	5.72	24.23	6.38	29.08	7.26	31.50	7.75	33.92	8.22	38.77	9.19	43.62	11.03
	39	21.81	6.09	24.23	6.75	29.08	7.72	31.50	8.25	33.92	8.78	38.77	9.84	43.62	11.96
	41	21.81	6.46	24.23	7.16	29.08	8.23	31.50	8.81	33.92	9.38	38.77	10.61	43.62	12.96
	43	21.81	6.88	24.23	7.61	29.08	8.79	31.50	9.42	33.92	10.05	38.77	11.54	43.62	14.07
	45	21.81	7.34	24.23	8.12	29.08	9.41	31.50	10.10	33.92	10.82	38.77	12.59	41.71	14.22
	48	21.81	8.23	24.23	8.99	29.08	10.49	31.50	11.30	32.74	11.60	33.12	10.87	33.39	10.53
	50	21.81	8.86	24.23	9.66	26.24	9.93	26.46	9.67	26.64	9.41	26.74	8.80	27.09	8.66
	52	19.52	8.42	19.71	8.20	19.89	7.77	20.04	7.60	20.71	7.63	20.28	7.10	21.66	7.34
60%	-5	18.69	2.27	20.77	2.47	24.92	2.83	27.00	3.04	29.08	3.30	33.23	3.65	37.38	4.35
	-2	18.69	2.33	20.77	2.53	24.92	2.84	27.00	3.05	29.08	3.31	33.23	3.67	37.38	4.38
	0	18.69	2.34	20.77	2.54	24.92	2.87	27.00	3.07	29.08	3.34	33.23	3.72	37.38	4.40
	2	18.69	2.36	20.77	2.55	24.92	2.89	27.00	3.07	29.08	3.34	33.23	3.78	37.38	4.41
	4	18.69	2.37	20.77	2.56	24.92	2.91	27.00	3.10	29.08	3.35	33.23	3.82	37.38	4.47
	6	18.69	2.38	20.77	2.56	24.92	2.95	27.00	3.13	29.08	3.38	33.23	3.82	37.38	4.52
	8	18.69	2.40	20.77	2.59	24.92	2.97	27.00	3.17	29.08	3.39	33.23	3.84	37.38	4.54
	10	18.69	2.40	20.77	2.59	24.92	3.03	27.00	3.19	29.08	3.42	33.23	3.89	37.38	4.58
	12	18.69	2.42	20.77	2.61	24.92	3.04	27.00	3.26	29.08	3.46	33.23	3.92	37.38	4.73
	14	18.69	2.45	20.77	2.62	24.92	3.08	27.00	3.35	29.08	3.59	33.23	4.19	37.38	4.90
	16	18.69	2.48	20.77	2.68	24.92	3.21	27.00	3.42	29.08	3.77	33.23	4.29	37.38	5.21
	18	18.69	2.54	20.77	2.78	24.92	3.36	27.00	3.65	29.08	4.03	33.23	4.67	37.38	5.22
	20	18.69	2.69	20.77	3.03	24.92	3.77	27.00	4.08	29.08	4.31	33.23	4.79	37.38	5.30
	21	18.69	2.81	20.77	3.20	24.92	3.92	27.00	4.15	29.08	4.40	33.23	4.85	37.38	5.36
	23	18.69	2.98	20.77	3.38	24.92	4.11	27.00	4.34	29.08	4.58	33.23	5.04	37.38	5.56
	25	18.69	3.21	20.77	3.56	24.92	4.26	27.00	4.59	29.08	4.81	33.23	5.26	37.38	5.91
	27	18.69	3.44	20.77	3.80	24.92	4.55	27.00	4.89	29.08	5.14	33.23	5.62	37.38	6.32
	29	18.69	3.68	20.77	4.06	24.92	4.84	27.00	5.21	29.08	5.48	33.23	6.00	37.38	6.75
	31	18.69	3.92	20.77	4.32	24.92	5.25	27.00	5.54	29.08	5.83	33.23	6.39	37.38	7.22
	33	18.69	4.25	20.77	4.60	24.92	5.57	27.00	5.87	29.08	6.19	33.23	6.80	37.38	7.69
	35	18.69	4.49	20.77	4.89	24.92	5.91	27.00	6.24	29.08	6.57	33.23	7.23	37.38	8.19
	37	18.69	4.78	20.77	5.29	24.92	6.26	27.00	6.62	29.08	6.99	33.23	7.72	37.38	8.75
	39	18.69	5.08	20.77	5.60	24.92	6.64	27.00	7.03	29.08	7.43	33.23	8.21	37.38	9.36
	41	18.69	5.41	20.77	5.96	24.92	7.05	27.00	7.48	29.08	7.92	33.23	8.76	37.38	10.02
	43	18.69	5.75	20.77	6.33	24.92	7.50	27.00	7.97	29.08	8.45	33.23	9.38	37.38	10.77
	45	18.69	6.14	20.77	6.75	24.92	7.99	27.00	8.51	29.08	9.02	33.23	10.06	37.38	11.74
	48	18.69	6.80	20.77	7.46	24.92	8.84	27.00	9.43	29.08	10.03	33.23	11.25	33.24	10.90
	50	18.69	7.60	20.77	8.21	24.92	9.48	27.00	10.13	26.65	9.66	27.03	9.16	27.46	9.00
	52	18.69	8.13	19.81	8.36	20.10	7.94	20.28	7.77	20.38	7.61	20.61	7.27	20.67	7.11

Abbreviations:
CR: Combination ratio
TC: Total capacity (kW)
PI: Power input (compressor + outdoor fan motor) (kW)

Notes:
Shaded cells indicate rating condition.

Table continued on next page ...

Table 2-9.5: 16HP cooling capacity (continued)

Combination (%) (Capacity index)	Outdoor temperature (°C DB)	Indoor temperature(°C DB/WB)													
		DB:22,WB:15		DB:23.3,WB:16		DB:25.8,WB:18		DB:27,WB:19		DB:28.2,WB:20		DB:30.7,WB:22		DB:32,WB:24	
		TC	PI	TC	PI	TC	PI	TC	PI	TC	PI	TC	PI	TC	PI
		kW	kW	kW	kW	kW	kW	kW	kW	kW	kW	kW	kW	kW	kW
50%	-5	15.58	1.84	17.31	2.09	20.77	2.44	22.50	2.55	24.23	2.73	27.69	3.05	31.15	3.38
	-2	15.58	1.84	17.31	2.13	20.77	2.45	22.50	2.60	24.23	2.75	27.69	3.05	31.15	3.46
	0	15.58	1.98	17.31	2.15	20.77	2.46	22.50	2.62	24.23	2.76	27.69	3.08	31.15	3.47
	2	15.58	2.00	17.31	2.20	20.77	2.47	22.50	2.64	24.23	2.79	27.69	3.11	31.15	3.53
	4	15.58	2.03	17.31	2.22	20.77	2.48	22.50	2.66	24.23	2.79	27.69	3.15	31.15	3.54
	6	15.58	2.04	17.31	2.22	20.77	2.52	22.50	2.68	24.23	2.81	27.69	3.20	31.15	3.55
	8	15.58	2.05	17.31	2.22	20.77	2.53	22.50	2.70	24.23	2.86	27.69	3.20	31.15	3.61
	10	15.58	2.07	17.31	2.24	20.77	2.55	22.50	2.70	24.23	2.92	27.69	3.20	31.15	3.65
	12	15.58	2.07	17.31	2.25	20.77	2.55	22.50	2.77	24.23	2.93	27.69	3.34	31.15	3.68
	14	15.58	2.09	17.31	2.26	20.77	2.61	22.50	2.80	24.23	2.95	27.69	3.47	31.15	3.89
	16	15.58	2.10	17.31	2.31	20.77	2.70	22.50	2.90	24.23	3.09	27.69	3.57	31.15	3.99
	18	15.58	2.16	17.31	2.36	20.77	2.77	22.50	3.05	24.23	3.29	27.69	3.89	31.15	4.39
	20	15.58	2.24	17.31	2.47	20.77	3.01	22.50	3.35	24.23	3.69	27.69	4.06	31.15	4.54
	21	15.58	2.32	17.31	2.58	20.77	3.21	22.50	3.56	24.23	3.76	27.69	4.14	31.15	4.59
	23	15.58	2.47	17.31	2.73	20.77	3.41	22.50	3.73	24.23	3.92	27.69	4.30	31.15	4.76
	25	15.58	2.73	17.31	2.93	20.77	3.55	22.50	3.75	24.23	4.14	27.69	4.50	31.15	4.95
	27	15.58	2.93	17.31	3.14	20.77	3.65	22.50	3.92	24.23	4.31	27.69	4.75	31.15	5.26
	29	15.58	3.13	17.31	3.35	20.77	3.90	22.50	4.19	24.23	4.57	27.69	5.05	31.15	5.60
	31	15.58	3.33	17.31	3.58	20.77	4.16	22.50	4.46	24.23	4.86	27.69	5.37	31.15	5.96
	33	15.58	3.54	17.31	3.81	20.77	4.42	22.50	4.74	24.23	5.16	27.69	5.71	31.15	6.34
	35	15.58	3.76	17.31	4.05	20.77	4.70	22.50	5.04	24.23	5.47	27.69	6.05	31.15	6.74
	37	15.58	4.00	17.31	4.30	20.77	5.00	22.50	5.43	24.23	5.80	27.69	6.42	31.15	7.17
	39	15.58	4.24	17.31	4.58	20.77	5.31	22.50	5.77	24.23	6.15	27.69	6.82	31.15	7.64
	41	15.58	4.51	17.31	4.87	20.77	5.65	22.50	6.13	24.23	6.53	27.69	7.25	31.15	8.14
	43	15.58	4.79	17.31	5.18	20.77	6.08	22.50	6.51	24.23	7.07	27.69	7.72	31.15	8.67
	45	15.58	5.10	17.31	5.52	20.77	6.47	22.50	6.93	24.23	7.50	27.69	8.22	31.15	9.30
	48	15.58	5.62	17.31	6.10	20.77	7.15	22.50	7.76	24.23	8.25	27.69	9.10	31.15	10.33
	50	15.58	6.45	17.31	6.92	20.77	7.86	22.50	8.35	24.23	8.83	26.95	9.49	27.12	9.22
	52	15.58	6.85	17.31	7.37	20.19	8.17	20.30	7.96	20.41	7.77	20.70	7.43	21.37	7.47

Abbreviations:
CR: Combination ratio
TC: Total capacity (kW)
PI: Power input (compressor + outdoor fan motor) (kW)

Notes:
Shaded cells indicate rating condition.

Table 2-9 6: 18HP cooling capacity

Combination (%) (Capacity index)	Outdoor temperature (°C DB)	Indoor temperature(°C DB/WB)													
		DB:22,WB:15		DB:23.3,WB:16		DB:25.8,WB:18		DB:27,WB:19		DB:28.2,WB:20		DB:30.7,WB:22		DB:32,WB:24	
		TC	PI	TC	PI	TC	PI	TC	PI	TC	PI	TC	PI	TC	PI
		kW	kW	kW	kW	kW	kW	kW	kW	kW	kW	kW	kW	kW	kW
130%	-5	45.00	4.76	50.00	5.55	60.00	7.31	65.00	8.18	70.00	9.00	80.00	12.04	85.90	14.70
	-2	45.00	4.79	50.00	5.61	60.00	7.35	65.00	8.18	70.00	9.02	80.00	12.10	85.74	14.80
	0	45.00	4.80	50.00	5.74	60.00	7.42	65.00	8.25	70.00	9.09	80.00	12.51	85.44	14.88
	2	45.00	4.82	50.00	5.88	60.00	7.49	65.00	8.32	70.00	9.12	80.00	12.58	85.12	15.01
	4	45.00	4.83	50.00	5.89	60.00	7.53	65.00	8.34	70.00	9.36	80.00	12.80	85.00	15.20
	6	45.00	4.92	50.00	5.91	60.00	7.55	65.00	8.57	70.00	9.42	80.00	13.19	84.97	15.59
	8	45.00	5.10	50.00	5.91	60.00	7.75	65.00	8.81	70.00	9.69	80.00	13.55	83.91	15.47
	10	45.00	5.12	50.00	6.08	60.00	7.97	65.00	8.92	70.00	9.98	80.00	14.01	82.82	15.45
	12	45.00	5.26	50.00	6.27	60.00	8.23	65.00	9.35	70.00	10.44	80.00	14.84	81.63	15.47
	14	45.00	5.55	50.00	6.54	60.00	8.69	65.00	9.90	70.00	11.33	80.00	15.72	80.26	15.45
	16	45.00	5.89	50.00	6.98	60.00	9.32	65.00	10.55	70.00	12.36	77.07	15.47	78.87	15.48
	18	45.00	6.44	50.00	7.56	60.00	9.99	65.00	11.29	70.00	13.35	75.54	15.45	77.37	15.46
	20	45.00	7.00	50.00	8.14	60.00	10.69	65.00	12.17	70.00	14.36	74.00	15.48	75.87	15.52
	21	45.00	7.27	50.00	8.47	60.00	11.03	65.00	12.69	70.00	14.93	73.19	15.47	74.98	15.48
	23	45.00	7.84	50.00	9.10	60.00	11.80	65.00	13.74	68.23	15.45	71.55	15.49	73.41	15.56
	25	45.00	8.45	50.00	9.75	60.00	12.64	65.00	14.82	66.54	15.47	69.81	15.48	71.66	15.52
	27	45.00	9.08	50.00	10.43	60.00	13.67	63.38	15.52	64.80	15.46	68.13	15.47	69.86	15.52
	29	45.00	9.74	50.00	11.21	60.00	14.84	61.59	15.45	63.11	15.46	66.31	15.46	68.31	15.58
	31	45.00	10.45	50.00	12.00	58.44	15.51	59.88	15.47	61.33	15.47	64.59	15.52	66.30	15.45
	33	45.00	11.23	50.00	12.90	56.66	15.46	58.11	15.52	59.52	15.47	62.74	15.48	64.46	15.53
	35	45.00	12.09	50.00	13.86	54.90	15.48	56.32	15.49	57.79	15.50	60.94	15.58	62.61	15.62
	37	45.00	13.02	50.00	14.98	53.03	15.47	54.61	15.54	55.82	15.45	58.74	15.53	60.13	15.47
	39	45.00	14.01	48.41	15.47	51.04	15.46	52.52	15.51	53.89	15.52	56.81	15.59	58.09	15.53
	41	45.00	15.14	46.45	15.45	49.14	15.47	50.45	15.48	52.09	15.59	54.76	15.67	56.06	15.59
	43	43.23	15.50	44.49	15.48	47.23	15.55	48.48	15.54	49.24	15.18	50.31	14.28	50.33	13.48
	45	41.28	15.47	41.69	14.92	42.36	13.83	42.58	13.21	43.17	12.86	43.64	11.69	43.90	11.13
	48	32.34	11.70	32.44	11.07	33.55	10.61	33.75	10.29	33.32	9.76	34.68	9.52	33.96	9.02
	50	26.46	9.82	26.12	9.26	27.12	9.00	26.35	8.46	27.38	8.52	27.45	8.04	28.58	8.11
	52	20.07	8.00	19.23	7.46	20.87	7.53	19.63	6.98	20.38	7.02	19.47	6.51	20.22	6.55
120%	-5	41.54	4.43	46.15	5.15	55.38	6.66	60.00	7.40	64.62	8.21	73.85	10.71	83.08	13.97
	-2	41.54	4.45	46.15	5.16	55.38	6.72	60.00	7.51	64.62	8.21	73.85	10.94	83.08	14.16
	0	41.54	4.48	46.15	5.22	55.38	6.79	60.00	7.56	64.62	8.30	73.85	11.11	83.08	14.38
	2	41.54	4.52	46.15	5.22	55.38	6.83	60.00	7.70	64.62	8.56	73.85	11.27	83.08	14.49
	4	41.54	4.55	46.15	5.27	55.38	6.93	60.00	7.82	64.62	8.59	73.85	11.33	83.08	14.78
	6	41.54	4.57	46.15	5.31	55.38	7.07	60.00	7.84	64.62	8.62	73.85	11.45	83.08	15.15
	8	41.54	4.60	46.15	5.32	55.38	7.08	60.00	8.06	64.62	8.88	73.85	11.51	83.08	15.69
	10	41.54	4.69	46.15	5.50	55.38	7.27	60.00	8.30	64.62	9.14	73.85	11.90	80.96	15.75
	12	41.54	4.80	46.15	5.65	55.38	7.48	60.00	8.55	64.62	9.43	73.85	12.00	79.71	15.70
	14	41.54	4.97	46.15	5.82	55.38	7.92	60.00	8.68	64.62	9.81	73.85	13.04	78.45	15.71
	16	41.54	5.26	46.15	6.23	55.38	8.22	60.00	9.32	64.62	10.48	73.85	14.01	77.05	15.70
	18	41.54	5.72	46.15	6.68	55.38	8.84	60.00	10.00	64.62	11.23	73.85	15.00	75.58	15.75
	20	41.54	6.18	46.15	7.24	55.38	9.46	60.00	10.70	64.62	12.02	73.85	16.06	74.04	15.73
	21	41.54	6.43	46.15	7.50	55.38	9.81	60.00	11.08	64.62	12.52	71.62	15.72	73.20	15.71
	23	41.54	6.99	46.15	8.10	55.38	10.52	60.00	11.84	64.62	13.58	69.98	15.73	71.63	15.77
	25	41.54	7.53	46.15	8.72	55.38	11.26	60.00	12.68	64.62	14.73	68.29	15.70	70.08	15.78
	27	41.54	8.15	46.15	9.37	55.38	12.07	60.00	13.70	64.62	15.90	66.62	15.77	68.33	15.76
	29	41.54	8.76	46.15	10.04	55.38	12.94	60.00	14.86	61.77	15.71	64.89	15.72	66.59	15.72
	31	41.54	9.41	46.15	10.80	55.38	13.89	58.67	15.73	60.12	15.76	63.14	15.74	64.75	15.72
	33	41.54	10.12	46.15	11.61	55.38	14.98	56.97	15.71	58.38	15.72	61.42	15.77	63.35	15.90
	35	41.54	10.89	46.15	12.45	53.96	15.72	55.23	15.71	56.63	15.72	59.57	15.73	61.34	15.75
	37	41.54	11.71	46.15	13.44	52.14	15.71	53.47	15.75	54.92	15.71	57.83	15.80	59.35	15.84
	39	41.54	12.64	46.15	14.50	50.28	15.72	51.61	15.76	53.07	15.80	55.66	15.76	57.41	15.92
	41	41.54	13.63	46.15	15.64	48.33	15.73	49.73	15.77	51.01	15.77	53.83	15.82	54.98	15.76
	43	41.54	14.76	43.92	15.71	46.46	15.72	47.70	15.72	48.33	15.38	49.06	14.23	49.47	13.66
	45	41.54	15.98	41.22	15.14	41.82	14.03	41.95	13.43	42.56	13.06	43.02	11.88	43.32	11.31
	48	31.93	11.80	32.17	11.29	33.37	10.80	33.59	10.47	33.21	9.94	33.97	9.50	33.27	8.99
	50	26.10	9.79	25.65	9.27	26.16	8.77	25.93	8.44	26.93	8.50	27.00	8.02	28.10	8.09
	52	19.32	7.81	19.04	7.45	20.64	7.52	19.43	6.97	20.16	7.01	19.29	6.50	20.02	6.55

Abbreviations:
CR: Combination ratio
TC: Total capacity (kW)
PI: Power input (compressor + outdoor fan motor) (kW)

Notes:
1.Shaded cells indicate rating condition.

Table continued on next page ...

Table 2-9.6: 18HP cooling capacity (continued)

Combination (%) (Capacity index)	Outdoor temperature (°C DB)	Indoor temperature(°C DB/WB)													
		DB:22,WB:15		DB:23.3,WB:1		DB:25.8,WB:1		DB:27,WB:19		DB:28.2,WB:2		DB:30.7,WB:2		DB:32,WB:24	
		TC	PI	TC	PI	TC	PI	TC	PI	TC	PI	TC	PI	TC	PI
		kW	kW	kW	kW	kW	kW	kW	kW	kW	kW	kW	kW	kW	kW
110%	-5	38.0	4.15	42.31	4.55	50.77	5.95	55.0	6.90	59.23	7.66	67.69	8.91	76.1	11.1
	-2	38.0	4.19	42.31	4.56	50.77	6.19	55.0	6.94	59.23	7.67	67.69	9.28	76.1	11.6
	0	38.0	4.20	42.31	4.61	50.77	6.29	55.0	7.03	59.23	7.74	67.69	9.50	76.1	11.7
	2	38.0	4.24	42.31	4.66	50.77	6.29	55.0	7.03	59.23	7.79	67.69	9.60	76.1	11.8
	4	38.0	4.25	42.31	4.70	50.77	6.37	55.0	7.10	59.23	7.82	67.69	9.67	76.1	12.1
	6	38.0	4.29	42.31	4.70	50.77	6.38	55.0	7.11	59.23	7.83	67.69	9.84	76.1	12.2
	8	38.0	4.30	42.31	4.72	50.77	6.40	55.0	7.31	59.23	8.04	67.69	9.97	76.1	12.5
	10	38.0	4.37	42.31	4.91	50.77	6.55	55.0	7.51	59.23	8.29	67.69	10.28	76.1	13.2
	12	38.0	4.46	42.31	4.94	50.77	6.73	55.0	7.74	59.23	8.54	67.69	10.47	76.1	14.0
	14	38.0	4.60	42.31	5.17	50.77	7.16	55.0	7.99	59.23	8.60	67.69	10.50	76.1	14.9
	16	38.0	4.82	42.31	5.36	50.77	7.21	55.0	8.10	59.23	9.12	67.69	11.18	76.1	15.9
	18	38.0	5.24	42.31	5.80	50.77	7.67	55.0	8.70	59.23	9.77	67.69	12.16	73.7	15.9
	20	38.0	5.69	42.31	6.29	50.77	8.29	55.0	9.37	59.23	10.47	67.69	13.22	72.2	15.9
	21	38.0	5.90	42.31	6.57	50.77	8.58	55.0	9.68	59.23	10.84	67.69	13.71	71.4	15.9
	23	38.0	6.32	42.31	7.11	50.77	9.25	55.0	10.3	59.23	11.59	67.69	14.84	69.8	15.9
	25	38.0	6.78	42.31	7.69	50.77	9.92	55.0	11.1	59.23	12.37	67.69	16.02	68.2	15.9
	27	38.0	7.25	42.31	8.28	50.77	10.63	55.0	11.9	59.23	13.29	65.07	16.02	66.6	15.9
	29	38.0	7.76	42.31	8.92	50.77	11.39	55.0	12.7	59.23	14.40	63.44	15.98	65.0	15.9
	31	38.0	8.38	42.31	9.56	50.77	12.26	55.0	13.7	59.23	15.66	61.70	15.96	63.3	16.0
	33	38.0	9.00	42.31	10.32	50.77	13.15	55.0	14.8	57.15	15.99	60.02	15.97	61.6	16.0
	35	38.0	9.67	42.31	11.08	50.77	14.16	55.0	16.1	55.45	16.03	58.26	15.99	59.8	16.0
	37	38.0	10.4	42.31	11.91	50.77	15.30	52.4	15.9	53.76	16.00	56.66	16.06	57.9	15.9
	39	38.0	11.2	42.31	12.88	49.40	15.96	50.7	15.9	52.03	15.97	54.74	16.01	56.0	16.0
	41	38.0	12.1	42.31	13.92	47.61	15.98	48.8	15.9	50.18	16.05	52.67	16.00	54.3	16.1
	43	38.0	13.1	42.31	15.05	45.64	15.97	46.8	15.9	47.65	15.67	48.21	14.39	48.5	13.8
	45	38.0	14.2	40.69	15.44	41.17	14.20	41.5	13.7	41.85	13.25	42.33	12.06	42.6	11.4
	48	31.4	11.9	31.71	11.39	32.13	10.58	32.8	10.4	33.02	10.11	33.82	9.67	34.5	9.56
	50	25.6	9.79	25.74	9.44	26.24	8.96	26.6	8.81	26.45	8.48	26.53	8.00	27.5	8.07
	52	19.6	7.98	18.84	7.45	20.38	7.52	19.2	6.97	19.93	7.00	21.47	7.09	19.8	6.54
100%	-5	34.6	3.84	38.46	4.19	46.15	5.54	50.0	6.19	53.85	6.84	61.54	8.30	69.2	9.84
	-2	34.6	3.88	38.46	4.21	46.15	5.55	50.0	6.22	53.85	6.90	61.54	8.31	69.2	9.95
	0	34.6	3.89	38.46	4.24	46.15	5.55	50.0	6.22	53.85	6.97	61.54	8.37	69.2	9.97
	2	34.6	3.90	38.46	4.24	46.15	5.60	50.0	6.28	53.85	7.01	61.54	8.40	69.2	10.2
	4	34.6	3.97	38.46	4.30	46.15	5.66	50.0	6.35	53.85	7.03	61.54	8.57	69.2	10.3
	6	34.6	3.99	38.46	4.34	46.15	5.69	50.0	6.39	53.85	7.26	61.54	8.66	69.2	10.4
	8	34.6	3.99	38.46	4.38	46.15	5.69	50.0	6.54	53.85	7.28	61.54	8.88	69.2	10.6
	10	34.6	4.05	38.46	4.42	46.15	5.84	50.0	6.76	53.85	7.44	61.54	9.03	69.2	10.6
	12	34.6	4.10	38.46	4.52	46.15	6.00	50.0	6.94	53.85	7.69	61.54	9.15	69.2	10.9
	14	34.6	4.23	38.46	4.69	46.15	6.40	50.0	7.14	53.85	7.73	61.54	9.16	69.2	11.6
	16	34.6	4.41	38.46	4.90	46.15	6.55	50.0	7.18	53.85	7.91	61.54	9.54	69.2	12.6
	18	34.6	4.71	38.46	5.38	46.15	6.64	50.0	7.44	53.85	8.34	61.54	10.24	69.2	13.6
	20	34.6	5.20	38.46	5.70	46.15	7.11	50.0	8.01	53.85	9.00	61.54	10.93	69.2	14.7
	21	34.6	5.39	38.46	5.91	46.15	7.37	50.0	8.32	53.85	9.28	61.54	11.34	69.2	15.2
	23	34.6	5.80	38.46	6.33	46.15	7.99	50.0	8.97	53.85	10.00	61.54	12.15	69.2	16.3
	25	34.6	6.19	38.46	6.80	46.15	8.57	50.0	9.63	53.85	10.71	61.54	13.00	66.4	16.2
	27	34.6	6.61	38.46	7.27	46.15	9.24	50.0	10.3	53.85	11.50	61.54	14.14	64.8	16.2
	29	34.6	7.06	38.46	7.78	46.15	9.92	50.0	11.0	53.85	12.36	61.54	15.33	63.3	16.2
	31	34.6	7.54	38.46	8.39	46.15	10.68	50.0	11.9	53.85	13.23	60.21	16.25	61.7	16.2
	33	34.6	8.03	38.46	9.04	46.15	11.46	50.0	12.8	53.85	14.22	58.62	16.22	59.9	16.2
	35	34.6	8.56	38.46	9.72	46.15	12.36	50.0	13.8	53.85	15.40	56.80	16.23	58.3	16.2
	37	34.6	9.20	38.46	10.49	46.15	13.29	50.0	14.8	52.52	16.28	55.18	16.26	56.6	16.2
	39	34.6	9.95	38.46	11.33	46.15	14.37	50.0	16.0	50.84	16.23	53.37	16.22	54.9	16.3
	41	34.6	10.7	38.46	12.23	46.15	15.55	47.8	16.2	49.04	16.22	51.61	16.25	52.8	16.3
	43	34.6	11.6	38.46	13.23	44.92	16.25	46.0	16.2	46.92	16.07	47.51	14.80	47.8	14.2
	45	34.6	12.5	38.46	14.33	40.66	14.57	40.9	14.0	41.14	13.42	41.90	12.48	42.5	12.1
	48	31.1	12.1	31.37	11.59	31.83	10.76	32.4	10.6	32.72	10.29	32.41	9.44	33.6	9.54
	50	25.1	9.78	25.25	9.43	26.25	9.14	25.6	8.60	25.94	8.46	26.03	7.98	27.0	8.05
	52	18.8	7.80	19.12	7.64	20.10	7.51	18.9	6.96	19.68	6.99	21.17	7.08	19.5	6.53

Abbreviations:
CR: Combination ratio
TC: Total capacity (kW)
PI: Power input (compressor + outdoor fan motor) (kW)

Notes:
1.Shaded cells indicate rating condition.

Table continued on next page ...

Table 2-9.6: 18HP cooling capacity (continued)

Combination (%) (Capacity index)	Outdoor temperature (°C DB)	Indoor temperature(°C DB/WB)													
		DB:22,WB:15		DB:23.3,WB:16		DB:25.8,WB:18		DB:27,WB:19		DB:28.2,WB:20		DB:30.7,WB:22		DB:32,WB:24	
		TC	PI	TC	PI	TC	PI	TC	PI	TC	PI	TC	PI	TC	PI
		kW	kW	kW	kW	kW	kW	kW	kW	kW	kW	kW	kW	kW	kW
90%	-5	31.1	3.54	34.62	3.72	41.54	4.71	45.0	5.31	48.46	5.94	55.38	7.26	62.3	8.37
	-2	31.1	3.55	34.62	3.78	41.54	4.77	45.0	5.34	48.46	5.95	55.38	7.27	62.3	8.41
	0	31.1	3.55	34.62	3.80	41.54	4.77	45.0	5.37	48.46	6.05	55.38	7.34	62.3	8.43
	2	31.1	3.55	34.62	3.86	41.54	4.78	45.0	5.45	48.46	6.09	55.38	7.36	62.3	8.49
	4	31.1	3.56	34.62	3.88	41.54	4.83	45.0	5.46	48.46	6.10	55.38	7.38	62.3	8.69
	6	31.1	3.58	34.62	3.91	41.54	4.87	45.0	5.49	48.46	6.31	55.38	7.61	62.3	8.74
	8	31.1	3.62	34.62	3.93	41.54	4.87	45.0	5.66	48.46	6.34	55.38	7.80	62.3	8.97
	10	31.1	3.65	34.62	3.98	41.54	5.05	45.0	5.71	48.46	6.50	55.38	7.91	62.3	9.11
	12	31.1	3.69	34.62	4.06	41.54	5.17	45.0	6.00	48.46	6.72	55.38	8.00	62.3	9.23
	14	31.1	3.79	34.62	4.20	41.54	5.34	45.0	6.22	48.46	6.73	55.38	8.11	62.3	9.25
	16	31.1	3.92	34.62	4.38	41.54	5.72	45.0	6.24	48.46	6.87	55.38	8.18	62.3	9.66
	18	31.1	4.19	34.62	4.70	41.54	5.73	45.0	6.40	48.46	6.89	55.38	8.23	62.3	10.3
	20	31.1	4.69	34.62	5.07	41.54	5.90	45.0	6.45	48.46	7.24	55.38	8.82	62.3	11.1
	21	31.1	4.81	34.62	5.24	41.54	6.12	45.0	6.71	48.46	7.54	55.38	9.12	62.3	11.4
	23	31.1	5.18	34.62	5.61	41.54	6.57	45.0	7.30	48.46	8.13	55.38	9.83	62.3	12.2
	25	31.1	5.53	34.62	6.02	41.54	7.04	45.0	7.87	48.46	8.76	55.38	10.56	62.3	13.1
	27	31.1	5.91	34.62	6.43	41.54	7.61	45.0	8.48	48.46	9.41	55.38	11.32	62.3	14.3
	29	31.1	6.30	34.62	6.85	41.54	8.23	45.0	9.17	48.46	10.13	55.38	12.18	62.3	15.5
	31	31.1	6.70	34.62	7.30	41.54	8.83	45.0	9.88	48.46	10.89	55.38	13.10	60.6	16.2
	33	31.1	7.13	34.62	7.80	41.54	9.54	45.0	10.6	48.46	11.70	55.38	14.05	58.9	16.2
	35	31.1	7.59	34.62	8.30	41.54	10.28	45.0	11.4	48.46	12.61	55.38	15.14	57.4	16.2
	37	31.1	8.10	34.62	8.88	41.54	11.08	45.0	12.3	48.46	13.64	55.38	16.54	55.6	16.2
	39	31.1	8.64	34.62	9.53	41.54	11.97	45.0	13.3	48.46	14.68	52.73	16.22	53.9	16.2
	41	31.1	9.23	34.62	10.29	41.54	12.94	45.0	14.4	48.46	15.93	50.77	16.23	52.2	16.2
	43	31.1	9.90	34.62	11.14	41.54	14.01	45.0	15.6	46.57	16.26	47.58	15.28	47.8	14.6
	45	31.1	10.6	34.62	12.11	41.54	15.18	41.0	14.3	41.31	13.82	42.04	12.88	42.3	12.2
	48	31.1	12.0	31.50	11.84	31.96	10.93	32.1	10.5	32.36	10.26	32.60	9.62	33.3	9.49
	50	25.2	9.87	25.57	9.61	26.60	9.31	25.9	8.79	25.85	8.43	27.14	8.36	26.8	8.02
	52	18.9	7.79	19.67	7.82	19.54	7.31	20.8	7.53	19.72	6.98	21.18	7.06	19.6	6.51
80%	-5	27.6	3.14	30.77	3.39	36.92	4.08	40.0	4.51	43.08	5.09	49.23	6.23	55.3	7.22
	-2	27.6	3.15	30.77	3.42	36.92	4.10	40.0	4.61	43.08	5.11	49.23	6.29	55.3	7.24
	0	27.6	3.21	30.77	3.42	36.92	4.13	40.0	4.62	43.08	5.15	49.23	6.31	55.3	7.30
	2	27.6	3.21	30.77	3.42	36.92	4.14	40.0	4.65	43.08	5.24	49.23	6.37	55.3	7.35
	4	27.6	3.22	30.77	3.47	36.92	4.17	40.0	4.65	43.08	5.26	49.23	6.44	55.3	7.36
	6	27.6	3.22	30.77	3.50	36.92	4.18	40.0	4.73	43.08	5.29	49.23	6.61	55.3	7.59
	8	27.6	3.23	30.77	3.52	36.92	4.22	40.0	4.83	43.08	5.40	49.23	6.73	55.3	7.76
	10	27.6	3.26	30.77	3.57	36.92	4.27	40.0	4.88	43.08	5.50	49.23	6.81	55.3	7.80
	12	27.6	3.31	30.77	3.60	36.92	4.31	40.0	5.04	43.08	5.74	49.23	6.82	55.3	7.89
	14	27.6	3.37	30.77	3.70	36.92	4.59	40.0	5.33	43.08	5.90	49.23	6.82	55.3	8.07
	16	27.6	3.48	30.77	3.87	36.92	4.88	40.0	5.50	43.08	5.91	49.23	6.97	55.3	8.08
	18	27.6	3.66	30.77	4.13	36.92	5.04	40.0	5.51	43.08	5.94	49.23	7.03	55.3	8.22
	20	27.6	4.03	30.77	4.54	36.92	5.24	40.0	5.58	43.08	6.09	49.23	7.13	55.3	8.66
	21	27.6	4.32	30.77	4.65	36.92	5.34	40.0	5.70	43.08	6.10	49.23	7.13	55.3	9.01
	23	27.6	4.60	30.77	4.96	36.92	5.73	40.0	6.13	43.08	6.55	49.23	7.71	55.3	9.68
	25	27.6	4.92	30.77	5.31	36.92	6.13	40.0	6.57	43.08	7.03	49.23	8.35	55.3	10.4
	27	27.6	5.25	30.77	5.67	36.92	6.55	40.0	7.02	43.08	7.56	49.23	9.02	55.3	11.2
	29	27.6	5.59	30.77	6.04	36.92	7.00	40.0	7.52	43.08	8.15	49.23	9.74	55.3	12.0
	31	27.6	5.94	30.77	6.43	36.92	7.47	40.0	8.03	43.08	8.79	49.23	10.49	55.3	12.9
	33	27.6	6.31	30.77	6.84	36.92	7.97	40.0	8.61	43.08	9.51	49.23	11.31	55.3	13.9
	35	27.6	6.71	30.77	7.29	36.92	8.49	40.0	9.32	43.08	10.23	49.23	12.19	55.3	15.0
	37	27.6	7.13	30.77	7.75	36.92	9.07	40.0	10.0	43.08	11.03	49.23	13.12	55.3	16.2
	39	27.6	7.60	30.77	8.26	36.92	9.82	40.0	10.8	43.08	11.96	49.23	14.19	52.9	16.2
	41	27.6	8.08	30.77	8.83	36.92	10.63	40.0	11.7	43.08	12.93	49.23	15.36	51.1	16.2
	43	27.6	8.65	30.77	9.46	36.92	11.53	40.0	12.7	43.08	14.02	47.59	15.81	47.8	15.1
	45	27.6	9.26	30.77	10.16	36.92	12.48	40.0	13.8	41.31	14.27	41.85	13.14	42.2	12.6
	48	27.6	10.3	30.77	11.39	32.06	11.19	32.3	10.8	32.58	10.52	33.18	9.97	33.3	9.64
	50	25.4	10.0	25.55	9.70	25.87	9.10	26.2	8.96	26.13	8.62	26.29	8.14	26.6	7.99
	52	19.3	7.96	19.15	7.62	20.07	7.49	20.2	7.33	19.71	6.97	21.14	7.04	21.9	7.09

Abbreviations:
CR: Combination ratio
TC: Total capacity (kW)
PI: Power input (compressor + outdoor fan motor) (kW)
Notes:
1.Shaded cells indicate rating condition.

Table continued on next page ...

Table 2-9.6: 18HP cooling capacity (continued)

Combination (%) (Capacity index)	Outdoor temperature (°C DB)	Indoor temperature(°C DB/WB)													
		DB:22,WB:15		DB:23.3,WB:16		DB:25.8,WB:18		DB:27,WB:19		DB:28.2,WB:20		DB:30.7,WB:22		DB:32,WB:24	
		TC	PI	TC	PI	TC	PI	TC	PI	TC	PI	TC	PI	TC	PI
		kW	kW	kW	kW	kW	kW	kW	kW	kW	kW	kW	kW	kW	kW
70%	-5	24.23	2.75	26.92	3.00	32.31	3.47	35.00	3.77	37.69	4.31	43.08	5.36	48.46	6.15
	-2	24.23	2.79	26.92	3.04	32.31	3.51	35.00	3.84	37.69	4.33	43.08	5.37	48.46	6.15
	0	24.23	2.79	26.92	3.04	32.31	3.56	35.00	3.87	37.69	4.41	43.08	5.40	48.46	6.22
	2	24.23	2.85	26.92	3.05	32.31	3.60	35.00	3.90	37.69	4.41	43.08	5.42	48.46	6.25
	4	24.23	2.86	26.92	3.10	32.31	3.63	35.00	3.93	37.69	4.45	43.08	5.48	48.46	6.26
	6	24.23	2.86	26.92	3.10	32.31	3.63	35.00	3.94	37.69	4.59	43.08	5.53	48.46	6.34
	8	24.23	2.87	26.92	3.12	32.31	3.63	35.00	4.03	37.69	4.60	43.08	5.59	48.46	6.44
	10	24.23	2.88	26.92	3.14	32.31	3.68	35.00	4.04	37.69	4.65	43.08	5.80	48.46	6.51
	12	24.23	2.93	26.92	3.17	32.31	3.75	35.00	4.09	37.69	4.66	43.08	5.88	48.46	6.65
	14	24.23	2.99	26.92	3.24	32.31	3.88	35.00	4.31	37.69	4.78	43.08	5.89	48.46	6.66
	16	24.23	3.07	26.92	3.37	32.31	4.05	35.00	4.41	37.69	5.14	43.08	5.92	48.46	6.79
	18	24.23	3.16	26.92	3.56	32.31	4.36	35.00	4.77	37.69	5.18	43.08	5.95	48.46	6.83
	20	24.23	3.44	26.92	3.94	32.31	4.62	35.00	4.93	37.69	5.22	43.08	6.07	48.46	6.87
	21	24.23	3.66	26.92	4.12	32.31	4.72	35.00	5.01	37.69	5.32	43.08	6.08	48.46	7.03
	23	24.23	3.99	26.92	4.36	32.31	4.95	35.00	5.27	37.69	5.60	43.08	6.22	48.46	7.41
	25	24.23	4.27	26.92	4.67	32.31	5.31	35.00	5.65	37.69	6.00	43.08	6.68	48.46	8.01
	27	24.23	4.55	26.92	4.98	32.31	5.68	35.00	6.04	37.69	6.42	43.08	7.16	48.46	8.63
	29	24.23	4.85	26.92	5.30	32.31	6.05	35.00	6.45	37.69	6.84	43.08	7.66	48.46	9.32
	31	24.23	5.15	26.92	5.64	32.31	6.45	35.00	6.87	37.69	7.31	43.08	8.17	48.46	10.06
	33	24.23	5.57	26.92	5.98	32.31	6.86	35.00	7.32	37.69	7.79	43.08	8.82	48.46	10.85
	35	24.23	5.91	26.92	6.35	32.31	7.30	35.00	7.79	37.69	8.31	43.08	9.53	48.46	11.68
	37	24.23	6.26	26.92	6.75	32.31	7.77	35.00	8.32	37.69	8.89	43.08	10.34	48.46	12.59
	39	24.23	6.64	26.92	7.18	32.31	8.30	35.00	8.87	37.69	9.50	43.08	11.17	48.46	13.64
	41	24.23	7.05	26.92	7.64	32.31	8.87	35.00	9.51	37.69	10.26	43.08	12.13	48.46	14.73
	43	24.23	7.53	26.92	8.16	32.31	9.50	35.00	10.20	37.69	11.19	43.08	13.12	48.46	16.02
	45	24.23	8.01	26.92	8.72	32.31	10.18	35.00	11.06	37.69	12.14	41.82	13.71	42.06	13.09
	48	24.23	8.87	26.92	9.69	32.31	11.45	32.44	11.11	32.54	10.72	33.01	10.11	33.23	9.78
	50	24.23	9.53	25.78	9.92	26.19	9.37	26.43	9.11	26.33	8.77	26.53	8.30	27.50	8.36
	52	19.28	7.96	19.57	7.79	20.50	7.66	20.66	7.50	20.21	7.15	21.02	7.02	21.77	7.07
60%	-5	20.77	2.42	23.08	2.67	27.69	2.99	30.00	3.18	32.31	3.47	36.92	4.19	41.54	4.90
	-2	20.77	2.49	23.08	2.67	27.69	3.04	30.00	3.21	32.31	3.48	36.92	4.22	41.54	4.99
	0	20.77	2.50	23.08	2.67	27.69	3.05	30.00	3.27	32.31	3.52	36.92	4.26	41.54	5.06
	2	20.77	2.51	23.08	2.68	27.69	3.09	30.00	3.28	32.31	3.52	36.92	4.34	41.54	5.12
	4	20.77	2.52	23.08	2.70	27.69	3.12	30.00	3.29	32.31	3.52	36.92	4.41	41.54	5.14
	6	20.77	2.52	23.08	2.71	27.69	3.12	30.00	3.29	32.31	3.53	36.92	4.54	41.54	5.17
	8	20.77	2.53	23.08	2.71	27.69	3.15	30.00	3.38	32.31	3.60	36.92	4.59	41.54	5.31
	10	20.77	2.55	23.08	2.74	27.69	3.20	30.00	3.43	32.31	3.64	36.92	4.65	41.54	5.38
	12	20.77	2.57	23.08	2.78	27.69	3.27	30.00	3.53	32.31	3.82	36.92	4.80	41.54	5.51
	14	20.77	2.58	23.08	2.79	27.69	3.38	30.00	3.61	32.31	3.86	36.92	4.85	41.54	5.58
	16	20.77	2.62	23.08	2.87	27.69	3.47	30.00	3.82	32.31	4.07	36.92	5.01	41.54	5.68
	18	20.77	2.72	23.08	3.00	27.69	3.76	30.00	4.08	32.31	4.44	36.92	5.04	41.54	5.70
	20	20.77	2.91	23.08	3.23	27.69	4.03	30.00	4.29	32.31	4.55	36.92	5.13	41.54	5.70
	21	20.77	3.13	23.08	3.52	27.69	4.11	30.00	4.39	32.31	4.62	36.92	5.22	41.54	5.89
	23	20.77	3.26	23.08	3.82	27.69	4.31	30.00	4.57	32.31	4.82	36.92	5.30	41.54	5.91
	25	20.77	3.50	23.08	3.90	27.69	4.58	30.00	4.83	32.31	5.10	36.92	5.61	41.54	6.34
	27	20.77	3.74	23.08	4.16	27.69	4.89	30.00	5.16	32.31	5.44	36.92	5.99	41.54	6.79
	29	20.77	4.00	23.08	4.44	27.69	5.20	30.00	5.50	32.31	5.81	36.92	6.39	41.54	7.27
	31	20.77	4.26	23.08	4.72	27.69	5.53	30.00	5.86	32.31	6.17	36.92	6.82	41.54	7.76
	33	20.77	4.60	23.08	5.02	27.69	5.87	30.00	6.23	32.31	6.58	36.92	7.27	41.54	8.27
	35	20.77	4.89	23.08	5.44	27.69	6.24	30.00	6.62	32.31	7.00	36.92	7.76	41.54	8.84
	37	20.77	5.20	23.08	5.75	27.69	6.63	30.00	7.04	32.31	7.45	36.92	8.27	41.54	9.55
	39	20.77	5.51	23.08	6.11	27.69	7.05	30.00	7.48	32.31	7.94	36.92	8.84	41.54	10.36
	41	20.77	5.86	23.08	6.48	27.69	7.50	30.00	7.99	32.31	8.49	36.92	9.46	41.54	11.22
	43	20.77	6.25	23.08	6.89	27.69	8.01	30.00	8.54	32.31	9.08	36.92	10.15	41.54	12.18
	45	20.77	6.66	23.08	7.35	27.69	8.54	30.00	9.14	32.31	9.74	36.92	10.99	41.54	13.28
	48	20.77	7.44	23.08	8.21	27.69	9.49	30.00	10.19	32.31	10.88	33.01	10.43	33.20	10.11
	50	20.77	8.11	23.08	8.80	26.18	9.57	26.32	9.28	26.50	9.03	27.06	8.64	27.48	8.50
	52	19.47	8.12	19.57	7.88	19.76	7.45	19.91	7.29	20.57	7.32	20.13	6.81	20.82	6.85

Abbreviations:
CR: Combination ratio
TC: Total capacity (kW)
PI: Power input (compressor + outdoor fan motor) (kW)

Notes:
Shaded cells indicate rating condition.

Table continued on next page ...

Table 2 9 6: 18HP cooling capacity (continued)

- .

Combination (%) (Capacity index)	Outdoor temperature (°C DB)	Indoor temperature(°C DB/WB)													
		DB:22,WB:15		DB:23.3,WB:16		DB:25.8,WB:18		DB:27,WB:19		DB:28.2,WB:20		DB:30.7,WB:22		DB:32,WB:24	
		TC	PI	TC	PI	TC	PI	TC	PI	TC	PI	TC	PI	TC	PI
		kW	kW	kW	kW	kW	kW	kW	kW	kW	kW	kW	kW	kW	kW
50%	-5	17.31	2.04	19.23	2.20	23.08	2.57	25.00	2.75	26.92	2.93	30.77	3.26	34.62	3.75
	-2	17.31	2.04	19.23	2.25	23.08	2.61	25.00	2.75	26.92	2.97	30.77	3.30	34.62	3.89
	0	17.31	2.12	19.23	2.29	23.08	2.63	25.00	2.78	26.92	2.98	30.77	3.31	34.62	3.96
	2	17.31	2.13	19.23	2.31	23.08	2.65	25.00	2.80	26.92	2.99	30.77	3.32	34.62	3.97
	4	17.31	2.15	19.23	2.32	23.08	2.66	25.00	2.81	26.92	3.00	30.77	3.33	34.62	4.05
	6	17.31	2.16	19.23	2.32	23.08	2.67	25.00	2.81	26.92	3.01	30.77	3.35	34.62	4.08
	8	17.31	2.17	19.23	2.33	23.08	2.67	25.00	2.85	26.92	3.06	30.77	3.37	34.62	4.10
	10	17.31	2.17	19.23	2.34	23.08	2.69	25.00	2.87	26.92	3.09	30.77	3.59	34.62	4.22
	12	17.31	2.17	19.23	2.35	23.08	2.71	25.00	2.94	26.92	3.13	30.77	3.59	34.62	4.38
	14	17.31	2.19	19.23	2.41	23.08	2.81	25.00	3.00	26.92	3.23	30.77	3.62	34.62	4.38
	16	17.31	2.22	19.23	2.45	23.08	2.86	25.00	3.08	26.92	3.35	30.77	3.93	34.62	4.50
	18	17.31	2.27	19.23	2.52	23.08	3.04	25.00	3.29	26.92	3.63	30.77	4.19	34.62	4.67
	20	17.31	2.41	19.23	2.72	23.08	3.38	25.00	3.66	26.92	3.86	30.77	4.28	34.62	4.74
	21	17.31	2.52	19.23	2.89	23.08	3.51	25.00	3.76	26.92	3.94	30.77	4.36	34.62	4.82
	23	17.31	2.68	19.23	3.03	23.08	3.70	25.00	3.91	26.92	4.11	30.77	4.51	34.62	4.99
	25	17.31	2.88	19.23	3.15	23.08	3.74	25.00	4.12	26.92	4.32	30.77	4.71	34.62	5.20
	27	17.31	3.09	19.23	3.36	23.08	4.00	25.00	4.29	26.92	4.59	30.77	4.98	34.62	5.56
	29	17.31	3.30	19.23	3.60	23.08	4.26	25.00	4.57	26.92	4.89	30.77	5.31	34.62	5.93
	31	17.31	3.52	19.23	3.83	23.08	4.53	25.00	4.98	26.92	5.19	30.77	5.66	34.62	6.33
	33	17.31	3.75	19.23	4.08	23.08	4.81	25.00	5.27	26.92	5.52	30.77	6.01	34.62	6.74
	35	17.31	3.98	19.23	4.34	23.08	5.11	25.00	5.58	26.92	5.85	30.77	6.40	34.62	7.16
	37	17.31	4.24	19.23	4.61	23.08	5.42	25.00	5.91	26.92	6.21	30.77	6.81	34.62	7.65
	39	17.31	4.51	19.23	4.90	23.08	5.87	25.00	6.27	26.92	6.59	30.77	7.24	34.62	8.14
	41	17.31	4.80	19.23	5.21	23.08	6.21	25.00	6.65	26.92	7.02	30.77	7.70	34.62	8.70
	43	17.31	5.11	19.23	5.60	23.08	6.60	25.00	7.07	26.92	7.46	30.77	8.22	34.62	9.31
	45	17.31	5.44	19.23	5.98	23.08	7.03	25.00	7.53	26.92	7.97	30.77	8.81	34.62	10.02
	48	17.31	6.02	19.23	6.60	23.08	7.76	25.00	8.31	26.92	8.82	30.77	9.80	33.23	10.62
	50	17.31	6.80	19.23	7.33	23.08	8.38	25.00	8.92	26.92	9.46	26.77	8.80	26.90	8.54
	52	17.31	7.26	19.23	7.84	19.98	7.66	20.06	7.45	20.18	7.29	20.98	7.16	21.09	7.01

Abbreviations:
CR: Combination ratio
TC: Total capacity (kW)
PI: Power input (compressor + outdoor fan motor) (kW)

Notes:
Shaded cells indicate rating condition.

9.2 Heating Capacity Tables

Table 2-9.7: 8HP heating capacity

Combination (%) (Capacity index)	Outdoor air temp.		Indoor air temp. °C DB											
			16		18		20		21		22		24	
			TC	PI	TC	PI	TC	PI	TC	PI	TC	PI	TC	PI
	°C DB	°C WB	kW	kW	kW	kW	kW	kW	kW	kW	kW	kW	kW	kW
130%	-25	-25.4	21.76	8.13	22.00	8.50	22.21	8.87	22.29	9.05	22.37	9.24	22.51	9.61
	-19.8	-20	23.40	8.35	23.54	8.71	23.64	9.08	23.68	9.26	23.71	9.44	23.76	9.81
	-18.8	-19	23.80	8.41	23.92	8.77	24.01	9.13	24.04	9.31	24.06	9.49	24.09	9.86
	-16.7	-17	24.69	8.54	24.77	8.90	24.82	9.26	24.83	9.44	24.84	9.62	24.83	9.99
	-13.7	-15	25.68	8.74	25.72	9.10	25.74	9.47	25.73	9.65	25.72	9.83	25.68	10.20
	-11.8	-13	26.77	8.88	26.77	9.25	26.75	9.61	26.73	9.79	26.70	9.98	26.63	10.35
	-9.8	-11	27.94	9.05	27.91	9.41	27.85	9.78	27.81	9.96	27.77	10.14	27.50	10.15
	-9.5	-10	28.56	9.09	28.51	9.45	28.43	9.82	28.39	10.00	28.33	10.18	27.50	9.75
	-8.5	-9.1	29.13	9.18	29.07	9.54	28.97	9.91	28.92	10.09	28.86	10.27	27.50	9.44
	-7	-7.6	30.12	9.32	30.03	9.68	29.91	10.05	29.85	10.23	30.00	10.34	27.50	8.92
	-5	-5.6	31.50	9.52	31.38	9.89	31.23	10.25	31.25	10.25	30.00	9.57	27.50	8.24
	-3	-3.7	32.88	9.60	32.72	9.96	32.50	10.02	31.25	9.37	30.00	8.73	27.50	7.67
	0	-0.7	35.17	9.73	35.00	9.83	32.50	8.66	31.25	8.09	30.00	7.63	27.50	6.90
	3	2.2	37.50	9.60	35.00	8.52	32.50	7.54	31.25	7.21	30.00	6.88	27.50	6.21
	5	4.1	37.50	8.73	35.00	7.74	32.50	7.06	31.25	6.74	30.00	6.43	27.50	5.79
	7	6	37.50	7.93	35.00	7.19	32.50	6.59	31.25	6.27	30.00	5.88	27.50	5.22
	9	7.9	37.50	7.27	35.00	6.71	32.50	6.05	31.25	5.75	30.00	5.45	27.50	4.85
	11	9.8	37.50	6.79	35.00	6.22	32.50	5.63	31.25	5.33	30.00	5.03	27.50	4.46
	13	11.8	37.50	6.31	35.00	5.76	32.50	5.17	31.25	4.89	30.00	4.61	27.50	4.12
	15	13.7	37.50	5.85	35.00	5.36	32.50	4.80	31.25	4.53	30.00	4.25	27.50	3.83
120%	-25	-25.4	21.09	8.20	21.33	8.57	21.53	8.94	21.61	9.12	21.69	9.31	21.82	9.69
	-19.8	-20	22.72	8.43	22.85	8.79	22.95	9.15	22.98	9.33	23.01	9.52	23.05	9.89
	-18.8	-19	23.12	8.49	23.23	8.85	23.31	9.21	23.34	9.39	23.36	9.57	23.38	9.94
	-16.7	-17	24.00	8.62	24.08	8.98	24.12	9.34	24.13	9.52	24.13	9.71	24.12	10.08
	-13.7	-15	24.99	8.82	25.02	9.19	25.03	9.55	25.02	9.74	25.01	9.92	25.38	10.44
	-11.8	-13	26.07	8.97	26.06	9.34	26.03	9.70	26.01	9.88	25.98	10.07	25.38	9.81
	-9.8	-11	27.23	9.14	27.19	9.51	27.13	9.87	27.09	10.06	27.04	10.24	25.38	9.17
	-9.5	-10	27.85	9.19	27.79	9.55	27.71	9.91	27.66	10.10	27.69	10.11	25.38	8.79
	-8.5	-9.1	28.41	9.28	28.34	9.64	28.25	10.01	28.19	10.19	27.69	9.79	25.38	8.50
	-7	-7.6	29.40	9.43	29.30	9.79	29.18	10.15	28.85	9.88	27.69	9.24	25.38	8.00
	-5	-5.6	30.77	9.63	30.64	9.99	30.00	9.74	28.85	9.11	27.69	8.52	25.38	7.58
	-3	-3.7	32.14	9.71	32.31	10.05	30.00	8.87	28.85	8.31	27.69	7.80	25.38	7.09
	0	-0.7	34.62	9.72	32.31	8.66	30.00	7.65	28.85	7.33	27.69	7.02	25.38	6.37
	3	2.2	34.62	8.38	32.31	7.49	30.00	6.91	28.85	6.62	27.69	6.32	25.38	5.73
	5	4.1	34.62	7.60	32.31	7.00	30.00	6.46	28.85	6.18	27.69	5.90	25.38	5.34
	7	6	34.62	7.05	32.31	6.54	30.00	5.94	28.85	5.64	27.69	5.34	25.38	4.75
	9	7.9	34.62	6.56	32.31	6.01	30.00	5.47	28.85	5.21	27.69	4.95	25.38	4.44
	11	9.8	34.62	6.11	32.31	5.58	30.00	5.06	28.85	4.81	27.69	4.54	25.38	4.12
	13	11.8	34.62	5.71	32.31	5.17	30.00	4.66	28.85	4.41	27.69	4.19	25.38	3.79
	15	13.7	34.62	5.26	32.31	4.75	30.00	4.27	28.85	4.08	27.69	3.88	25.38	3.50
110%	-25	-25.4	20.50	8.29	20.73	8.66	20.92	9.03	21.00	9.21	21.07	9.40	21.20	9.78
	-19.8	-20	22.11	8.52	22.23	8.88	22.32	9.24	22.35	9.43	22.38	9.61	22.41	9.98
	-18.8	-19	22.50	8.58	22.61	8.94	22.68	9.30	22.70	9.48	22.72	9.67	22.74	10.04
	-16.7	-17	23.38	8.71	23.44	9.07	23.48	9.44	23.48	9.62	23.48	9.80	23.27	9.83
	-13.7	-15	24.35	8.93	24.38	9.29	24.38	9.65	24.37	9.84	24.35	10.02	23.27	9.35
	-11.8	-13	25.42	9.08	25.41	9.44	25.38	9.81	25.35	9.99	25.38	10.03	23.27	8.76
	-9.8	-11	26.58	9.26	26.53	9.62	26.46	9.98	26.44	9.96	25.38	9.34	23.27	8.14
	-9.5	-10	27.19	9.30	27.13	9.66	27.50	10.17	26.44	9.55	25.38	8.94	23.27	7.83
	-8.5	-9.1	27.76	9.40	27.68	9.76	27.50	9.83	26.44	9.23	25.38	8.64	23.27	7.66
	-7	-7.6	28.73	9.55	28.63	9.91	27.50	9.25	26.44	8.68	25.38	8.13	23.27	7.36
	-5	-5.6	30.09	9.76	29.62	9.61	27.50	8.51	26.44	7.99	25.38	7.61	23.27	6.95
	-3	-3.7	31.73	9.78	29.62	8.74	27.50	7.74	26.44	7.42	25.38	7.12	23.27	6.50
	0	-0.7	31.73	8.38	29.62	7.50	27.50	6.96	26.44	6.68	25.38	6.40	23.27	5.83
	3	2.2	31.73	7.26	29.62	6.77	27.50	6.28	26.44	6.02	25.38	5.77	23.27	5.24
	5	4.1	31.73	6.79	29.62	6.33	27.50	5.86	26.44	5.61	25.38	5.37	23.27	4.92
	7	6	31.73	6.35	29.62	5.89	27.50	5.31	26.44	5.04	25.38	4.78	23.27	4.34
	9	7.9	31.73	5.83	29.62	5.36	27.50	4.91	26.44	4.67	25.38	4.44	23.27	4.06
	11	9.8	31.73	5.44	29.62	4.96	27.50	4.51	26.44	4.30	25.38	4.14	23.27	3.77
	13	11.8	31.73	5.01	29.62	4.55	27.50	4.15	26.44	3.98	25.38	3.81	23.27	3.47
	15	13.7	31.73	4.60	29.62	4.18	27.50	3.87	26.44	3.67	25.38	3.51	23.27	3.20

Abbreviations:
CR: Combination ratio
TC: Total capacity (kW)
PI: Power input (compressor + outdoor fan motor) (kW)

Notes:
Shaded cells indicate rating condition.

Table 2-9 7: 8HP heating capacity (continued)

.

Combination (%) (Capacity index)	Outdoor air temp.		Indoor air temp. °C DB											
			16		18		20		21		22		24	
			TC	PI	TC	PI	TC	PI	TC	PI	TC	PI	TC	PI
	°C DB	°C WB	kW	kW	kW	kW	kW	kW	kW	kW	kW	kW	kW	kW
100%	-25	-25.4	19.97	8.39	20.19	8.76	20.38	9.13	20.45	9.32	20.52	9.50	20.64	9.88
	-19.8	-20	21.56	8.63	21.67	8.99	21.75	9.35	21.78	9.54	21.80	9.72	21.15	9.39
	-18.8	-19	21.95	8.69	22.04	9.05	22.11	9.41	22.13	9.60	22.14	9.78	21.15	9.17
	-16.7	-17	22.82	8.83	22.87	9.19	22.90	9.55	22.90	9.74	23.08	9.89	21.15	8.71
	-13.7	-15	23.78	9.05	23.80	9.41	23.79	9.78	24.04	9.98	23.08	9.38	21.15	8.24
	-11.8	-13	24.84	9.21	24.82	9.57	25.00	9.90	24.04	9.32	23.08	8.76	21.15	7.74
	-9.8	-11	25.99	9.39	25.93	9.75	25.00	9.20	24.04	8.65	23.08	8.12	21.15	7.38
	-9.5	-10	26.59	9.44	26.92	9.89	25.00	8.79	24.04	8.27	23.08	7.76	21.15	7.16
	-8.5	-9.1	27.15	9.54	26.92	9.54	25.00	8.49	24.04	7.97	23.08	7.58	21.15	6.99
	-7	-7.6	28.12	9.69	26.92	8.96	25.00	7.96	24.04	7.57	23.08	7.28	21.15	6.70
	-5	-5.6	28.85	9.17	26.92	8.21	25.00	7.44	24.04	7.17	23.08	6.90	21.15	6.32
	-3	-3.7	28.85	8.30	26.92	7.47	25.00	6.97	24.04	6.71	23.08	6.44	21.15	5.91
	0	-0.7	28.85	7.17	26.92	6.73	25.00	6.27	24.04	6.03	23.08	5.79	21.15	5.29
	3	2.2	28.85	6.48	26.92	6.07	25.00	5.64	24.04	5.42	23.08	5.19	21.15	4.83
	5	4.1	28.85	6.06	26.92	5.67	25.00	5.26	24.04	5.04	23.08	4.87	21.15	4.47
	7	6	28.85	5.57	26.92	5.16	25.00	4.69	24.04	4.47	23.08	4.28	21.15	3.93
	9	7.9	28.85	5.12	26.92	4.73	25.00	4.34	24.04	4.17	23.08	4.02	21.15	3.69
	11	9.8	28.85	4.74	26.92	4.35	25.00	4.02	24.04	3.86	23.08	3.73	21.15	3.41
	13	11.8	28.85	4.34	26.92	4.00	25.00	3.71	24.04	3.56	23.08	3.42	21.15	3.13
	15	13.7	28.85	4.00	26.92	3.72	25.00	3.41	24.04	3.28	23.08	3.14	21.15	2.88
90%	-25	-25.4	19.52	8.51	19.73	8.89	19.90	9.26	19.98	9.45	20.04	9.64	19.04	9.02
	-19.8	-20	21.08	8.76	21.18	9.13	21.25	9.49	21.63	9.81	20.77	9.25	19.04	8.21
	-18.8	-19	21.47	8.82	21.55	9.19	21.60	9.55	21.63	9.58	20.77	9.02	19.04	8.01
	-16.7	-17	22.32	8.97	22.36	9.33	22.50	9.61	21.63	9.06	20.77	8.53	19.04	7.62
	-13.7	-15	23.28	9.20	23.28	9.56	22.50	9.06	21.63	8.55	20.77	8.05	19.04	7.37
	-11.8	-13	24.32	9.37	24.23	9.45	22.50	8.42	21.63	7.94	20.77	7.55	19.04	7.03
	-9.8	-11	25.96	9.74	24.23	8.72	22.50	7.77	21.63	7.45	20.77	7.20	19.04	6.68
	-9.5	-10	25.96	9.28	24.23	8.32	22.50	7.47	21.63	7.23	20.77	6.98	19.04	6.46
	-8.5	-9.1	25.96	8.92	24.23	8.01	22.50	7.31	21.63	7.07	20.77	6.82	19.04	6.31
	-7	-7.6	25.96	8.34	24.23	7.49	22.50	7.02	21.63	6.78	20.77	6.54	19.04	6.04
	-5	-5.6	25.96	7.59	24.23	7.09	22.50	6.64	21.63	6.41	20.77	6.17	19.04	5.69
	-3	-3.7	25.96	7.05	24.23	6.64	22.50	6.21	21.63	6.00	20.77	5.77	19.04	5.30
	0	-0.7	25.96	6.36	24.23	5.98	22.50	5.58	21.63	5.37	20.77	5.16	19.04	4.84
	3	2.2	25.96	5.73	24.23	5.38	22.50	5.01	21.63	4.86	20.77	4.71	19.04	4.42
	5	4.1	25.96	5.35	24.23	5.01	22.50	4.70	21.63	4.57	20.77	4.36	19.04	3.96
	7	6	25.96	4.81	24.23	4.48	22.50	4.12	21.63	3.98	20.77	3.83	19.04	3.53
	9	7.9	25.96	4.44	24.23	4.12	22.50	3.86	21.63	3.74	20.77	3.59	19.04	3.28
	11	9.8	25.96	4.08	24.23	3.82	22.50	3.57	21.63	3.44	20.77	3.31	19.04	3.03
	13	11.8	25.96	3.77	24.23	3.51	22.50	3.27	21.63	3.15	20.77	3.04	19.04	2.77
	15	13.7	25.96	3.47	24.23	3.24	22.50	3.00	21.63	2.90	20.77	2.78	19.04	2.57
80%	-25	-25.4	19.15	8.67	19.35	9.05	19.51	9.42	19.23	9.18	18.46	8.70	16.92	7.84
	-19.8	-20	20.67	8.93	20.76	9.30	20.00	8.75	19.23	8.28	18.46	7.84	16.92	7.30
	-18.8	-19	21.05	9.00	21.54	9.55	20.00	8.52	19.23	8.06	18.46	7.62	16.92	7.17
	-16.7	-17	21.89	9.15	21.54	8.96	20.00	8.01	19.23	7.58	18.46	7.32	16.92	6.91
	-13.7	-15	23.08	9.37	21.54	8.39	20.00	7.52	19.23	7.29	18.46	7.08	16.92	6.65
	-11.8	-13	23.08	8.62	21.54	7.74	20.00	7.17	19.23	6.96	18.46	6.75	16.92	6.31
	-9.8	-11	23.08	7.89	21.54	7.22	20.00	6.83	19.23	6.62	18.46	6.41	16.92	5.96
	-9.5	-10	23.08	7.50	21.54	7.01	20.00	6.62	19.23	6.42	18.46	6.20	16.92	5.76
	-8.5	-9.1	23.08	7.22	21.54	6.85	20.00	6.46	19.23	6.26	18.46	6.05	16.92	5.61
	-7	-7.6	23.08	6.95	21.54	6.59	20.00	6.20	19.23	6.00	18.46	5.79	16.92	5.37
	-5	-5.6	23.08	6.58	21.54	6.23	20.00	5.85	19.23	5.66	18.46	5.46	16.92	5.10
	-3	-3.7	23.08	6.17	21.54	5.82	20.00	5.47	19.23	5.28	18.46	5.10	16.92	4.82
	0	-0.7	23.08	5.55	21.54	5.23	20.00	4.91	19.23	4.79	18.46	4.66	16.92	4.39
	3	2.2	23.08	5.00	21.54	4.72	20.00	4.49	19.23	4.37	18.46	4.25	16.92	4.01
	5	4.1	23.08	4.66	21.54	4.44	20.00	4.15	19.23	3.96	18.46	3.79	16.92	3.46
	7	6	23.08	4.11	21.54	3.86	20.00	3.61	19.23	3.49	18.46	3.37	16.92	3.13
	9	7.9	23.08	3.83	21.54	3.60	20.00	3.37	19.23	3.25	18.46	3.13	16.92	2.87
	11	9.8	23.08	3.53	21.54	3.32	20.00	3.11	19.23	3.00	18.46	2.87	16.92	2.64
	13	11.8	23.08	3.23	21.54	3.04	20.00	2.85	19.23	2.74	18.46	2.62	16.92	2.41
	15	13.7	23.08	2.97	21.54	2.78	20.00	2.60	19.23	2.51	18.46	2.43	16.92	2.26

Abbreviations:
CR: Combination ratio
TC: Total capacity (kW)
PI: Power input (compressor + outdoor fan motor) (kW)

Notes:
Shaded cells indicate rating condition.

Table 2-9.7: 8HP heating capacity (continued)

Combination (%) (Capacity index)	Outdoor air temp.		Indoor air temp. °C DB											
			16		18		20		21		22		24	
			TC	PI	TC	PI	TC	PI	TC	PI	TC	PI	TC	PI
	°C DB	°C WB	kW	kW	kW	kW	kW	kW	kW	kW	kW	kW	kW	kW
70%	-25	-25.4	18.87	8.88	18.85	8.87	17.50	7.98	16.83	7.60	16.15	7.37	14.81	7.15
	-19.8	-20	20.19	8.77	18.85	7.84	17.50	7.19	16.83	7.06	16.15	6.91	14.81	6.60
	-18.8	-19	20.19	8.46	18.85	7.60	17.50	7.08	16.83	6.94	16.15	6.79	14.81	6.47
	-16.7	-17	20.19	7.86	18.85	7.13	17.50	6.84	16.83	6.69	16.15	6.53	14.81	6.18
	-13.7	-15	20.19	7.30	18.85	6.92	17.50	6.60	16.83	6.44	16.15	6.27	14.81	5.90
	-11.8	-13	20.19	6.90	18.85	6.61	17.50	6.29	16.83	6.12	16.15	5.94	14.81	5.57
	-9.8	-11	20.19	6.59	18.85	6.29	17.50	5.96	16.83	5.79	16.15	5.61	14.81	5.24
	-9.5	-10	20.19	6.39	18.85	6.09	17.50	5.77	16.83	5.60	16.15	5.42	14.81	5.08
	-8.5	-9.1	20.19	6.25	18.85	5.94	17.50	5.62	16.83	5.45	16.15	5.28	14.81	4.97
	-7	-7.6	20.19	6.00	18.85	5.70	17.50	5.38	16.83	5.22	16.15	5.06	14.81	4.80
	-5	-5.6	20.19	5.68	18.85	5.38	17.50	5.07	16.83	4.95	16.15	4.83	14.81	4.58
	-3	-3.7	20.19	5.31	18.85	5.03	17.50	4.78	16.83	4.67	16.15	4.56	14.81	4.33
	0	-0.7	20.19	4.77	18.85	4.57	17.50	4.37	16.83	4.26	16.15	4.16	14.81	3.94
	3	2.2	20.19	4.35	18.85	4.17	17.50	3.98	16.83	3.88	16.15	3.79	14.81	3.59
	5	4.1	20.19	4.09	18.85	3.77	17.50	3.48	16.83	3.33	16.15	3.20	14.81	2.94
	7	6	20.19	3.49	18.85	3.31	17.50	3.12	16.83	3.02	16.15	2.92	14.81	2.72
	9	7.9	20.19	3.26	18.85	3.07	17.50	2.87	16.83	2.77	16.15	2.67	14.81	2.47
	11	9.8	20.19	3.01	18.85	2.82	17.50	2.63	16.83	2.54	16.15	2.45	14.81	2.26
	13	11.8	20.19	2.74	18.85	2.57	17.50	2.39	16.83	2.30	16.15	2.22	14.81	2.04
	15	13.7	20.19	2.48	18.85	2.36	17.50	2.22	16.83	2.14	16.15	2.09	14.81	1.91
60%	-25	-25.4	17.31	7.43	16.15	7.00	15.00	6.86	14.42	6.79	13.85	6.71	12.69	6.53
	-19.8	-20	17.31	6.74	16.15	6.56	15.00	6.36	14.42	6.25	13.85	6.13	12.69	5.88
	-18.8	-19	17.31	6.64	16.15	6.45	15.00	6.24	14.42	6.12	13.85	6.00	12.69	5.73
	-16.7	-17	17.31	6.42	16.15	6.21	15.00	5.97	14.42	5.85	13.85	5.71	12.69	5.42
	-13.7	-15	17.31	6.20	16.15	5.97	15.00	5.72	14.42	5.58	13.85	5.44	12.69	5.14
	-11.8	-13	17.31	5.91	16.15	5.67	15.00	5.40	14.42	5.26	13.85	5.12	12.69	4.86
	-9.8	-11	17.31	5.61	16.15	5.36	15.00	5.09	14.42	4.96	13.85	4.85	12.69	4.62
	-9.5	-10	17.31	5.43	16.15	5.18	15.00	4.92	14.42	4.82	13.85	4.71	12.69	4.49
	-8.5	-9.1	17.31	5.30	16.15	5.05	15.00	4.82	14.42	4.72	13.85	4.62	12.69	4.40
	-7	-7.6	17.31	5.08	16.15	4.84	15.00	4.65	14.42	4.56	13.85	4.46	12.69	4.26
	-5	-5.6	17.31	4.79	16.15	4.62	15.00	4.44	14.42	4.35	13.85	4.26	12.69	4.06
	-3	-3.7	17.31	4.53	16.15	4.37	15.00	4.20	14.42	4.11	13.85	4.02	12.69	3.84
	0	-0.7	17.31	4.14	16.15	3.99	15.00	3.83	14.42	3.74	13.85	3.66	12.69	3.49
	3	2.2	17.31	3.77	16.15	3.62	15.00	3.48	14.42	3.40	13.85	3.32	12.69	3.16
	5	4.1	17.31	3.33	16.15	3.08	15.00	2.86	14.42	2.76	13.85	2.68	12.69	2.51
	7	6	17.31	2.92	16.15	2.77	15.00	2.62	14.42	2.55	13.85	2.47	12.69	2.31
	9	7.9	17.31	2.68	16.15	2.53	15.00	2.37	14.42	2.30	13.85	2.22	12.69	2.06
	11	9.8	17.31	2.45	16.15	2.30	15.00	2.16	14.42	2.09	13.85	2.02	12.69	1.87
	13	11.8	17.31	2.21	16.15	2.08	15.00	1.95	14.42	1.89	13.85	1.82	12.69	1.68
	15	13.7	17.31	2.03	16.15	1.95	15.00	1.81	14.42	1.74	13.85	1.68	12.69	1.54
50%	-25	-25.4	14.42	6.30	13.46	6.22	12.50	6.12	12.02	6.07	11.54	6.01	10.58	5.87
	-19.8	-20	14.42	5.80	13.46	5.66	12.50	5.50	12.02	5.42	11.54	5.32	10.58	5.13
	-18.8	-19	14.42	5.69	13.46	5.54	12.50	5.37	12.02	5.28	11.54	5.18	10.58	4.97
	-16.7	-17	14.42	5.44	13.46	5.27	12.50	5.08	12.02	4.98	11.54	4.88	10.58	4.63
	-13.7	-15	14.42	5.20	13.46	5.02	12.50	4.82	12.02	4.72	11.54	4.62	10.58	4.41
	-11.8	-13	14.42	4.92	13.46	4.73	12.50	4.56	12.02	4.48	11.54	4.39	10.58	4.20
	-9.8	-11	14.42	4.65	13.46	4.50	12.50	4.35	12.02	4.27	11.54	4.19	10.58	4.01
	-9.5	-10	14.42	4.52	13.46	4.38	12.50	4.23	12.02	4.15	11.54	4.07	10.58	3.91
	-8.5	-9.1	14.42	4.43	13.46	4.29	12.50	4.15	12.02	4.07	11.54	4.00	10.58	3.84
	-7	-7.6	14.42	4.28	13.46	4.15	12.50	4.01	12.02	3.94	11.54	3.86	10.58	3.71
	-5	-5.6	14.42	4.09	13.46	3.96	12.50	3.83	12.02	3.76	11.54	3.69	10.58	3.54
	-3	-3.7	14.42	3.87	13.46	3.75	12.50	3.62	12.02	3.55	11.54	3.48	10.58	3.34
	0	-0.7	14.42	3.52	13.46	3.41	12.50	3.29	12.02	3.22	11.54	3.16	10.58	3.03
	3	2.2	14.42	3.20	13.46	3.08	12.50	2.97	12.02	2.92	11.54	2.86	10.58	2.65
	5	4.1	14.42	2.56	13.46	2.45	12.50	2.33	12.02	2.27	11.54	2.21	10.58	2.08
	7	6	14.42	2.35	13.46	2.24	12.50	2.14	12.02	2.08	11.54	2.02	10.58	1.90
	9	7.9	14.42	2.11	13.46	2.00	12.50	1.88	12.02	1.83	11.54	1.77	10.58	1.65
	11	9.8	14.42	1.91	13.46	1.81	12.50	1.70	12.02	1.65	11.54	1.60	10.58	1.49
	13	11.8	14.42	1.70	13.46	1.61	12.50	1.52	12.02	1.48	11.54	1.43	10.58	1.33
	15	13.7	14.42	1.57	13.46	1.48	12.50	1.39	12.02	1.34	11.54	1.29	10.58	1.20

Abbreviations:
CR: Combination ratio
TC: Total capacity (kW)
PI: Power input (compressor + outdoor fan motor) (kW)

Notes:

Shaded cells indicate rating condition.

Table 2-9.8: 10HP heating capacity

Combination (%) (Capacity index)	Outdoor air temp.		Indoor air temp. °C DB											
			16		18		20		21		22		24	
			TC	PI	TC	PI	TC	PI	TC	PI	TC	PI	TC	PI
	°C DB	°C WB	kW	kW	kW	kW	kW	kW	kW	kW	kW	kW	kW	kW
130%	-25	-25.4	21.93	8.69	22.56	9.12	23.09	9.55	23.32	9.76	23.54	9.97	23.92	10.39
	-19.8	-20	24.01	9.00	24.42	9.42	24.76	9.83	24.90	10.03	25.03	10.23	25.24	10.64
	-18.8	-19	24.49	9.07	24.87	9.49	25.17	9.89	25.30	10.10	25.41	10.30	25.59	10.71
	-16.7	-17	25.54	9.24	25.85	9.65	26.09	10.05	26.18	10.25	26.26	10.45	26.39	10.86
	-13.7	-15	26.69	9.47	26.93	9.88	27.11	10.29	27.17	10.49	27.23	10.69	27.30	11.10
	-11.8	-13	27.93	9.65	28.11	10.06	28.22	10.46	28.26	10.66	28.29	10.86	28.31	11.27
	-9.8	-11	29.25	9.84	29.37	10.25	29.43	10.65	29.44	10.85	29.44	11.05	29.41	11.46
	-9.5	-10	29.94	9.89	30.03	10.30	30.06	10.70	30.06	10.90	30.05	11.10	30.00	11.50
	-8.5	-9.1	30.58	10.00	30.64	10.40	30.65	10.80	30.63	11.00	30.61	11.20	30.54	11.60
	-7	-7.6	31.67	10.16	31.69	10.56	31.66	10.96	31.63	11.16	31.59	11.36	31.48	11.77
	-5	-5.6	33.19	10.38	33.15	10.79	33.07	11.19	33.02	11.39	32.95	11.59	32.80	12.00
	-3	-3.7	34.69	10.47	34.60	10.87	34.47	11.27	34.40	11.46	34.32	11.66	34.65	12.19
	0	-0.7	37.16	10.63	37.00	11.02	36.81	11.41	36.70	11.61	36.58	11.80	34.65	10.74
	3	2.2	39.32	10.59	39.10	10.96	38.84	11.34	39.38	11.69	37.80	10.93	34.65	9.43
	5	4.1	39.61	9.84	39.32	10.18	39.02	10.53	39.38	10.75	37.80	10.04	34.65	8.63
	7	6	40.90	9.74	40.59	10.07	40.95	10.56	39.38	9.86	37.80	9.20	34.65	7.95
	9	7.9	42.59	9.85	42.25	10.19	40.95	9.68	39.38	9.03	37.80	8.42	34.65	7.36
	11	9.8	44.33	9.97	44.10	10.09	40.95	8.87	39.38	8.28	37.80	7.76	34.65	6.86
	13	11.8	46.19	10.11	44.10	9.21	40.95	8.07	39.38	7.62	37.80	7.23	34.65	6.41
	15	13.7	47.25	9.53	44.10	8.43	40.95	7.50	39.38	7.12	37.80	6.74	34.65	5.93
120%	-25	-25.4	21.35	8.78	21.96	9.21	22.48	9.63	22.71	9.84	22.92	10.06	23.29	10.48
	-19.8	-20	23.40	9.09	23.80	9.51	24.12	9.92	24.25	10.12	24.37	10.33	24.57	10.74
	-18.8	-19	23.87	9.17	24.24	9.58	24.53	9.99	24.65	10.19	24.75	10.39	24.92	10.80
	-16.7	-17	24.91	9.33	25.20	9.74	25.43	10.15	25.52	10.35	25.59	10.55	25.71	10.96
	-13.7	-15	26.05	9.58	26.27	9.98	26.44	10.39	26.50	10.59	26.55	10.80	26.61	11.20
	-11.8	-13	27.28	9.75	27.44	10.16	27.54	10.57	27.57	10.77	27.60	10.97	27.61	11.38
	-9.8	-11	28.59	9.95	28.69	10.36	28.74	10.76	28.74	10.96	28.74	11.16	28.70	11.57
	-9.5	-10	29.27	10.01	29.34	10.41	29.36	10.81	29.36	11.01	29.34	11.21	29.28	11.62
	-8.5	-9.1	29.90	10.11	29.95	10.51	29.94	10.91	29.93	11.11	29.90	11.32	29.82	11.72
	-7	-7.6	30.99	10.28	30.99	10.68	30.95	11.08	30.91	11.28	30.87	11.48	30.75	11.89
	-5	-5.6	32.49	10.51	32.44	10.91	32.35	11.31	32.29	11.52	32.22	11.72	31.98	11.82
	-3	-3.7	33.97	10.61	33.87	11.00	33.74	11.40	33.66	11.60	33.57	11.80	31.98	10.92
	0	-0.7	36.42	10.77	36.25	11.16	36.05	11.55	36.35	11.76	34.89	11.03	31.98	9.57
	3	2.2	38.56	10.73	38.33	11.11	37.80	11.04	36.35	10.35	34.89	9.67	31.98	8.35
	5	4.1	38.82	9.97	38.53	10.32	37.80	10.13	36.35	9.49	34.89	8.86	31.98	7.76
	7	6	40.10	9.87	39.78	10.21	37.80	9.28	36.35	8.68	34.89	8.10	31.98	7.24
	9	7.9	41.78	9.99	40.71	9.61	37.80	8.49	36.35	7.94	34.89	7.49	31.98	6.68
	11	9.8	43.62	9.90	40.71	8.80	37.80	7.78	36.35	7.38	34.89	6.99	31.98	6.21
	13	11.8	43.62	9.02	40.71	8.02	37.80	7.25	36.35	6.90	34.89	6.48	31.98	5.74
	15	13.7	43.62	8.25	40.71	7.43	37.80	6.75	36.35	6.43	34.89	6.06	31.98	5.36
110%	-25	-25.4	20.84	8.88	21.44	9.31	21.94	9.74	22.16	9.95	22.37	10.16	22.72	10.59
	-19.8	-20	22.86	9.20	23.24	9.62	23.55	10.03	23.67	10.23	23.79	10.44	23.98	10.85
	-18.8	-19	23.33	9.28	23.67	9.69	23.95	10.10	24.06	10.30	24.16	10.51	24.32	10.92
	-16.7	-17	24.35	9.45	24.63	9.86	24.84	10.26	24.92	10.47	24.99	10.67	25.09	11.08
	-13.7	-15	25.48	9.70	25.69	10.11	25.83	10.51	25.89	10.71	25.93	10.92	25.98	11.33
	-11.8	-13	26.69	9.88	26.84	10.29	26.92	10.69	26.95	10.89	26.96	11.10	26.97	11.51
	-9.8	-11	27.99	10.09	28.07	10.49	28.10	10.89	28.10	11.10	28.09	11.30	28.05	11.71
	-9.5	-10	28.66	10.15	28.72	10.55	28.72	10.95	28.71	11.15	28.69	11.35	28.62	11.75
	-8.5	-9.1	29.29	10.25	29.32	10.65	29.30	11.05	29.28	11.25	29.24	11.46	29.32	11.78
	-7	-7.6	30.36	10.42	30.35	10.83	30.29	11.22	30.25	11.43	30.20	11.63	29.32	11.22
	-5	-5.6	31.85	10.67	31.78	11.07	31.68	11.47	31.61	11.67	31.98	11.96	29.32	10.49
	-3	-3.7	33.31	10.77	33.20	11.16	33.05	11.56	33.32	11.76	31.98	11.05	29.32	9.66
	0	-0.7	35.74	10.94	35.55	11.33	34.65	10.96	33.32	10.32	31.98	9.67	29.32	8.41
	3	2.2	37.85	10.91	37.32	10.81	34.65	9.62	33.32	9.02	31.98	8.44	29.32	7.53
	5	4.1	38.08	10.13	37.32	9.92	34.65	8.79	33.32	8.24	31.98	7.78	29.32	7.04
	7	6	39.98	10.14	37.32	9.06	34.65	8.03	33.32	7.63	31.98	7.23	29.32	6.46
	9	7.9	39.98	9.28	37.32	8.28	34.65	7.40	33.32	7.05	31.98	6.69	29.32	5.99
	11	9.8	39.98	8.49	37.32	7.61	34.65	6.94	33.32	6.61	31.98	6.23	29.32	5.56
	13	11.8	39.98	7.71	37.32	7.08	34.65	6.44	33.32	6.11	31.98	5.79	29.32	5.11
	15	13.7	39.98	7.17	37.32	6.60	34.65	5.98	33.32	5.67	31.98	5.34	29.32	4.71

Abbreviations:
CR: Combination ratio
TC: Total capacity (kW)
PI: Power input (compressor + outdoor fan motor) (kW)

Notes:
Shaded cells indicate rating condition.

Table 2-9.8: 10HP heating capacity (continued)

Combination (%) (Capacity index)	Outdoor air temp.		Indoor air temp. °C DB											
			16		18		20		21		22		24	
			TC	PI	TC	PI	TC	PI	TC	PI	TC	PI	TC	PI
	°C DB	°C WB	kW	kW	kW	kW	kW	kW	kW	kW	kW	kW	kW	kW
100%	-25	-25.4	20.43	9.00	21.00	9.43	21.49	9.86	21.70	10.08	21.90	10.29	22.24	10.73
	-19.8	-20	22.40	9.33	22.76	9.75	23.05	10.16	23.17	10.37	23.27	10.57	23.45	10.99
	-18.8	-19	22.86	9.41	23.19	9.82	23.44	10.23	23.55	10.44	23.64	10.64	23.78	11.06
	-16.7	-17	23.87	9.59	24.13	10.00	24.32	10.40	24.39	10.61	24.45	10.81	24.54	11.22
	-13.7	-15	24.98	9.84	25.17	10.25	25.30	10.66	25.34	10.86	25.37	11.07	25.41	11.48
	-11.8	-13	26.18	10.03	26.30	10.44	26.37	10.84	26.39	11.05	26.40	11.25	26.65	11.69
	-9.8	-11	27.45	10.25	27.52	10.65	27.53	11.05	27.53	11.26	27.51	11.46	26.65	11.06
	-9.5	-10	28.12	10.31	28.16	10.71	28.15	11.11	28.13	11.31	28.10	11.51	26.65	10.66
	-8.5	-9.1	28.74	10.42	28.75	10.82	28.71	11.22	28.68	11.42	29.08	11.74	26.65	10.36
	-7	-7.6	29.80	10.60	29.76	11.00	29.69	11.40	29.64	11.60	29.08	11.18	26.65	9.84
	-5	-5.6	31.26	10.85	31.18	11.25	31.50	11.74	30.29	11.08	29.08	10.42	26.65	9.14
	-3	-3.7	32.71	10.96	32.58	11.35	31.50	10.81	30.29	10.20	29.08	9.58	26.65	8.38
	0	-0.7	35.10	11.14	33.92	10.58	31.50	9.44	30.29	8.89	29.08	8.34	26.65	7.49
	3	2.2	36.35	10.29	33.92	9.24	31.50	8.23	30.29	7.77	29.08	7.44	26.65	6.77
	5	4.1	36.35	9.41	33.92	8.45	31.50	7.59	30.29	7.27	29.08	6.96	26.65	6.32
	7	6	36.35	8.59	33.92	7.70	31.50	7.12	30.29	6.72	29.08	6.39	26.65	5.72
	9	7.9	36.35	7.84	33.92	7.14	31.50	6.53	30.29	6.22	29.08	5.92	26.65	5.35
	11	9.8	36.35	7.26	33.92	6.68	31.50	6.08	30.29	5.79	29.08	5.51	26.65	4.91
	13	11.8	36.35	6.75	33.92	6.21	31.50	5.63	30.29	5.34	29.08	5.05	26.65	4.50
	15	13.7	36.35	6.29	33.92	5.76	31.50	5.20	30.29	4.92	29.08	4.64	26.65	4.18
90%	-25	-25.4	20.11	9.15	20.66	9.59	21.13	10.02	21.33	10.24	21.51	10.46	21.84	10.89
	-19.8	-20	22.02	9.49	22.36	9.91	22.63	10.32	22.74	10.53	22.83	10.74	22.99	11.16
	-18.8	-19	22.48	9.57	22.78	9.99	23.01	10.40	23.11	10.61	23.19	10.81	23.32	11.23
	-16.7	-17	23.47	9.76	23.70	10.17	23.86	10.57	23.93	10.78	23.98	10.98	23.99	11.20
	-13.7	-15	24.55	10.02	24.72	10.43	24.82	10.84	24.86	11.04	24.89	11.25	23.99	10.78
	-11.8	-13	25.73	10.22	25.83	10.63	25.88	11.03	25.89	11.24	26.17	11.48	23.99	10.21
	-9.8	-11	26.99	10.44	27.03	10.85	27.02	11.25	27.26	11.46	26.17	10.82	23.99	9.58
	-9.5	-10	27.64	10.51	27.66	10.91	27.63	11.31	27.26	11.04	26.17	10.43	23.99	9.23
	-8.5	-9.1	28.25	10.62	28.24	11.02	28.35	11.34	27.26	10.73	26.17	10.12	23.99	8.95
	-7	-7.6	29.29	10.81	29.24	11.21	28.35	10.77	27.26	10.18	26.17	9.60	23.99	8.46
	-5	-5.6	30.73	11.07	30.53	11.16	28.35	10.01	27.26	9.45	26.17	8.91	23.99	7.92
	-3	-3.7	32.71	11.35	30.53	10.25	28.35	9.18	27.26	8.66	26.17	8.14	23.99	7.42
	0	-0.7	32.71	9.88	30.53	8.91	28.35	7.96	27.26	7.61	26.17	7.30	23.99	6.67
	3	2.2	32.71	8.59	30.53	7.73	28.35	7.15	27.26	6.87	26.17	6.58	23.99	6.02
	5	4.1	32.71	7.83	30.53	7.21	28.35	6.68	27.26	6.42	26.17	6.15	23.99	5.62
	7	6	32.71	7.23	30.53	6.70	28.35	6.12	27.26	5.83	26.17	5.56	23.99	4.99
	9	7.9	32.71	6.70	30.53	6.17	28.35	5.66	27.26	5.41	26.17	5.15	23.99	4.67
	11	9.8	32.71	6.25	30.53	5.74	28.35	5.29	27.26	5.02	26.17	4.75	23.99	4.31
	13	11.8	32.71	5.78	30.53	5.34	28.35	4.83	27.26	4.59	26.17	4.39	23.99	3.99
	15	13.7	32.71	5.38	30.53	4.90	28.35	4.43	27.26	4.23	26.17	4.06	23.99	3.69
80%	-25	-25.4	19.91	9.35	20.43	9.79	20.86	10.23	21.05	10.45	21.22	10.67	21.32	10.90
	-19.8	-20	21.74	9.70	22.05	10.12	22.29	10.53	22.39	10.74	22.47	10.95	21.32	10.28
	-18.8	-19	22.18	9.78	22.45	10.20	22.66	10.61	22.74	10.82	23.26	11.25	21.32	10.10
	-16.7	-17	23.15	9.97	23.34	10.38	23.49	10.79	23.54	11.00	23.26	10.81	21.32	9.67
	-13.7	-15	24.21	10.25	24.34	10.66	24.42	11.07	24.23	10.93	23.26	10.36	21.32	9.25
	-11.8	-13	25.35	10.46	25.43	10.86	25.20	10.89	24.23	10.32	23.26	9.77	21.32	8.70
	-9.8	-11	26.58	10.69	27.14	11.32	25.20	10.21	24.23	9.67	23.26	9.15	21.32	8.11
	-9.5	-10	27.22	10.76	27.14	10.89	25.20	9.82	24.23	9.30	23.26	8.78	21.32	7.85
	-8.5	-9.1	27.82	10.88	27.14	10.56	25.20	9.52	24.23	9.01	23.26	8.50	21.32	7.67
	-7	-7.6	29.08	11.04	27.14	10.00	25.20	9.00	24.23	8.51	23.26	8.03	21.32	7.38
	-5	-5.6	29.08	10.21	27.14	9.25	25.20	8.31	24.23	7.87	23.26	7.58	21.32	6.98
	-3	-3.7	29.08	9.34	27.14	8.45	25.20	7.65	24.23	7.37	23.26	7.10	21.32	6.53
	0	-0.7	29.08	8.07	27.14	7.40	25.20	6.90	24.23	6.64	23.26	6.38	21.32	5.87
	3	2.2	29.08	7.13	27.14	6.68	25.20	6.22	24.23	5.99	23.26	5.76	21.32	5.28
	5	4.1	29.08	6.67	27.14	6.25	25.20	5.80	24.23	5.59	23.26	5.36	21.32	4.99
	7	6	29.08	6.15	27.14	5.70	25.20	5.21	24.23	4.98	23.26	4.75	21.32	4.33
	9	7.9	29.08	5.67	27.14	5.28	25.20	4.83	24.23	4.64	23.26	4.42	21.32	4.10
	11	9.8	29.08	5.26	27.14	4.85	25.20	4.44	24.23	4.26	23.26	4.10	21.32	3.78
	13	11.8	29.08	4.85	27.14	4.44	25.20	4.10	24.23	3.95	23.26	3.79	21.32	3.49
	15	13.7	29.08	4.44	27.14	4.12	25.20	3.81	24.23	3.65	23.26	3.52	21.32	3.22

Abbreviations:
CR: Combination ratio
TC: Total capacity (kW)
PI: Power input (compressor + outdoor fan motor) (kW)

Notes:
Shaded cells indicate rating condition.

Table 2-9.8: 10HP heating capacity (continued)

Combination (%) (Capacity index)	Outdoor air temp.		Indoor air temp. °C DB											
			16		18		20		21		22		24	
			TC	PI	TC	PI	TC	PI	TC	PI	TC	PI	TC	PI
	°C DB	°C WB	kW	kW	kW	kW	kW	kW	kW	kW	kW	kW	kW	kW
70%	-25	-25.4	19.83	9.60	20.31	10.05	20.71	10.50	21.20	10.87	20.35	10.37	18.66	9.45
	-19.8	-20	21.56	9.97	21.83	10.39	22.05	10.69	21.20	10.18	20.35	9.68	18.66	8.75
	-18.8	-19	21.98	10.05	22.22	10.47	22.05	10.48	21.20	9.97	20.35	9.49	18.66	8.55
	-16.7	-17	22.91	10.25	23.08	10.67	22.05	10.02	21.20	9.52	20.35	9.05	18.66	8.13
	-13.7	-15	23.94	10.54	23.75	10.53	22.05	9.54	21.20	9.07	20.35	8.61	18.66	7.76
	-11.8	-13	25.44	10.89	23.75	9.89	22.05	8.95	21.20	8.50	20.35	8.05	18.66	7.42
	-9.8	-11	25.44	10.15	23.75	9.22	22.05	8.34	21.20	7.91	20.35	7.59	18.66	7.06
	-9.5	-10	25.44	9.73	23.75	8.83	22.05	7.99	21.20	7.63	20.35	7.37	18.66	6.85
	-8.5	-9.1	25.44	9.41	23.75	8.54	22.05	7.72	21.20	7.46	20.35	7.21	18.66	6.68
	-7	-7.6	25.44	8.86	23.75	8.05	22.05	7.41	21.20	7.17	20.35	6.92	18.66	6.40
	-5	-5.6	25.44	8.15	23.75	7.48	22.05	7.02	21.20	6.78	20.35	6.54	18.66	6.04
	-3	-3.7	25.44	7.44	23.75	7.01	22.05	6.57	21.20	6.34	20.35	6.12	18.66	5.65
	0	-0.7	25.44	6.71	23.75	6.31	22.05	5.91	21.20	5.70	20.35	5.49	18.66	5.12
	3	2.2	25.44	6.06	23.75	5.70	22.05	5.32	21.20	5.13	20.35	4.98	18.66	4.68
	5	4.1	25.44	5.65	23.75	5.31	22.05	4.97	21.20	4.83	20.35	4.62	18.66	4.15
	7	6	25.44	5.11	23.75	4.71	22.05	4.34	21.20	4.19	20.35	4.05	18.66	3.74
	9	7.9	25.44	4.69	23.75	4.37	22.05	4.08	21.20	3.93	20.35	3.80	18.66	3.49
	11	9.8	25.44	4.32	23.75	4.03	22.05	3.77	21.20	3.65	20.35	3.53	18.66	3.23
	13	11.8	25.44	3.97	23.75	3.72	22.05	3.48	21.20	3.36	20.35	3.25	18.66	2.98
	15	13.7	25.44	3.70	23.75	3.43	22.05	3.21	21.20	3.09	20.35	2.97	18.66	2.75
60%	-25	-25.4	19.91	9.96	20.35	10.33	18.90	9.45	18.17	9.05	17.45	8.67	15.99	7.96
	-19.8	-20	21.81	10.44	20.35	9.50	18.90	8.67	18.17	8.28	17.45	7.90	15.99	7.39
	-18.8	-19	21.81	10.20	20.35	9.29	18.90	8.47	18.17	8.08	17.45	7.71	15.99	7.27
	-16.7	-17	21.81	9.65	20.35	8.80	18.90	8.02	18.17	7.65	17.45	7.41	15.99	7.00
	-13.7	-15	21.81	9.12	20.35	8.32	18.90	7.57	18.17	7.37	17.45	7.16	15.99	6.74
	-11.8	-13	21.81	8.48	20.35	7.75	18.90	7.24	18.17	7.04	17.45	6.83	15.99	6.40
	-9.8	-11	21.81	7.86	20.35	7.29	18.90	6.89	18.17	6.69	17.45	6.48	15.99	6.05
	-9.5	-10	21.81	7.51	20.35	7.07	18.90	6.68	18.17	6.48	17.45	6.28	15.99	5.85
	-8.5	-9.1	21.81	7.28	20.35	6.91	18.90	6.52	18.17	6.33	17.45	6.12	15.99	5.70
	-7	-7.6	21.81	7.01	20.35	6.64	18.90	6.26	18.17	6.06	17.45	5.86	15.99	5.45
	-5	-5.6	21.81	6.63	20.35	6.28	18.90	5.91	18.17	5.72	17.45	5.53	15.99	5.18
	-3	-3.7	21.81	6.21	20.35	5.88	18.90	5.52	18.17	5.34	17.45	5.17	15.99	4.90
	0	-0.7	21.81	5.59	20.35	5.27	18.90	4.98	18.17	4.86	17.45	4.73	15.99	4.48
	3	2.2	21.81	5.03	20.35	4.78	18.90	4.56	18.17	4.44	17.45	4.33	15.99	4.09
	5	4.1	21.81	4.71	20.35	4.50	18.90	4.15	18.17	3.92	17.45	3.76	15.99	3.44
	7	6	21.81	4.08	20.35	3.86	18.90	3.63	18.17	3.51	17.45	3.40	15.99	3.16
	9	7.9	21.81	3.82	20.35	3.63	18.90	3.39	18.17	3.27	17.45	3.16	15.99	2.91
	11	9.8	21.81	3.53	20.35	3.33	18.90	3.14	18.17	3.02	17.45	2.91	15.99	2.68
	13	11.8	21.81	3.26	20.35	3.06	18.90	2.88	18.17	2.77	17.45	2.66	15.99	2.45
	15	13.7	21.81	2.99	20.35	2.82	18.90	2.64	18.17	2.56	17.45	2.48	15.99	2.32
50%	-25	-25.4	18.17	8.74	16.96	8.05	15.75	7.45	15.14	7.32	14.54	7.22	13.33	7.01
	-19.8	-20	18.17	7.83	16.96	7.23	15.75	6.98	15.14	6.85	14.54	6.71	13.33	6.41
	-18.8	-19	18.17	7.61	16.96	7.12	15.75	6.87	15.14	6.72	14.54	6.58	13.33	6.27
	-16.7	-17	18.17	7.15	16.96	6.89	15.75	6.60	15.14	6.45	14.54	6.30	13.33	5.98
	-13.7	-15	18.17	6.93	16.96	6.65	15.75	6.35	15.14	6.20	14.54	6.04	13.33	5.69
	-11.8	-13	18.17	6.62	16.96	6.33	15.75	6.03	15.14	5.87	14.54	5.70	13.33	5.36
	-9.8	-11	18.17	6.30	16.96	6.01	15.75	5.70	15.14	5.54	14.54	5.37	13.33	5.08
	-9.5	-10	18.17	6.10	16.96	5.82	15.75	5.51	15.14	5.35	14.54	5.19	13.33	4.93
	-8.5	-9.1	18.17	5.96	16.96	5.67	15.75	5.37	15.14	5.21	14.54	5.08	13.33	4.84
	-7	-7.6	18.17	5.71	16.96	5.43	15.75	5.13	15.14	5.02	14.54	4.90	13.33	4.67
	-5	-5.6	18.17	5.39	16.96	5.11	15.75	4.90	15.14	4.79	14.54	4.68	13.33	4.46
	-3	-3.7	18.17	5.03	16.96	4.82	15.75	4.63	15.14	4.53	14.54	4.43	13.33	4.22
	0	-0.7	18.17	4.59	16.96	4.41	15.75	4.23	15.14	4.14	14.54	4.05	13.33	3.85
	3	2.2	18.17	4.19	16.96	4.03	15.75	3.86	15.14	3.78	14.54	3.69	13.33	3.51
	5	4.1	18.17	3.73	16.96	3.46	15.75	3.26	15.14	3.11	14.54	2.99	13.33	2.81
	7	6	18.17	3.28	16.96	3.12	15.75	2.94	15.14	2.86	14.54	2.77	13.33	2.59
	9	7.9	18.17	3.05	16.96	2.88	15.75	2.70	15.14	2.62	14.54	2.52	13.33	2.35
	11	9.8	18.17	2.81	16.96	2.64	15.75	2.48	15.14	2.40	14.54	2.31	13.33	2.14
	13	11.8	18.17	2.56	16.96	2.41	15.75	2.26	15.14	2.18	14.54	2.10	13.33	1.95
	15	13.7	18.17	2.36	16.96	2.23	15.75	2.13	15.14	2.05	14.54	1.97	13.33	1.82

Abbreviations:
CR: Combination ratio
TC: Total capacity (kW)
PI: Power input (compressor + outdoor fan motor) (kW)

Notes:
Shaded cells indicate rating condition.

Table 2-9.9: 12HP heating capacity

Combination (%) (Capacity index)	Outdoor air temp.		Indoor air temp. °C DB											
			16		18		20		21		22		24	
			TC	PI	TC	PI	TC	PI	TC	PI	TC	PI	TC	PI
	°C DB	°C WB	kW	kW	kW	kW	kW	kW	kW	kW	kW	kW	kW	kW
130%	-25	-25.4	22.75	9.48	23.75	9.98	24.62	10.47	25.00	10.72	25.36	10.96	25.99	11.45
	-19.8	-20	25.29	9.84	25.99	10.33	26.59	10.81	26.84	11.04	27.07	11.28	27.47	11.74
	-18.8	-19	25.85	9.92	26.51	10.41	27.05	10.88	27.29	11.12	27.50	11.35	27.86	11.81
	-16.7	-17	27.06	10.10	27.62	10.58	28.08	11.05	28.27	11.29	28.44	11.52	28.73	11.98
	-13.7	-15	28.36	10.36	28.83	10.84	29.21	11.31	29.36	11.54	29.50	11.78	29.71	12.24
	-11.8	-13	29.75	10.54	30.14	11.02	30.44	11.49	30.55	11.72	30.65	11.95	30.80	12.41
	-9.8	-11	31.22	10.74	31.53	11.22	31.75	11.69	31.83	11.92	31.90	12.15	31.98	12.61
	-9.5	-10	31.98	10.79	32.25	11.27	32.44	11.73	32.51	11.96	32.55	12.19	32.60	12.65
	-8.5	-9.1	32.68	10.90	32.92	11.37	33.08	11.84	33.13	12.07	33.16	12.29	33.18	12.75
	-7	-7.6	33.88	11.06	34.07	11.54	34.17	12.00	34.20	12.23	34.21	12.46	34.19	12.92
	-5	-5.6	35.54	11.29	35.65	11.76	35.69	12.23	35.69	12.46	35.67	12.69	35.60	13.14
	-3	-3.7	37.17	11.37	37.22	11.84	37.20	12.29	37.17	12.52	37.13	12.75	37.00	13.20
	0	-0.7	39.84	11.51	39.80	11.96	39.69	12.41	39.62	12.64	39.54	12.86	39.34	13.31
	3	2.2	42.22	11.45	42.09	11.89	41.90	12.32	41.79	12.54	41.67	12.75	41.25	12.77
	5	4.1	42.72	10.72	42.51	11.12	42.25	11.52	42.11	11.72	41.97	11.92	41.25	11.75
	7	6	44.16	10.60	43.89	10.99	43.60	11.39	43.44	11.58	43.28	11.78	41.25	10.79
	9	7.9	45.96	10.70	45.66	11.09	45.33	11.48	45.16	11.68	45.00	11.57	41.25	9.91
	11	9.8	47.81	10.81	47.47	11.19	47.11	11.58	46.88	11.42	45.00	10.62	41.25	9.08
	13	11.8	49.79	10.92	49.42	11.31	48.75	11.20	46.88	10.44	45.00	9.69	41.25	8.29
	15	13.7	51.71	11.04	51.31	11.42	48.75	10.29	46.88	9.58	45.00	8.90	41.25	7.74
120%	-25	-25.4	21.97	9.55	22.96	10.05	23.81	10.55	24.19	10.79	24.54	11.04	25.17	11.53
	-19.8	-20	24.48	9.92	25.18	10.41	25.75	10.89	26.00	11.12	26.23	11.36	26.61	11.83
	-18.8	-19	25.04	10.00	25.69	10.49	26.22	10.97	26.44	11.20	26.65	11.43	26.99	11.90
	-16.7	-17	26.24	10.19	26.79	10.67	27.23	11.14	27.42	11.37	27.58	11.60	27.85	12.06
	-13.7	-15	27.53	10.45	27.99	10.93	28.35	11.40	28.50	11.63	28.63	11.87	28.83	12.33
	-11.8	-13	28.91	10.64	29.29	11.12	29.57	11.58	29.68	11.82	29.77	12.05	29.90	12.51
	-9.8	-11	30.37	10.84	30.67	11.32	30.87	11.79	30.95	12.02	31.01	12.25	31.07	12.71
	-9.5	-10	31.13	10.90	31.39	11.37	31.56	11.83	31.62	12.06	31.66	12.29	31.69	12.75
	-8.5	-9.1	31.83	11.00	32.05	11.48	32.19	11.94	32.23	12.17	32.26	12.40	32.27	12.85
	-7	-7.6	33.02	11.17	33.19	11.64	33.28	12.11	33.30	12.34	33.30	12.56	33.27	13.02
	-5	-5.6	34.66	11.41	34.76	11.88	34.79	12.34	34.78	12.57	34.75	12.80	34.66	13.26
	-3	-3.7	36.28	11.49	36.31	11.95	36.28	12.41	36.24	12.64	36.19	12.86	36.06	13.32
	0	-0.7	38.93	11.64	38.87	12.09	38.75	12.54	38.68	12.76	38.59	12.98	38.08	12.91
	3	2.2	41.29	11.58	41.14	12.02	40.94	12.45	40.83	12.67	41.54	13.15	38.08	11.38
	5	4.1	41.76	10.84	41.54	11.24	41.28	11.64	41.13	11.84	41.54	12.11	38.08	10.44
	7	6	43.18	10.73	42.91	11.12	42.61	11.51	43.27	11.92	41.54	11.12	38.08	9.57
	9	7.9	44.98	10.83	44.67	11.22	45.00	11.70	43.27	10.94	41.54	10.21	38.08	8.76
	11	9.8	46.81	10.94	46.47	11.33	45.00	10.74	43.27	10.04	41.54	9.34	38.08	8.06
	13	11.8	48.78	11.06	48.46	11.15	45.00	9.81	43.27	9.16	41.54	8.52	38.08	7.50
	15	13.7	50.69	11.18	48.46	10.23	45.00	8.98	43.27	8.38	41.54	7.89	38.08	7.04
110%	-25	-25.4	21.29	9.63	22.27	10.14	23.11	10.64	23.48	10.89	23.82	11.13	24.43	11.62
	-19.8	-20	23.77	10.02	24.45	10.51	25.01	10.98	25.25	11.22	25.47	11.45	25.84	11.92
	-18.8	-19	24.33	10.10	24.96	10.59	25.47	11.06	25.69	11.30	25.88	11.53	26.22	12.00
	-16.7	-17	25.52	10.29	26.05	10.77	26.47	11.24	26.65	11.47	26.81	11.71	27.06	12.17
	-13.7	-15	26.80	10.56	27.24	11.04	27.58	11.51	27.72	11.74	27.84	11.97	28.02	12.44
	-11.8	-13	28.17	10.75	28.52	11.23	28.78	11.69	28.89	11.93	28.97	12.16	29.09	12.62
	-9.8	-11	29.62	10.96	29.89	11.44	30.08	11.90	30.14	12.13	30.19	12.36	30.25	12.82
	-9.5	-10	30.37	11.02	30.60	11.49	30.75	11.95	30.81	12.18	30.84	12.41	30.86	12.87
	-8.5	-9.1	31.06	11.13	31.26	11.60	31.38	12.06	31.42	12.29	31.44	12.52	31.43	12.98
	-7	-7.6	32.24	11.30	32.39	11.77	32.46	12.23	32.47	12.46	32.47	12.69	32.42	13.15
	-5	-5.6	33.87	11.55	33.95	12.01	33.95	12.48	33.94	12.70	33.90	12.93	33.80	13.39
	-3	-3.7	35.47	11.63	35.49	12.09	35.44	12.55	35.39	12.78	35.33	13.00	34.90	12.96
	0	-0.7	38.10	11.79	38.02	12.24	37.89	12.68	37.80	12.91	38.08	13.11	34.90	11.40
	3	2.2	40.43	11.74	40.26	12.17	40.05	12.60	39.66	12.34	38.08	11.53	34.90	10.00
	5	4.1	40.87	10.98	40.64	11.38	40.36	11.78	39.66	11.33	38.08	10.59	34.90	9.15
	7	6	42.28	10.87	42.00	11.26	41.25	11.07	39.66	10.38	38.08	9.71	34.90	8.37
	9	7.9	44.06	10.98	44.42	11.48	41.25	10.16	39.66	9.51	38.08	8.87	34.90	7.73
	11	9.8	45.88	11.10	44.42	10.52	41.25	9.30	39.66	8.71	38.08	8.13	34.90	7.21
	13	11.8	47.60	10.77	44.42	9.60	41.25	8.46	39.66	7.97	38.08	7.58	34.90	6.69
	15	13.7	47.60	9.87	44.42	8.79	41.25	7.82	39.66	7.44	38.08	7.07	34.90	6.24

Abbreviations:
CR: Combination ratio
TC: Total capacity (kW)
PI: Power input (compressor + outdoor fan motor) (kW)

Notes:
Shaded cells indicate rating condition.

Table 2-9.9: 12HP heating capacity (continued)

Combination (%) (Capacity index)	Outdoor air temp.		Indoor air temp. °C DB											
			16		18		20		21		22		24	
			TC	PI	TC	PI	TC	PI	TC	PI	TC	PI	TC	PI
	°C DB	°C WB	kW	kW	kW	kW	kW	kW	kW	kW	kW	kW	kW	kW
100%	-25	-25.4	20.73	9.73	21.69	10.25	22.50	10.75	22.87	11.00	23.20	11.25	23.80	11.74
	-19.8	-20	23.17	10.13	23.83	10.62	24.36	11.10	24.60	11.34	24.80	11.57	25.16	12.04
	-18.8	-19	23.72	10.22	24.32	10.70	24.82	11.18	25.02	11.42	25.21	11.65	25.53	12.12
	-16.7	-17	24.89	10.41	25.40	10.89	25.80	11.36	25.97	11.60	26.12	11.83	26.36	12.29
	-13.7	-15	26.16	10.68	26.58	11.17	26.90	11.64	27.03	11.87	27.14	12.10	27.31	12.57
	-11.8	-13	27.52	10.89	27.85	11.36	28.09	11.83	28.18	12.06	28.25	12.29	28.36	12.75
	-9.8	-11	28.95	11.11	29.20	11.58	29.37	12.04	29.42	12.27	29.46	12.51	29.50	12.97
	-9.5	-10	29.69	11.17	29.90	11.63	30.03	12.10	30.07	12.33	30.10	12.55	30.11	13.01
	-8.5	-9.1	30.38	11.28	30.55	11.75	30.65	12.21	30.68	12.44	30.69	12.67	30.67	13.12
	-7	-7.6	31.54	11.46	31.67	11.93	31.72	12.39	31.72	12.62	31.71	12.84	31.73	13.13
	-5	-5.6	33.16	11.71	33.21	12.18	33.20	12.64	33.17	12.86	33.13	13.09	31.73	12.28
	-3	-3.7	34.74	11.81	34.73	12.26	34.66	12.72	34.61	12.94	34.62	12.95	31.73	11.33
	0	-0.7	37.34	11.97	37.24	12.42	37.50	12.87	36.06	12.11	34.62	11.36	31.73	9.90
	3	2.2	39.64	11.92	39.45	12.35	37.50	11.29	36.06	10.61	34.62	9.95	31.73	8.65
	5	4.1	40.05	11.16	40.38	11.64	37.50	10.35	36.06	9.73	34.62	9.11	31.73	8.01
	7	6	41.43	11.05	40.38	10.67	37.50	9.48	36.06	8.90	34.62	8.32	31.73	7.41
	9	7.9	43.27	10.90	40.38	9.77	37.50	8.65	36.06	8.11	34.62	7.64	31.73	6.85
	11	9.8	43.27	9.98	40.38	8.94	37.50	7.94	36.06	7.54	34.62	7.16	31.73	6.37
	13	11.8	43.27	9.09	40.38	8.12	37.50	7.39	36.06	7.02	34.62	6.65	31.73	5.89
	15	13.7	43.27	8.32	40.38	7.54	37.50	6.90	36.06	6.58	34.62	6.18	31.73	5.45
90%	-25	-25.4	20.29	9.86	21.22	10.38	22.02	10.89	22.37	11.14	22.70	11.39	23.27	11.89
	-19.8	-20	22.68	10.27	23.31	10.76	23.82	11.24	24.04	11.48	24.24	11.72	24.57	12.19
	-18.8	-19	23.22	10.36	23.80	10.85	24.26	11.33	24.46	11.56	24.64	11.80	24.93	12.27
	-16.7	-17	24.38	10.56	24.85	11.04	25.23	11.51	25.39	11.75	25.52	11.98	25.75	12.45
	-13.7	-15	25.63	10.84	26.01	11.32	26.31	11.79	26.42	12.03	26.52	12.26	26.67	12.73
	-11.8	-13	26.96	11.05	27.26	11.53	27.48	11.99	27.56	12.23	27.62	12.46	27.71	12.92
	-9.8	-11	28.37	11.28	28.59	11.75	28.74	12.22	28.78	12.45	28.81	12.68	28.56	12.70
	-9.5	-10	29.11	11.34	29.29	11.81	29.40	12.27	29.43	12.50	29.44	12.73	28.56	12.26
	-8.5	-9.1	29.78	11.46	29.93	11.93	30.01	12.39	30.02	12.62	30.02	12.85	28.56	11.94
	-7	-7.6	30.93	11.65	31.03	12.12	31.05	12.57	31.05	12.80	31.15	12.89	28.56	11.35
	-5	-5.6	32.52	11.91	32.55	12.37	32.51	12.83	32.45	12.78	31.15	12.03	28.56	10.56
	-3	-3.7	34.09	12.01	34.05	12.47	33.75	12.49	32.45	11.77	31.15	11.07	28.56	9.71
	0	-0.7	36.65	12.19	36.35	12.22	33.75	10.91	32.45	10.28	31.15	9.65	28.56	8.43
	3	2.2	38.94	11.88	36.35	10.68	33.75	9.53	32.45	8.97	31.15	8.40	28.56	7.61
	5	4.1	38.94	10.87	36.35	9.76	33.75	8.70	32.45	8.18	31.15	7.81	28.56	7.12
	7	6	38.94	9.92	36.35	8.92	33.75	7.95	32.45	7.65	31.15	7.21	28.56	6.47
	9	7.9	38.94	9.06	36.35	8.13	33.75	7.34	32.45	6.99	31.15	6.66	28.56	5.98
	11	9.8	38.94	8.27	36.35	7.53	33.75	6.87	32.45	6.55	31.15	6.19	28.56	5.54
	13	11.8	38.94	7.57	36.35	7.02	33.75	6.37	32.45	6.05	31.15	5.74	28.56	5.10
	15	13.7	38.94	7.07	36.35	6.53	33.75	5.91	32.45	5.60	31.15	5.29	28.56	4.68
80%	-25	-25.4	19.99	10.03	20.89	10.55	21.66	11.06	22.00	11.31	22.31	11.57	22.87	12.07
	-19.8	-20	22.31	10.45	22.90	10.94	23.39	11.42	23.59	11.66	23.78	11.90	24.09	12.38
	-18.8	-19	22.84	10.54	23.38	11.03	23.82	11.51	24.00	11.75	24.16	11.99	24.44	12.46
	-16.7	-17	23.97	10.75	24.41	11.23	24.76	11.70	24.90	11.94	25.03	12.17	25.38	12.62
	-13.7	-15	25.20	11.04	25.55	11.52	25.81	11.99	25.92	12.23	26.00	12.46	25.38	12.15
	-11.8	-13	26.51	11.26	26.77	11.74	26.96	12.20	27.03	12.43	27.08	12.67	25.38	11.51
	-9.8	-11	27.90	11.50	28.08	11.97	28.19	12.43	28.23	12.66	27.69	12.23	25.38	10.83
	-9.5	-10	28.62	11.57	28.76	12.03	28.84	12.49	28.85	12.50	27.69	11.78	25.38	10.42
	-8.5	-9.1	29.28	11.69	29.39	12.16	30.00	12.84	28.85	12.14	27.69	11.44	25.38	10.11
	-7	-7.6	30.41	11.89	30.47	12.35	30.00	12.19	28.85	11.51	27.69	10.86	25.38	9.59
	-5	-5.6	31.97	12.16	32.31	12.64	30.00	11.33	28.85	10.69	27.69	10.08	25.38	8.87
	-3	-3.7	33.51	12.27	32.31	11.60	30.00	10.39	28.85	9.80	27.69	9.23	25.38	8.19
	0	-0.7	34.62	11.16	32.31	10.06	30.00	9.01	28.85	8.50	27.69	8.05	25.38	7.39
	3	2.2	34.62	9.69	32.31	8.74	30.00	7.87	28.85	7.58	27.69	7.28	25.38	6.67
	5	4.1	34.62	8.84	32.31	7.97	30.00	7.37	28.85	7.08	27.69	6.81	25.38	6.23
	7	6	34.62	8.05	32.31	7.42	30.00	6.79	28.85	6.47	27.69	6.17	25.38	5.57
	9	7.9	34.62	7.41	32.31	6.83	30.00	6.26	28.85	5.98	27.69	5.70	25.38	5.14
	11	9.8	34.62	6.90	32.31	6.34	30.00	5.80	28.85	5.54	27.69	5.26	25.38	4.73
	13	11.8	34.62	6.41	32.31	5.88	30.00	5.35	28.85	5.09	27.69	4.83	25.38	4.36
	15	13.7	34.62	6.01	32.31	5.47	30.00	4.94	28.85	4.68	27.69	4.45	25.38	4.05

Abbreviations:
CR: Combination ratio
TC: Total capacity (kW)
PI: Power input (compressor + outdoor fan motor) (kW)

Notes:

Shaded cells indicate rating condition.

Table 2-9.9: 12HP heating capacity (continued)

Combination (%) (Capacity index)	Outdoor air temp.		Indoor air temp. °C DB											
			16		18		20		21		22		24	
			TC	PI	TC	PI	TC	PI	TC	PI	TC	PI	TC	PI
	°C DB	°C WB	kW	kW	kW	kW	kW	kW	kW	kW	kW	kW	kW	kW
70%	-25	-25.4	19.85	10.25	20.72	10.78	21.45	11.30	21.77	11.55	22.07	11.81	22.21	11.98
	-19.8	-20	22.08	10.69	22.63	11.18	23.07	11.66	23.26	11.90	23.43	12.15	22.21	11.32
	-18.8	-19	22.59	10.78	23.09	11.27	23.49	11.75	23.65	11.99	24.23	12.44	22.21	11.12
	-16.7	-17	23.69	11.00	24.09	11.48	24.40	11.95	24.52	12.19	24.23	11.94	22.21	10.66
	-13.7	-15	24.89	11.30	25.19	11.78	25.42	12.25	25.24	12.09	24.23	11.43	22.21	10.19
	-11.8	-13	26.16	11.53	26.38	12.01	26.25	12.04	25.24	11.39	24.23	10.77	22.21	9.59
	-9.8	-11	27.52	11.79	27.66	12.25	26.25	11.27	25.24	10.67	24.23	10.09	22.21	8.96
	-9.5	-10	28.22	11.86	28.27	12.05	26.25	10.83	25.24	10.25	24.23	9.69	22.21	8.60
	-8.5	-9.1	28.86	11.99	28.27	11.67	26.25	10.49	25.24	9.93	24.23	9.39	22.21	8.31
	-7	-7.6	30.29	12.21	28.27	11.02	26.25	9.91	25.24	9.38	24.23	8.85	22.21	7.98
	-5	-5.6	30.29	11.26	28.27	10.19	26.25	9.15	25.24	8.66	24.23	8.18	22.21	7.56
	-3	-3.7	30.29	10.27	28.27	9.30	26.25	8.35	25.24	7.96	24.23	7.67	22.21	7.08
	0	-0.7	30.29	8.84	28.27	8.00	26.25	7.44	25.24	7.18	24.23	6.91	22.21	6.37
	3	2.2	30.29	7.65	28.27	7.19	26.25	6.72	25.24	6.49	24.23	6.24	22.21	5.75
	5	4.1	30.29	7.17	28.27	6.74	26.25	6.29	25.24	6.06	24.23	5.83	22.21	5.38
	7	6	30.29	6.65	28.27	6.14	26.25	5.63	25.24	5.38	24.23	5.13	22.21	4.64
	9	7.9	30.29	6.13	28.27	5.64	26.25	5.20	25.24	4.97	24.23	4.74	22.21	4.37
	11	9.8	30.29	5.66	28.27	5.22	26.25	4.80	25.24	4.57	24.23	4.38	22.21	4.05
	13	11.8	30.29	5.23	28.27	4.80	26.25	4.40	25.24	4.21	24.23	4.05	22.21	3.73
	15	13.7	30.29	4.84	28.27	4.40	26.25	4.07	25.24	3.90	24.23	3.75	22.21	3.45
60%	-25	-25.4	19.93	10.56	20.74	11.09	21.42	11.62	21.63	11.73	20.77	11.14	19.04	10.10
	-19.8	-20	22.02	11.01	22.51	11.50	22.50	11.51	21.63	10.92	20.77	10.37	19.04	9.33
	-18.8	-19	22.50	11.11	22.94	11.60	22.50	11.27	21.63	10.69	20.77	10.15	19.04	9.12
	-16.7	-17	23.56	11.33	24.23	11.92	22.50	10.73	21.63	10.19	20.77	9.66	19.04	8.67
	-13.7	-15	24.70	11.65	24.23	11.31	22.50	10.19	21.63	9.68	20.77	9.18	19.04	8.22
	-11.8	-13	25.96	11.71	24.23	10.57	22.50	9.54	21.63	9.05	20.77	8.58	19.04	7.84
	-9.8	-11	25.96	10.85	24.23	9.82	22.50	8.87	21.63	8.41	20.77	8.00	19.04	7.47
	-9.5	-10	25.96	10.38	24.23	9.40	22.50	8.50	21.63	8.05	20.77	7.77	19.04	7.24
	-8.5	-9.1	25.96	10.01	24.23	9.08	22.50	8.20	21.63	7.85	20.77	7.59	19.04	7.07
	-7	-7.6	25.96	9.40	24.23	8.53	22.50	7.79	21.63	7.54	20.77	7.30	19.04	6.79
	-5	-5.6	25.96	8.63	24.23	7.84	22.50	7.38	21.63	7.15	20.77	6.91	19.04	6.41
	-3	-3.7	25.96	7.82	24.23	7.36	22.50	6.92	21.63	6.70	20.77	6.46	19.04	6.00
	0	-0.7	25.96	7.02	24.23	6.63	22.50	6.23	21.63	6.03	20.77	5.82	19.04	5.42
	3	2.2	25.96	6.35	24.23	5.99	22.50	5.62	21.63	5.43	20.77	5.26	19.04	4.96
	5	4.1	25.96	5.94	24.23	5.60	22.50	5.25	21.63	5.10	20.77	4.88	19.04	4.38
	7	6	25.96	5.29	24.23	4.92	22.50	4.52	21.63	4.37	20.77	4.21	19.04	3.91
	9	7.9	25.96	4.87	24.23	4.54	22.50	4.22	21.63	4.09	20.77	3.95	19.04	3.65
	11	9.8	25.96	4.50	24.23	4.18	22.50	3.91	21.63	3.78	20.77	3.66	19.04	3.38
	13	11.8	25.96	4.12	24.23	3.86	22.50	3.61	21.63	3.48	20.77	3.36	19.04	3.11
	15	13.7	25.96	3.81	24.23	3.58	22.50	3.33	21.63	3.21	20.77	3.09	19.04	2.86
50%	-25	-25.4	20.28	11.01	20.19	10.77	18.75	9.74	18.03	9.30	17.31	8.89	15.87	8.15
	-19.8	-20	21.63	10.83	20.19	9.76	18.75	8.86	18.03	8.44	17.31	8.05	15.87	7.59
	-18.8	-19	21.63	10.52	20.19	9.51	18.75	8.63	18.03	8.22	17.31	7.85	15.87	7.47
	-16.7	-17	21.63	9.88	20.19	8.95	18.75	8.14	18.03	7.76	17.31	7.58	15.87	7.19
	-13.7	-15	21.63	9.26	20.19	8.43	18.75	7.71	18.03	7.52	17.31	7.33	15.87	6.92
	-11.8	-13	21.63	8.57	20.19	7.80	18.75	7.37	18.03	7.18	17.31	6.99	15.87	6.57
	-9.8	-11	21.63	7.88	20.19	7.39	18.75	7.02	18.03	6.83	17.31	6.63	15.87	6.22
	-9.5	-10	21.63	7.51	20.19	7.18	18.75	6.82	18.03	6.62	17.31	6.43	15.87	6.02
	-8.5	-9.1	21.63	7.35	20.19	7.02	18.75	6.66	18.03	6.47	17.31	6.27	15.87	5.86
	-7	-7.6	21.63	7.08	20.19	6.74	18.75	6.39	18.03	6.20	17.31	6.01	15.87	5.61
	-5	-5.6	21.63	6.71	20.19	6.38	18.75	6.03	18.03	5.85	17.31	5.67	15.87	5.35
	-3	-3.7	21.63	6.29	20.19	5.98	18.75	5.65	18.03	5.47	17.31	5.32	15.87	5.06
	0	-0.7	21.63	5.67	20.19	5.38	18.75	5.11	18.03	4.99	17.31	4.88	15.87	4.64
	3	2.2	21.63	5.12	20.19	4.89	18.75	4.68	18.03	4.58	17.31	4.46	15.87	4.24
	5	4.1	21.63	4.81	20.19	4.53	18.75	4.17	18.03	4.00	17.31	3.83	15.87	3.52
	7	6	21.63	4.08	20.19	3.86	18.75	3.64	18.03	3.53	17.31	3.42	15.87	3.19
	9	7.9	21.63	3.80	20.19	3.61	18.75	3.40	18.03	3.28	17.31	3.16	15.87	2.93
	11	9.8	21.63	3.52	20.19	3.33	18.75	3.14	18.03	3.03	17.31	2.92	15.87	2.70
	13	11.8	21.63	3.22	20.19	3.05	18.75	2.87	18.03	2.77	17.31	2.67	15.87	2.46
	15	13.7	21.63	2.96	20.19	2.80	18.75	2.63	18.03	2.55	17.31	2.47	15.87	2.33

Abbreviations:
CR: Combination ratio
TC: Total capacity (kW)
PI: Power input (compressor + outdoor fan motor) (kW)
Notes:
Shaded cells indicate rating condition.

Table 2-9.10: 14HP heating capacity

Combination (%) (Capacity index)	Outdoor air temp.		Indoor air temp. °C DB											
			16		18		20		21		22		24	
			TC	PI	TC	PI	TC	PI	TC	PI	TC	PI	TC	PI
	°C DB	°C WB	kW	kW	kW	kW	kW	kW	kW	kW	kW	kW	kW	kW
130%	-25	-25.4	25.18	9.07	25.29	9.45	25.36	9.83	25.40	10.01	25.42	10.20	25.46	10.59
	-19.8	-20	30.29	9.68	30.26	10.06	30.21	10.45	30.17	10.64	30.13	10.84	30.04	11.23
	-18.8	-19	31.25	9.80	31.20	10.19	31.12	10.58	31.08	10.77	31.02	10.97	30.91	11.36
	-16.7	-17	33.17	10.07	33.09	10.46	32.97	10.85	32.90	11.05	32.83	11.24	32.67	11.65
	-13.7	-15	35.12	10.41	35.00	10.81	34.84	11.20	34.75	11.41	34.66	11.61	34.45	12.02
	-11.8	-13	37.09	10.68	36.93	11.08	36.74	11.48	36.63	11.69	36.52	11.89	36.27	12.31
	-9.8	-11	39.09	10.97	38.89	11.38	38.66	11.78	38.53	11.99	38.40	12.20	38.13	12.62
	-9.5	-10	40.09	11.07	39.88	11.47	39.63	11.88	39.50	12.08	39.36	12.29	39.06	12.72
	-8.5	-9.1	41.00	11.21	40.78	11.62	40.51	12.03	40.37	12.23	40.22	12.44	39.91	12.87
	-7	-7.6	42.53	11.44	42.28	11.85	41.99	12.26	41.84	12.47	41.68	12.68	41.34	13.12
	-5	-5.6	44.60	11.76	44.32	12.17	44.00	12.59	43.83	12.80	43.65	13.02	43.29	13.45
	-3	-3.7	46.58	11.91	46.28	12.32	45.93	12.74	45.75	12.95	45.56	13.17	45.16	13.61
	0	-0.7	49.78	12.16	49.43	12.57	49.04	12.98	48.84	13.20	48.63	13.41	48.19	13.85
	3	2.2	52.41	12.15	52.02	12.55	51.60	12.96	51.39	13.17	51.16	13.38	49.50	12.89
	5	4.1	52.32	11.27	51.91	11.64	51.48	12.02	51.26	12.21	51.04	12.41	49.50	11.97
	7	6	53.82	11.13	53.39	11.49	52.94	11.86	52.71	12.06	52.47	12.25	49.50	11.10
	9	7.9	55.91	11.25	55.45	11.61	54.98	11.99	54.74	12.18	54.00	11.82	49.50	10.32
	11	9.8	58.03	11.37	57.56	11.73	57.06	12.11	56.25	11.71	54.00	11.02	49.50	9.65
	13	11.8	60.31	11.50	59.81	11.86	58.50	11.52	56.25	10.76	54.00	10.20	49.50	8.99
	15	13.7	62.53	11.62	63.00	12.11	58.50	10.61	56.25	10.07	54.00	9.54	49.50	8.40
120%	-25	-25.4	24.27	9.13	24.37	9.51	24.45	9.88	24.48	10.07	24.50	10.26	24.54	10.65
	-19.8	-20	29.37	9.76	29.34	10.14	29.28	10.52	29.24	10.72	29.20	10.91	29.10	11.31
	-18.8	-19	30.32	9.88	30.27	10.27	30.19	10.66	30.14	10.85	30.09	11.05	29.97	11.45
	-16.7	-17	32.24	10.16	32.15	10.54	32.03	10.94	31.96	11.13	31.88	11.33	31.72	11.74
	-13.7	-15	34.19	10.51	34.05	10.90	33.89	11.30	33.80	11.50	33.70	11.71	33.50	12.12
	-11.8	-13	36.15	10.79	35.98	11.18	35.78	11.59	35.67	11.79	35.55	12.00	35.31	12.42
	-9.8	-11	38.14	11.08	37.93	11.49	37.69	11.89	37.56	12.10	37.43	12.31	37.15	12.74
	-9.5	-10	39.14	11.18	38.91	11.58	38.66	11.99	38.52	12.20	38.38	12.41	38.08	12.84
	-8.5	-9.1	40.05	11.33	39.81	11.73	39.54	12.14	39.39	12.35	39.24	12.56	38.93	12.99
	-7	-7.6	41.57	11.56	41.31	11.97	41.01	12.39	40.85	12.60	40.69	12.81	40.35	13.25
	-5	-5.6	43.62	11.89	43.33	12.30	43.00	12.72	42.83	12.93	42.65	13.15	42.28	13.59
	-3	-3.7	45.60	12.05	45.28	12.46	44.93	12.88	44.74	13.09	44.55	13.31	44.15	13.75
	0	-0.7	48.78	12.31	48.42	12.72	48.02	13.14	47.82	13.35	47.60	13.57	45.69	12.93
	3	2.2	51.40	12.31	51.00	12.70	50.57	13.12	50.35	13.33	49.85	13.13	45.69	11.57
	5	4.1	51.30	11.41	50.88	11.78	50.45	12.16	50.23	12.36	49.85	12.21	45.69	10.76
	7	6	52.79	11.28	52.35	11.64	51.90	12.01	51.92	12.06	49.85	11.32	45.69	10.00
	9	7.9	54.87	11.40	54.41	11.76	54.00	11.87	51.92	11.16	49.85	10.53	45.69	9.33
	11	9.8	56.98	11.53	56.50	11.89	54.00	10.98	51.92	10.35	49.85	9.79	45.69	8.71
	13	11.8	59.25	11.66	58.15	11.42	54.00	10.18	51.92	9.65	49.85	9.13	45.69	8.10
	15	13.7	62.31	11.84	58.15	10.48	54.00	9.52	51.92	9.06	49.85	8.54	45.69	7.56
110%	-25	-25.4	23.44	9.20	23.54	9.58	23.61	9.96	23.64	10.15	23.66	10.34	23.70	10.72
	-19.8	-20	28.52	9.85	28.49	10.23	28.42	10.62	28.38	10.81	28.34	11.01	28.24	11.41
	-18.8	-19	29.47	9.98	29.41	10.36	29.33	10.75	29.28	10.95	29.22	11.15	29.10	11.55
	-16.7	-17	31.39	10.26	31.29	10.65	31.16	11.04	31.08	11.24	31.01	11.44	30.84	11.85
	-13.7	-15	33.32	10.62	33.18	11.01	33.01	11.41	32.92	11.62	32.82	11.82	32.61	12.24
	-11.8	-13	35.28	10.91	35.10	11.31	34.89	11.71	34.77	11.92	34.66	12.12	34.41	12.55
	-9.8	-11	37.25	11.21	37.04	11.62	36.79	12.03	36.66	12.23	36.52	12.44	36.24	12.87
	-9.5	-10	38.25	11.32	38.02	11.72	37.75	12.13	37.61	12.34	37.47	12.55	37.16	12.98
	-8.5	-9.1	39.15	11.47	38.90	11.87	38.63	12.28	38.48	12.50	38.32	12.71	38.01	13.14
	-7	-7.6	40.67	11.71	40.39	12.12	40.09	12.54	39.93	12.75	39.77	12.96	39.42	13.40
	-5	-5.6	42.71	12.04	42.41	12.46	42.07	12.88	41.90	13.10	41.72	13.31	41.88	13.87
	-3	-3.7	44.68	12.21	44.35	12.62	43.98	13.05	43.79	13.26	43.60	13.48	41.88	12.95
	0	-0.7	47.84	12.48	47.47	12.89	47.06	13.32	47.60	13.70	45.69	12.98	41.88	11.54
	3	2.2	50.44	12.49	50.04	12.89	49.50	13.00	47.60	12.31	45.69	11.62	41.88	10.38
	5	4.1	50.34	11.58	49.92	11.95	49.50	12.09	47.60	11.43	45.69	10.78	41.88	9.72
	7	6	51.82	11.45	51.37	11.81	49.50	11.20	47.60	10.60	45.69	10.04	41.88	8.95
	9	7.9	53.88	11.58	53.31	11.63	49.50	10.34	47.60	9.83	45.69	9.34	41.88	8.35
	11	9.8	57.12	11.95	53.31	10.69	49.50	9.66	47.60	9.18	45.69	8.71	41.88	7.78
	13	11.8	57.12	10.97	53.31	9.94	49.50	9.09	47.60	8.60	45.69	8.12	41.88	7.24
	15	13.7	57.12	10.11	53.31	9.28	49.50	8.40	47.60	7.97	45.69	7.53	41.88	6.67

Abbreviations:
CR: Combination ratio
TC: Total capacity (kW)
PI: Power input (compressor + outdoor fan motor) (kW)

Notes:
Shaded cells indicate rating condition.

Table 2-9.10: 14HP heating capacity (continued)

Combination (%) (Capacity index)	Outdoor air temp.		Indoor air temp. °C DB											
			16		18		20		21		22		24	
			TC	PI	TC	PI	TC	PI	TC	PI	TC	PI	TC	PI
	°C DB	°C WB	kW	kW	kW	kW	kW	kW	kW	kW	kW	kW	kW	kW
100%	-25	-25.4	22.70	9.29	22.79	9.66	22.85	10.04	22.88	10.23	22.90	10.42	22.94	10.81
	-19.8	-20	27.75	9.96	27.71	10.34	27.64	10.73	27.60	10.92	27.55	11.12	27.45	11.52
	-18.8	-19	28.70	10.09	28.63	10.48	28.54	10.87	28.49	11.06	28.43	11.26	28.30	11.66
	-16.7	-17	30.61	10.38	30.49	10.77	30.36	11.16	30.28	11.36	30.20	11.57	30.03	11.97
	-13.7	-15	32.53	10.75	32.38	11.15	32.20	11.55	32.10	11.75	32.00	11.96	31.79	12.38
	-11.8	-13	34.47	11.05	34.28	11.45	34.06	11.86	33.95	12.06	33.83	12.27	33.58	12.70
	-9.8	-11	36.44	11.37	36.21	11.77	35.96	12.19	35.82	12.40	35.68	12.61	35.39	13.04
	-9.5	-10	37.43	11.48	37.18	11.88	36.91	12.29	36.77	12.50	36.62	12.71	36.31	13.15
	-8.5	-9.1	38.32	11.63	38.06	12.04	37.78	12.46	37.63	12.67	37.47	12.88	37.15	13.32
	-7	-7.6	39.83	11.89	39.54	12.30	39.23	12.72	39.07	12.93	38.90	13.15	38.08	13.15
	-5	-5.6	41.86	12.23	41.54	12.65	41.20	13.07	41.02	13.29	41.54	13.71	38.08	12.38
	-3	-3.7	43.81	12.41	43.47	12.82	43.10	13.25	43.27	13.46	41.54	12.81	38.08	11.50
	0	-0.7	46.96	12.69	46.57	13.11	45.00	12.66	43.27	12.05	41.54	11.41	38.08	10.27
	3	2.2	49.54	12.71	48.46	12.51	45.00	11.32	43.27	10.73	41.54	10.24	38.08	9.27
	5	4.1	49.43	11.78	48.46	11.63	45.00	10.51	43.27	10.04	41.54	9.59	38.08	8.68
	7	6	51.92	11.89	48.46	10.77	45.00	9.78	43.27	9.30	41.54	8.82	38.08	7.90
	9	7.9	51.92	10.99	48.46	9.95	45.00	9.08	43.27	8.64	41.54	8.23	38.08	7.39
	11	9.8	51.92	10.16	48.46	9.29	45.00	8.49	43.27	8.06	41.54	7.64	38.08	6.89
	13	11.8	51.92	9.45	48.46	8.64	45.00	7.84	43.27	7.46	41.54	7.06	38.08	6.31
	15	13.7	51.92	8.81	48.46	8.06	45.00	7.28	43.27	6.91	41.54	6.54	38.08	5.94
90%	-25	-25.4	22.03	9.39	22.12	9.77	22.18	10.15	22.20	10.34	22.22	10.53	22.26	10.92
	-19.8	-20	27.06	10.09	27.01	10.47	26.93	10.86	26.89	11.06	26.84	11.26	26.73	11.66
	-18.8	-19	28.00	10.23	27.93	10.62	27.83	11.01	27.77	11.21	27.71	11.41	27.58	11.81
	-16.7	-17	29.90	10.53	29.77	10.92	29.63	11.32	29.55	11.52	29.47	11.72	29.30	12.13
	-13.7	-15	31.80	10.92	31.64	11.32	31.46	11.72	31.36	11.92	31.25	12.13	31.04	12.55
	-11.8	-13	33.73	11.23	33.53	11.63	33.31	12.04	33.19	12.25	33.06	12.46	32.81	12.89
	-9.8	-11	35.68	11.56	35.44	11.97	35.18	12.38	35.04	12.59	34.90	12.81	34.27	12.94
	-9.5	-10	36.67	11.67	36.41	12.08	36.13	12.50	35.98	12.71	35.83	12.92	34.27	12.53
	-8.5	-9.1	37.56	11.84	37.28	12.25	36.99	12.66	36.83	12.88	37.38	13.35	34.27	12.22
	-7	-7.6	39.05	12.10	38.75	12.51	38.43	12.94	38.94	13.37	37.38	12.81	34.27	11.66
	-5	-5.6	41.06	12.46	40.73	12.88	40.50	13.20	38.94	12.63	37.38	12.06	34.27	10.89
	-3	-3.7	43.00	12.65	42.64	13.07	40.50	12.32	38.94	11.76	37.38	11.19	34.27	10.13
	0	-0.7	46.73	13.05	43.62	12.00	40.50	10.95	38.94	10.45	37.38	9.99	34.27	9.08
	3	2.2	46.73	11.72	43.62	10.70	40.50	9.83	38.94	9.42	37.38	9.00	34.27	8.20
	5	4.1	46.73	10.85	43.62	9.97	40.50	9.19	38.94	8.81	37.38	8.43	34.27	7.68
	7	6	46.73	10.06	43.62	9.26	40.50	8.43	38.94	8.02	37.38	7.63	34.27	6.86
	9	7.9	46.73	9.31	43.62	8.57	40.50	7.85	38.94	7.49	37.38	7.14	34.27	6.45
	11	9.8	46.73	8.67	43.62	7.97	40.50	7.30	38.94	6.94	37.38	6.61	34.27	6.02
	13	11.8	46.73	8.04	43.62	7.37	40.50	6.71	38.94	6.39	37.38	6.09	34.27	5.65
	15	13.7	46.73	7.55	43.62	6.83	40.50	6.19	38.94	5.94	37.38	5.73	34.27	5.32
80%	-25	-25.4	21.45	9.52	21.53	9.90	21.58	10.28	21.61	10.47	21.63	10.66	21.66	11.06
	-19.8	-20	26.45	10.26	26.38	10.64	26.30	11.03	26.25	11.23	26.20	11.43	26.09	11.84
	-18.8	-19	27.38	10.41	27.29	10.79	27.18	11.19	27.13	11.39	27.06	11.59	26.93	12.00
	-16.7	-17	29.25	10.72	29.12	11.12	28.97	11.51	28.89	11.72	28.80	11.92	28.63	12.33
	-13.7	-15	31.15	11.13	30.97	11.52	30.78	11.93	30.68	12.14	30.57	12.35	30.46	12.78
	-11.8	-13	33.06	11.45	32.84	11.86	32.61	12.27	32.49	12.48	32.36	12.69	30.46	12.16
	-9.8	-11	34.98	11.80	34.73	12.21	34.46	12.63	34.62	12.89	33.23	12.44	30.46	11.47
	-9.5	-10	35.96	11.92	35.69	12.33	36.00	12.94	34.62	12.49	33.23	12.02	30.46	11.04
	-8.5	-9.1	36.84	12.09	36.55	12.51	36.00	12.66	34.62	12.19	33.23	11.72	30.46	10.72
	-7	-7.6	38.32	12.37	38.77	13.04	36.00	12.13	34.62	11.66	33.23	11.16	30.46	10.17
	-5	-5.6	40.31	12.75	38.77	12.34	36.00	11.39	34.62	10.90	33.23	10.42	30.46	9.51
	-3	-3.7	41.54	12.39	38.77	11.48	36.00	10.54	34.62	10.11	33.23	9.68	30.46	8.84
	0	-0.7	41.54	11.06	38.77	10.19	36.00	9.41	34.62	9.03	33.23	8.66	30.46	7.92
	3	2.2	41.54	9.85	38.77	9.15	36.00	8.47	34.62	8.13	33.23	7.80	30.46	7.16
	5	4.1	41.54	9.18	38.77	8.54	36.00	7.91	34.62	7.60	33.23	7.29	30.46	6.70
	7	6	41.54	8.45	38.77	7.84	36.00	7.13	34.62	6.80	33.23	6.48	30.46	5.98
	9	7.9	41.54	7.82	38.77	7.26	36.00	6.64	34.62	6.36	33.23	6.08	30.46	5.70
	11	9.8	41.54	7.27	38.77	6.68	36.00	6.14	34.62	5.92	33.23	5.73	30.46	5.35
	13	11.8	41.54	6.68	38.77	6.15	36.00	5.72	34.62	5.55	33.23	5.38	30.46	5.02
	15	13.7	41.54	6.15	38.77	5.73	36.00	5.39	34.62	5.22	33.23	5.06	30.46	4.73

Abbreviations:
CR: Combination ratio
TC: Total capacity (kW)
PI: Power input (compressor + outdoor fan motor) (kW)

Notes:
Shaded cells indicate rating condition.

Table 2-9.10: 14HP heating capacity (continued)

Combination (%) (Capacity index)	Outdoor air temp.		Indoor air temp. °C DB											
			16		18		20		21		22		24	
			TC	PI	TC	PI	TC	PI	TC	PI	TC	PI	TC	PI
	°C DB	°C WB	kW	kW	kW	kW	kW	kW	kW	kW	kW	kW	kW	kW
70%	-25	-25.4	20.96	9.69	21.03	10.07	21.08	10.45	21.10	10.64	21.12	10.84	21.15	11.23
	-19.8	-20	25.90	10.47	25.83	10.86	25.74	11.25	25.69	11.45	25.64	11.66	25.53	12.07
	-18.8	-19	26.83	10.63	26.73	11.02	26.61	11.42	26.55	11.62	26.49	11.82	26.65	12.37
	-16.7	-17	28.68	10.97	28.54	11.36	28.38	11.77	28.29	11.97	28.21	12.18	26.65	11.91
	-13.7	-15	30.55	11.39	30.36	11.80	30.16	12.21	30.29	12.48	29.08	12.14	26.65	11.40
	-11.8	-13	32.43	11.74	32.21	12.15	31.50	12.25	30.29	11.88	29.08	11.51	26.65	10.71
	-9.8	-11	34.33	12.11	33.92	12.34	31.50	11.60	30.29	11.21	29.08	10.81	26.65	9.93
	-9.5	-10	35.29	12.24	33.92	11.96	31.50	11.20	30.29	10.80	29.08	10.39	26.65	9.52
	-8.5	-9.1	36.35	12.39	33.92	11.66	31.50	10.88	30.29	10.48	29.08	10.05	26.65	9.20
	-7	-7.6	36.35	11.89	33.92	11.13	31.50	10.34	30.29	9.92	29.08	9.51	26.65	8.73
	-5	-5.6	36.35	11.18	33.92	10.40	31.50	9.63	30.29	9.24	29.08	8.87	26.65	8.15
	-3	-3.7	36.35	10.36	33.92	9.61	31.50	8.92	30.29	8.57	29.08	8.23	26.65	7.57
	0	-0.7	36.35	9.18	33.92	8.55	31.50	7.95	30.29	7.66	29.08	7.36	26.65	6.90
	3	2.2	36.35	8.21	33.92	7.68	31.50	7.15	30.29	6.92	29.08	6.75	26.65	6.39
	5	4.1	36.35	7.66	33.92	7.16	31.50	6.74	30.29	6.59	29.08	6.21	26.65	5.70
	7	6	36.35	6.88	33.92	6.36	31.50	5.93	30.29	5.76	29.08	5.59	26.65	5.23
	9	7.9	36.35	6.43	33.92	5.92	31.50	5.62	30.29	5.46	29.08	5.30	26.65	5.00
	11	9.8	36.35	5.88	33.92	5.56	31.50	5.28	30.29	5.14	29.08	5.00	26.65	4.69
	13	11.8	36.35	5.47	33.92	5.24	31.50	4.96	30.29	4.82	29.08	4.70	26.65	4.38
	15	13.7	36.35	5.18	33.92	4.90	31.50	4.66	30.29	4.54	29.08	4.40	26.65	4.15
60%	-25	-25.4	20.56	9.92	20.62	10.30	20.66	10.68	20.68	10.88	20.70	11.08	20.73	11.48
	-19.8	-20	25.43	10.77	25.35	11.16	25.25	11.55	25.20	11.76	24.92	11.88	22.85	11.40
	-18.8	-19	26.34	10.94	26.23	11.33	26.11	11.73	25.96	11.90	24.92	11.66	22.85	11.15
	-16.7	-17	28.16	11.30	28.01	11.70	27.00	11.68	25.96	11.42	24.92	11.15	22.85	10.58
	-13.7	-15	30.00	11.76	29.08	11.75	27.00	11.21	25.96	10.92	24.92	10.61	22.85	9.94
	-11.8	-13	31.15	11.71	29.08	11.15	27.00	10.55	25.96	10.23	24.92	9.87	22.85	9.10
	-9.8	-11	31.15	11.08	29.08	10.48	27.00	9.80	25.96	9.42	24.92	9.07	22.85	8.37
	-9.5	-10	31.15	10.70	29.08	10.08	27.00	9.35	25.96	9.01	24.92	8.67	22.85	8.01
	-8.5	-9.1	31.15	10.39	29.08	9.73	27.00	9.04	25.96	8.71	24.92	8.38	22.85	7.74
	-7	-7.6	31.15	9.83	29.08	9.17	27.00	8.53	25.96	8.22	24.92	7.92	22.85	7.32
	-5	-5.6	31.15	9.11	29.08	8.51	27.00	7.93	25.96	7.65	24.92	7.38	22.85	6.93
	-3	-3.7	31.15	8.40	29.08	7.87	27.00	7.34	25.96	7.09	24.92	6.92	22.85	6.57
	0	-0.7	31.15	7.45	29.08	7.00	27.00	6.68	25.96	6.53	24.92	6.38	22.85	6.06
	3	2.2	31.15	6.67	29.08	6.43	27.00	6.19	25.96	6.06	24.92	5.92	22.85	5.64
	5	4.1	31.15	6.33	29.08	6.01	27.00	5.58	25.96	5.38	24.92	5.18	22.85	4.84
	7	6	31.15	5.52	29.08	5.30	27.00	5.06	25.96	4.92	24.92	4.79	22.85	4.51
	9	7.9	31.15	5.23	29.08	5.03	27.00	4.80	25.96	4.69	24.92	4.58	22.85	4.27
	11	9.8	31.15	4.91	29.08	4.73	27.00	4.53	25.96	4.40	24.92	4.26	22.85	3.99
	13	11.8	31.15	4.61	29.08	4.43	27.00	4.23	25.96	4.11	24.92	3.99	22.85	3.75
	15	13.7	31.15	4.33	29.08	4.16	27.00	3.98	25.96	3.89	24.92	3.80	22.85	3.56
50%	-25	-25.4	20.26	10.24	20.31	10.63	20.34	11.02	20.36	11.22	20.77	11.63	19.04	11.36
	-19.8	-20	25.03	11.18	24.23	11.28	22.50	10.94	21.63	10.76	20.77	10.57	19.04	10.16
	-18.8	-19	25.96	11.39	24.23	11.06	22.50	10.69	21.63	10.50	20.77	10.29	19.04	9.86
	-16.7	-17	25.96	10.93	24.23	10.55	22.50	10.13	21.63	9.91	20.77	9.68	19.04	9.02
	-13.7	-15	25.96	10.44	24.23	10.01	22.50	9.47	21.63	9.15	20.77	8.83	19.04	8.22
	-11.8	-13	25.96	9.79	24.23	9.20	22.50	8.60	21.63	8.31	20.77	8.03	19.04	7.48
	-9.8	-11	25.96	8.94	24.23	8.38	22.50	7.85	21.63	7.59	20.77	7.34	19.04	6.88
	-9.5	-10	25.96	8.50	24.23	7.99	22.50	7.49	21.63	7.25	20.77	7.00	19.04	6.62
	-8.5	-9.1	25.96	8.18	24.23	7.69	22.50	7.22	21.63	6.98	20.77	6.81	19.04	6.45
	-7	-7.6	25.96	7.68	24.23	7.23	22.50	6.84	21.63	6.69	20.77	6.54	19.04	6.21
	-5	-5.6	25.96	7.10	24.23	6.76	22.50	6.52	21.63	6.38	20.77	6.24	19.04	5.93
	-3	-3.7	25.96	6.62	24.23	6.41	22.50	6.18	21.63	6.06	20.77	5.93	19.04	5.65
	0	-0.7	25.96	6.12	24.23	5.93	22.50	5.72	21.63	5.62	20.77	5.50	19.04	5.25
	3	2.2	25.96	5.68	24.23	5.51	22.50	5.33	21.63	5.23	20.77	5.12	19.04	4.90
	5	4.1	25.96	5.10	24.23	4.79	22.50	4.54	21.63	4.44	20.77	4.33	19.04	4.11
	7	6	25.96	4.58	24.23	4.41	22.50	4.22	21.63	4.13	20.77	4.03	19.04	3.81
	9	7.9	25.96	4.35	24.23	4.19	22.50	3.99	21.63	3.89	20.77	3.78	19.04	3.55
	11	9.8	25.96	4.08	24.23	3.91	22.50	3.73	21.63	3.64	20.77	3.54	19.04	3.34
	13	11.8	25.96	3.80	24.23	3.66	22.50	3.50	21.63	3.42	20.77	3.33	19.04	3.15
	15	13.7	25.96	3.59	24.23	3.47	22.50	3.32	21.63	3.24	20.77	3.15	19.04	2.98

Abbreviations:
CR: Combination ratio
TC: Total capacity (kW)
PI: Power input (compressor + outdoor fan motor) (kW)

Notes:
Shaded cells indicate rating condition.

Table 2-9 11: 16HP heating capacity

Combination (%) (Capacity index)	Outdoor air temp.		Indoor air temp. °C DB											
			16		18		20		21		22		24	
			TC	PI	TC	PI	TC	PI	TC	PI	TC	PI	TC	PI
	°C DB	°C WB	kW	kW	kW	kW	kW	kW	kW	kW	kW	kW	kW	kW
130%	-25	-25.4	30.99	10.68	31.19	11.15	31.34	11.62	31.41	11.85	31.47	12.08	31.57	12.55
	-19.8	-20	34.56	11.11	34.58	11.58	34.55	12.04	34.53	12.27	34.49	12.50	34.40	12.97
	-18.8	-19	35.32	11.22	35.31	11.68	35.25	12.15	35.21	12.38	35.16	12.61	35.04	13.08
	-16.7	-17	36.91	11.46	36.85	11.93	36.73	12.39	36.66	12.62	36.59	12.86	36.41	13.33
	-13.7	-15	38.59	11.81	38.48	12.28	38.32	12.74	38.23	12.98	38.12	13.22	37.90	13.69
	-11.8	-13	40.36	12.08	40.21	12.55	40.00	13.02	39.88	13.26	39.76	13.50	39.49	13.98
	-9.8	-11	42.21	12.39	42.01	12.86	41.77	13.33	41.63	13.57	41.48	13.81	41.17	14.30
	-9.5	-10	43.16	12.49	42.95	12.96	42.68	13.43	42.53	13.67	42.37	13.91	42.04	14.39
	-8.5	-9.1	44.04	12.65	43.80	13.12	43.52	13.59	43.36	13.83	43.19	14.07	42.84	14.55
	-7	-7.6	45.52	12.91	45.26	13.38	44.95	13.85	44.78	14.09	44.60	14.33	44.22	14.82
	-5	-5.6	47.55	13.26	47.26	13.74	46.91	14.21	46.72	14.46	46.53	14.70	46.11	15.20
	-3	-3.7	49.54	13.45	49.21	13.91	48.84	14.39	48.63	14.63	48.42	14.87	47.98	15.37
	0	-0.7	52.77	13.75	52.40	14.21	51.98	14.68	51.76	14.92	51.53	15.16	51.04	15.65
	3	2.2	55.50	13.79	55.10	14.24	54.64	14.70	54.40	14.94	54.16	15.17	53.64	15.66
	5	4.1	55.54	12.94	55.13	13.36	54.69	13.79	54.45	14.00	54.21	14.23	53.70	14.68
	7	6	57.14	12.84	56.71	13.25	56.25	13.67	56.00	13.89	55.75	14.11	55.00	14.11
	9	7.9	59.31	13.01	58.86	13.42	58.37	13.84	58.12	14.05	57.85	14.27	55.00	13.13
	11	9.8	61.51	13.17	61.04	13.58	60.53	14.00	60.27	14.22	60.00	14.09	55.00	12.18
	13	11.8	63.87	13.35	63.37	13.75	62.85	14.18	62.50	13.99	60.00	13.04	55.00	11.26
	15	13.7	66.14	13.51	65.63	13.92	65.00	13.90	62.50	12.99	60.00	12.08	55.00	10.55
120%	-25	-25.4	30.12	10.78	30.31	11.25	30.46	11.72	30.52	11.95	30.58	12.18	30.68	12.65
	-19.8	-20	33.66	11.22	33.67	11.69	33.63	12.15	33.60	12.38	33.56	12.61	33.47	13.08
	-18.8	-19	34.41	11.33	34.39	11.80	34.33	12.26	34.28	12.49	34.23	12.72	34.10	13.19
	-16.7	-17	35.99	11.58	35.92	12.04	35.80	12.51	35.72	12.74	35.64	12.97	35.46	13.45
	-13.7	-15	37.67	11.93	37.54	12.40	37.37	12.87	37.27	13.11	37.16	13.34	36.93	13.82
	-11.8	-13	39.43	12.22	39.25	12.69	39.04	13.16	38.92	13.39	38.79	13.63	38.51	14.11
	-9.8	-11	41.26	12.53	41.05	13.00	40.79	13.47	40.65	13.71	40.50	13.95	40.18	14.44
	-9.5	-10	42.21	12.64	41.98	13.10	41.70	13.57	41.55	13.81	41.39	14.05	41.04	14.54
	-8.5	-9.1	43.08	12.80	42.83	13.27	42.53	13.74	42.37	13.98	42.20	14.22	41.84	14.71
	-7	-7.6	44.55	13.06	44.27	13.53	43.95	14.01	43.78	14.25	43.59	14.49	43.21	14.98
	-5	-5.6	46.58	13.43	46.26	13.90	45.91	14.38	45.71	14.62	45.51	14.87	45.09	15.37
	-3	-3.7	48.55	13.61	48.21	14.08	47.82	14.56	47.61	14.80	47.39	15.04	46.94	15.54
	0	-0.7	51.77	13.93	51.38	14.39	50.95	14.86	50.72	15.10	50.48	15.34	50.77	16.02
	3	2.2	54.48	13.98	54.06	14.43	53.60	14.89	53.35	15.13	53.10	15.37	50.77	14.47
	5	4.1	54.52	13.11	54.10	13.53	53.64	13.96	53.40	14.18	53.15	14.41	50.77	13.51
	7	6	56.11	13.02	55.67	13.43	55.19	13.85	54.95	14.07	55.38	14.36	50.77	12.55
	9	7.9	58.27	13.19	57.81	13.60	57.31	14.03	57.69	14.26	55.38	13.38	50.77	11.62
	11	9.8	60.46	13.36	59.98	13.77	60.00	14.14	57.69	13.28	55.38	12.43	50.77	10.82
	13	11.8	62.81	13.54	62.30	13.96	60.00	13.11	57.69	12.28	55.38	11.44	50.77	10.11
	15	13.7	65.07	13.71	64.62	13.79	60.00	12.13	57.69	11.32	55.38	10.68	50.77	9.49
110%	-25	-25.4	29.33	10.90	29.51	11.37	29.65	11.83	29.71	12.07	29.77	12.30	29.87	12.77
	-19.8	-20	32.84	11.35	32.83	11.82	32.79	12.28	32.75	12.51	32.71	12.74	32.61	13.21
	-18.8	-19	33.58	11.47	33.55	11.93	33.47	12.39	33.42	12.62	33.37	12.86	33.24	13.33
	-16.7	-17	35.15	11.72	35.06	12.18	34.93	12.65	34.85	12.88	34.77	13.12	34.58	13.59
	-13.7	-15	36.81	12.08	36.67	12.55	36.49	13.02	36.39	13.26	36.28	13.49	36.04	13.97
	-11.8	-13	38.56	12.38	38.37	12.84	38.14	13.31	38.02	13.55	37.88	13.79	37.60	14.27
	-9.8	-11	40.38	12.70	40.15	13.17	39.88	13.64	39.74	13.88	39.58	14.12	39.26	14.61
	-9.5	-10	41.32	12.81	41.07	13.27	40.78	13.74	40.63	13.98	40.46	14.22	40.11	14.71
	-8.5	-9.1	42.19	12.97	41.92	13.44	41.61	13.91	41.44	14.15	41.27	14.40	40.91	14.89
	-7	-7.6	43.65	13.24	43.36	13.71	43.02	14.19	42.84	14.43	42.65	14.67	42.26	15.17
	-5	-5.6	45.66	13.62	45.33	14.09	44.96	14.57	44.76	14.82	44.55	15.06	44.13	15.57
	-3	-3.7	47.62	13.81	47.26	14.28	46.86	14.76	46.64	15.01	46.42	15.25	46.54	15.85
	0	-0.7	50.82	14.14	50.41	14.60	49.97	15.08	49.73	15.32	49.49	15.57	46.54	14.29
	3	2.2	53.52	14.20	53.08	14.65	52.60	15.12	52.88	15.36	50.77	14.53	46.54	12.83
	5	4.1	53.56	13.32	53.12	13.74	52.65	14.17	52.88	14.38	50.77	13.56	46.54	11.91
	7	6	55.14	13.22	54.68	13.64	55.00	14.20	52.88	13.40	50.77	12.61	46.54	11.06
	9	7.9	57.28	13.41	56.81	13.82	55.00	13.24	52.88	12.46	50.77	11.70	46.54	10.32
	11	9.8	59.46	13.59	59.23	13.80	55.00	12.30	52.88	11.54	50.77	10.85	46.54	9.66
	13	11.8	61.80	13.78	59.23	12.78	55.00	11.30	52.88	10.71	50.77	10.13	46.54	9.00
	15	13.7	63.46	13.28	59.23	11.81	55.00	10.54	52.88	10.03	50.77	9.47	46.54	8.40

Abbreviations:
CR: Combination ratio
TC: Total capacity (kW)
PI: Power input (compressor + outdoor fan motor) (kW)

Notes:

Shaded cells indicate rating condition.

Table 2-9.11: 16HP heating capacity (continued)

Combination (%) (Capacity index)	Outdoor air temp.		Indoor air temp. °C DB											
			16		18		20		21		22		24	
			TC	PI	TC	PI	TC	PI	TC	PI	TC	PI	TC	PI
	°C DB	°C WB	kW	kW	kW	kW	kW	kW	kW	kW	kW	kW	kW	kW
100%	-25	-25.4	28.64	11.04	28.80	11.51	28.94	11.97	28.99	12.21	29.05	12.44	29.15	12.91
	-19.8	-20	32.10	11.51	32.07	11.97	32.02	12.44	31.98	12.67	31.93	12.90	31.83	13.37
	-18.8	-19	32.83	11.63	32.78	12.09	32.69	12.55	32.64	12.78	32.58	13.02	32.45	13.49
	-16.7	-17	34.38	11.89	34.28	12.35	34.13	12.82	34.05	13.05	33.96	13.29	33.78	13.76
	-13.7	-15	36.03	12.26	35.87	12.73	35.68	13.20	35.57	13.44	35.46	13.67	35.21	14.16
	-11.8	-13	37.76	12.56	37.55	13.03	37.31	13.50	37.18	13.74	37.05	13.98	36.76	14.47
	-9.8	-11	39.57	12.90	39.32	13.37	39.04	13.84	38.88	14.08	38.72	14.32	38.39	14.82
	-9.5	-10	40.50	13.01	40.23	13.48	39.93	13.95	39.76	14.19	39.59	14.43	39.24	14.92
	-8.5	-9.1	41.35	13.18	41.07	13.65	40.74	14.13	40.57	14.37	40.40	14.61	40.03	15.10
	-7	-7.6	42.81	13.46	42.49	13.93	42.14	14.41	41.96	14.65	41.76	14.90	41.37	15.40
	-5	-5.6	44.80	13.85	44.45	14.33	44.06	14.81	43.86	15.05	43.65	15.30	42.31	15.02
	-3	-3.7	46.74	14.06	46.36	14.53	45.95	15.01	45.73	15.25	46.15	15.66	42.31	14.06
	0	-0.7	49.92	14.40	49.49	14.86	50.00	15.64	48.08	14.88	46.15	14.11	42.31	12.56
	3	2.2	52.59	14.46	52.13	14.92	50.00	14.15	48.08	13.41	46.15	12.67	42.31	11.23
	5	4.1	52.64	13.56	52.18	13.99	50.00	13.19	48.08	12.49	46.15	11.76	42.31	10.54
	7	6	54.20	13.47	53.85	13.66	50.00	12.26	48.08	11.57	46.15	10.91	42.31	9.74
	9	7.9	56.34	13.67	53.85	12.71	50.00	11.37	48.08	10.71	46.15	10.23	42.31	9.13
	11	9.8	57.69	13.10	53.85	11.78	50.00	10.56	48.08	10.04	46.15	9.52	42.31	8.52
	13	11.8	57.69	12.10	53.85	10.82	50.00	9.85	48.08	9.36	46.15	8.86	42.31	7.90
	15	13.7	57.69	11.14	53.85	10.13	50.00	9.30	48.08	8.80	46.15	8.31	42.31	7.37
90%	-25	-25.4	28.03	11.21	28.18	11.68	28.31	12.15	28.36	12.38	28.41	12.62	28.51	13.09
	-19.8	-20	31.43	11.70	31.39	12.16	31.32	12.63	31.28	12.86	31.23	13.09	31.13	13.57
	-18.8	-19	32.15	11.82	32.09	12.28	31.99	12.75	31.93	12.98	31.87	13.22	31.74	13.69
	-16.7	-17	33.68	12.10	33.56	12.56	33.41	13.02	33.32	13.26	33.23	13.49	33.04	13.97
	-13.7	-15	35.31	12.48	35.13	12.95	34.93	13.42	34.82	13.66	34.70	13.90	34.45	14.38
	-11.8	-13	37.02	12.80	36.80	13.26	36.54	13.74	36.41	13.98	36.27	14.22	35.98	14.71
	-9.8	-11	38.81	13.14	38.54	13.61	38.24	14.09	38.09	14.33	37.92	14.57	38.08	15.22
	-9.5	-10	39.73	13.26	39.44	13.73	39.12	14.20	38.96	14.44	38.78	14.69	38.08	14.82
	-8.5	-9.1	40.57	13.44	40.27	13.91	39.93	14.39	39.76	14.63	39.58	14.87	38.08	14.54
	-7	-7.6	42.01	13.73	41.68	14.20	41.31	14.68	41.12	14.93	41.54	15.36	38.08	13.98
	-5	-5.6	43.98	14.14	43.61	14.61	43.21	15.10	43.27	15.29	41.54	14.60	38.08	13.20
	-3	-3.7	45.91	14.35	45.51	14.83	45.00	15.02	43.27	14.35	41.54	13.67	38.08	12.27
	0	-0.7	49.05	14.71	48.46	14.83	45.00	13.54	43.27	12.88	41.54	12.21	38.08	10.94
	3	2.2	51.92	14.63	48.46	13.38	45.00	12.12	43.27	11.49	41.54	10.92	38.08	9.91
	5	4.1	51.92	13.67	48.46	12.47	45.00	11.24	43.27	10.72	41.54	10.23	38.08	9.28
	7	6	51.92	12.75	48.46	11.57	45.00	10.46	43.27	9.95	41.54	9.46	38.08	8.49
	9	7.9	51.92	11.83	48.46	10.66	45.00	9.73	43.27	9.28	41.54	8.88	38.08	7.97
	11	9.8	51.92	10.92	48.46	10.03	45.00	9.10	43.27	8.67	41.54	8.23	38.08	7.39
	13	11.8	51.92	10.13	48.46	9.31	45.00	8.45	43.27	8.04	41.54	7.64	38.08	6.84
	15	13.7	51.92	9.47	48.46	8.69	45.00	7.86	43.27	7.52	41.54	7.11	38.08	6.39
80%	-25	-25.4	27.51	11.42	27.66	11.89	27.77	12.36	27.83	12.60	27.88	12.84	27.98	13.32
	-19.8	-20	30.84	11.94	30.79	12.40	30.71	12.87	30.66	13.10	30.61	13.34	30.51	13.82
	-18.8	-19	31.55	12.07	31.47	12.53	31.36	13.00	31.30	13.23	31.23	13.47	31.10	13.94
	-16.7	-17	33.05	12.36	32.91	12.82	32.75	13.29	32.66	13.52	32.56	13.76	32.37	14.24
	-13.7	-15	34.65	12.76	34.46	13.22	34.24	13.70	34.12	13.94	34.00	14.18	33.85	14.65
	-11.8	-13	36.34	13.09	36.09	13.56	35.83	14.03	35.69	14.27	35.54	14.51	33.85	14.13
	-9.8	-11	38.10	13.45	37.81	13.92	37.50	14.40	37.34	14.64	36.92	14.61	33.85	13.50
	-9.5	-10	39.00	13.57	38.70	14.04	38.37	14.52	38.46	14.77	36.92	14.22	33.85	13.07
	-8.5	-9.1	39.84	13.76	39.51	14.23	40.00	15.03	38.46	14.49	36.92	13.92	33.85	12.75
	-7	-7.6	41.25	14.07	40.90	14.54	40.00	14.53	38.46	13.96	36.92	13.38	33.85	12.17
	-5	-5.6	43.20	14.49	43.08	14.92	40.00	13.79	38.46	13.19	36.92	12.60	33.85	11.37
	-3	-3.7	45.10	14.72	43.08	14.01	40.00	12.88	38.46	12.29	36.92	11.70	33.85	10.60
	0	-0.7	46.15	13.66	43.08	12.57	40.00	11.45	38.46	10.92	36.92	10.45	33.85	9.52
	3	2.2	46.15	12.27	43.08	11.22	40.00	10.30	38.46	9.87	36.92	9.45	33.85	8.61
	5	4.1	46.15	11.40	43.08	10.45	40.00	9.64	38.46	9.24	36.92	8.85	33.85	8.07
	7	6	46.15	10.56	43.08	9.72	40.00	8.87	38.46	8.45	36.92	8.04	33.85	7.25
	9	7.9	46.15	9.78	43.08	9.01	40.00	8.26	38.46	7.90	36.92	7.54	33.85	6.82
	11	9.8	46.15	9.15	43.08	8.40	40.00	7.72	38.46	7.33	36.92	6.99	33.85	6.34
	13	11.8	46.15	8.48	43.08	7.79	40.00	7.12	38.46	6.78	36.92	6.44	33.85	5.96
	15	13.7	46.15	7.90	43.08	7.25	40.00	6.57	38.46	6.27	36.92	6.06	33.85	5.61

Abbreviations:
CR: Combination ratio
TC: Total capacity (kW)
PI: Power input (compressor + outdoor fan motor) (kW)

Notes:
Shaded cells indicate rating condition.

Table 2-9.11: 16HP heating capacity (continued)

Combination (%) (Capacity index)	Outdoor air temp.		Indoor air temp. °C DB											
			16		18		20		21		22		24	
			TC	PI	TC	PI	TC	PI	TC	PI	TC	PI	TC	PI
	°C DB	°C WB	kW	kW	kW	kW	kW	kW	kW	kW	kW	kW	kW	kW
70%	-25	-25.4	27.10	11.70	27.23	12.17	27.34	12.65	27.39	12.88	27.45	13.12	27.56	13.61
	-19.8	-20	30.32	12.25	30.25	12.71	30.16	13.18	30.12	13.42	30.06	13.65	29.62	14.00
	-18.8	-19	31.02	12.39	30.92	12.85	30.80	13.32	30.73	13.55	30.67	13.79	29.62	13.85
	-16.7	-17	32.49	12.69	32.33	13.15	32.15	13.62	32.06	13.86	32.31	14.24	29.62	13.48
	-13.7	-15	34.05	13.11	33.84	13.58	33.61	14.06	33.65	14.32	32.31	13.92	29.62	13.07
	-11.8	-13	35.70	13.46	35.44	13.93	35.00	14.23	33.65	13.81	32.31	13.37	29.62	12.44
	-9.8	-11	37.42	13.85	37.69	14.52	35.00	13.64	33.65	13.19	32.31	12.72	29.62	11.72
	-9.5	-10	38.31	13.98	37.69	14.14	35.00	13.25	33.65	12.78	32.31	12.29	29.62	11.28
	-8.5	-9.1	39.13	14.18	37.69	13.86	35.00	12.94	33.65	12.46	32.31	11.97	29.62	10.94
	-7	-7.6	40.38	14.24	37.69	13.35	35.00	12.39	33.65	11.90	32.31	11.39	29.62	10.40
	-5	-5.6	40.38	13.54	37.69	12.60	35.00	11.62	33.65	11.12	32.31	10.65	29.62	9.74
	-3	-3.7	40.38	12.64	37.69	11.72	35.00	10.77	33.65	10.34	32.31	9.91	29.62	9.07
	0	-0.7	40.38	11.28	37.69	10.42	35.00	9.64	33.65	9.26	32.31	8.88	29.62	8.14
	3	2.2	40.38	10.08	37.69	9.38	35.00	8.69	33.65	8.35	32.31	8.03	29.62	7.38
	5	4.1	40.38	9.41	37.69	8.77	35.00	8.14	33.65	7.82	32.31	7.51	29.62	6.90
	7	6	40.38	8.69	37.69	7.99	35.00	7.33	33.65	7.00	32.31	6.72	29.62	6.17
	9	7.9	40.38	8.04	37.69	7.45	35.00	6.87	33.65	6.56	32.31	6.29	29.62	5.88
	11	9.8	40.38	7.48	37.69	6.91	35.00	6.33	33.65	6.12	32.31	5.93	29.62	5.55
	13	11.8	40.38	6.90	37.69	6.35	35.00	5.92	33.65	5.74	32.31	5.56	29.62	5.21
	15	13.7	40.38	6.37	37.69	5.93	35.00	5.58	33.65	5.42	32.31	5.23	29.62	4.88
60%	-25	-25.4	26.81	12.08	26.92	12.55	27.03	13.03	27.09	13.27	27.69	13.79	25.38	13.38
	-19.8	-20	29.88	12.67	29.80	13.13	30.00	13.74	28.85	13.49	27.69	13.23	25.38	12.67
	-18.8	-19	30.55	12.81	30.44	13.28	30.00	13.60	28.85	13.34	27.69	13.06	25.38	12.46
	-16.7	-17	31.97	13.14	32.31	13.82	30.00	13.25	28.85	12.95	27.69	12.63	25.38	11.96
	-13.7	-15	33.49	13.59	32.31	13.50	30.00	12.86	28.85	12.52	27.69	12.17	25.38	11.42
	-11.8	-13	34.62	13.62	32.31	12.96	30.00	12.25	28.85	11.89	27.69	11.50	25.38	10.69
	-9.8	-11	34.62	13.04	32.31	12.33	30.00	11.57	28.85	11.17	27.69	10.77	25.38	9.90
	-9.5	-10	34.62	12.65	32.31	11.93	30.00	11.15	28.85	10.74	27.69	10.32	25.38	9.49
	-8.5	-9.1	34.62	12.36	32.31	11.61	30.00	10.82	28.85	10.41	27.69	10.00	25.38	9.19
	-7	-7.6	34.62	11.83	32.31	11.05	30.00	10.25	28.85	9.86	27.69	9.48	25.38	8.73
	-5	-5.6	34.62	11.09	32.31	10.32	30.00	9.58	28.85	9.22	27.69	8.86	25.38	8.16
	-3	-3.7	34.62	10.26	32.31	9.56	30.00	8.90	28.85	8.56	27.69	8.24	25.38	7.59
	0	-0.7	34.62	9.13	32.31	8.54	30.00	7.95	28.85	7.66	27.69	7.37	25.38	6.96
	3	2.2	34.62	8.20	32.31	7.69	30.00	7.17	28.85	7.00	27.69	6.82	25.38	6.45
	5	4.1	34.62	7.66	32.31	7.18	30.00	6.81	28.85	6.54	27.69	6.27	25.38	5.74
	7	6	34.62	6.87	32.31	6.36	30.00	5.99	28.85	5.81	27.69	5.64	25.38	5.27
	9	7.9	34.62	6.38	32.31	5.99	30.00	5.68	28.85	5.53	27.69	5.38	25.38	5.07
	11	9.8	34.62	5.91	32.31	5.64	30.00	5.35	28.85	5.22	27.69	5.06	25.38	4.72
	13	11.8	34.62	5.55	32.31	5.29	30.00	5.03	28.85	4.90	27.69	4.74	25.38	4.41
	15	13.7	34.62	5.23	32.31	4.98	30.00	4.73	28.85	4.59	27.69	4.46	25.38	4.21
50%	-25	-25.4	26.65	12.62	26.92	13.21	25.00	12.93	24.04	12.79	23.08	12.63	21.15	12.30
	-19.8	-20	28.85	12.96	26.92	12.59	25.00	12.18	24.04	11.97	23.08	11.74	21.15	11.27
	-18.8	-19	28.85	12.80	26.92	12.40	25.00	11.97	24.04	11.74	23.08	11.50	21.15	10.99
	-16.7	-17	28.85	12.41	26.92	11.96	25.00	11.47	24.04	11.21	23.08	10.94	21.15	10.37
	-13.7	-15	28.85	12.00	26.92	11.49	25.00	10.93	24.04	10.64	23.08	10.34	21.15	9.60
	-11.8	-13	28.85	11.39	26.92	10.82	25.00	10.21	24.04	9.85	23.08	9.50	21.15	8.81
	-9.8	-11	28.85	10.71	26.92	10.08	25.00	9.40	24.04	9.07	23.08	8.75	21.15	8.12
	-9.5	-10	28.85	10.29	26.92	9.63	25.00	8.99	24.04	8.68	23.08	8.37	21.15	7.76
	-8.5	-9.1	28.85	9.94	26.92	9.30	25.00	8.68	24.04	8.38	23.08	8.09	21.15	7.51
	-7	-7.6	28.85	9.39	26.92	8.79	25.00	8.21	24.04	7.94	23.08	7.65	21.15	7.16
	-5	-5.6	28.85	8.72	26.92	8.18	25.00	7.66	24.04	7.40	23.08	7.20	21.15	6.81
	-3	-3.7	28.85	8.07	26.92	7.58	25.00	7.15	24.04	6.98	23.08	6.81	21.15	6.45
	0	-0.7	28.85	7.18	26.92	6.86	25.00	6.58	24.04	6.43	23.08	6.28	21.15	5.96
	3	2.2	28.85	6.59	26.92	6.35	25.00	6.10	24.04	5.97	23.08	5.83	21.15	5.55
	5	4.1	28.85	6.15	26.92	5.84	25.00	5.41	24.04	5.22	23.08	5.03	21.15	4.74
	7	6	28.85	5.44	26.92	5.21	25.00	4.95	24.04	4.82	23.08	4.69	21.15	4.41
	9	7.9	28.85	5.16	26.92	4.95	25.00	4.74	24.04	4.61	23.08	4.46	21.15	4.16
	11	9.8	28.85	4.84	26.92	4.66	25.00	4.42	24.04	4.30	23.08	4.17	21.15	3.90
	13	11.8	28.85	4.55	26.92	4.35	25.00	4.14	24.04	4.03	23.08	3.91	21.15	3.67
	15	13.7	28.85	4.27	26.92	4.10	25.00	3.93	24.04	3.82	23.08	3.71	21.15	3.49

Abbreviations:
CR: Combination ratio
TC: Total capacity (kW)
PI: Power input (compressor + outdoor fan motor) (kW)

Notes:

Shaded cells indicate rating condition.

Table 2-9.12: 18HP heating capacity

Combination (%) (Capacity index)	Outdoor air temp.		Indoor air temp. °C DB											
			16		18		20		21		22		24	
			TC	PI	TC	PI	TC	PI	TC	PI	TC	PI	TC	PI
	°C DB	°C WB	kW	kW	kW	kW	kW	kW	kW	kW	kW	kW	kW	kW
130%	-25	-25.4	37.67	12.00	38.02	12.56	38.32	13.11	39.39	13.64	38.59	13.66	37.91	13.94
	-19.8	-20	40.39	12.41	40.48	12.96	40.51	13.50	40.50	13.77	40.49	14.03	40.44	14.57
	-18.8	-19	40.84	12.46	40.89	13.01	40.87	13.55	40.85	13.81	40.81	14.08	40.72	14.61
	-16.7	-17	41.92	12.63	41.90	13.17	41.82	13.70	41.76	13.97	41.68	14.23	41.52	14.76
	-13.7	-15	43.22	12.93	43.14	13.47	43.00	14.00	42.90	14.27	42.80	14.54	42.57	15.07
	-11.8	-13	44.71	13.17	44.57	13.71	44.37	14.24	44.25	14.51	44.12	14.77	43.83	15.31
	-9.8	-11	46.35	13.47	46.17	14.00	45.92	14.53	45.77	14.79	45.62	15.06	45.28	15.60
	-9.5	-10	47.22	13.56	47.02	14.08	46.75	14.61	46.59	14.88	46.42	15.14	46.06	15.68
	-8.5	-9.1	48.03	13.72	47.81	14.24	47.52	14.77	47.35	15.04	47.18	15.30	46.80	15.84
	-7	-7.6	49.44	13.98	49.18	14.51	48.86	15.03	48.68	15.30	48.49	15.57	48.08	16.10
	-5	-5.6	51.41	14.35	51.12	14.88	50.76	15.41	50.56	15.68	50.35	15.94	49.90	16.49
	-3	-3.7	53.37	14.54	53.04	15.06	52.65	15.59	52.43	15.85	52.21	16.11	51.73	16.65
	0	-0.7	56.61	14.87	56.23	15.38	55.80	15.89	55.56	16.15	55.31	16.42	54.78	16.95
	3	2.2	59.41	14.96	59.00	15.45	58.53	15.95	58.27	16.21	58.01	16.46	57.45	16.99
	5	4.1	59.59	14.17	59.18	14.63	58.72	15.09	58.47	15.33	58.21	15.57	57.67	16.06
	7	6	61.29	14.11	60.86	14.56	60.39	15.02	60.13	15.25	59.86	15.48	59.30	15.97
	9	7.9	63.54	14.31	63.09	14.76	62.59	15.21	62.33	15.44	62.05	15.68	61.60	15.86
	11	9.8	65.82	14.51	65.35	14.96	64.84	15.41	64.56	15.64	64.27	15.88	61.60	14.82
	13	11.8	68.26	14.72	67.78	15.16	67.24	15.62	66.95	15.85	67.20	15.99	61.60	13.75
	15	13.7	70.61	14.92	70.11	15.36	69.55	15.81	70.00	16.03	67.20	14.93	61.60	12.76
120%	-25	-25.4	36.70	12.12	37.04	12.68	38.27	13.49	37.47	13.51	37.60	13.78	37.86	14.33
	-19.8	-20	39.37	12.54	39.44	13.09	39.46	13.63	39.45	13.90	39.43	14.16	39.38	14.70
	-18.8	-19	39.81	12.60	39.84	13.14	39.82	13.68	39.79	13.94	39.75	14.21	39.65	14.75
	-16.7	-17	40.88	12.77	40.84	13.30	40.75	13.83	40.68	14.10	40.60	14.36	40.43	14.90
	-13.7	-15	42.17	13.07	42.07	13.61	41.91	14.14	41.81	14.41	41.70	14.67	41.46	15.21
	-11.8	-13	43.64	13.32	43.49	13.85	43.27	14.38	43.15	14.65	43.01	14.91	42.71	15.45
	-9.8	-11	45.27	13.62	45.07	14.15	44.80	14.68	44.65	14.94	44.49	15.21	44.15	15.75
	-9.5	-10	46.13	13.71	45.91	14.24	45.62	14.76	45.46	15.03	45.29	15.29	44.92	15.83
	-8.5	-9.1	46.94	13.87	46.70	14.40	46.39	14.93	46.22	15.19	46.04	15.46	45.65	15.99
	-7	-7.6	48.34	14.14	48.06	14.67	47.73	15.19	47.54	15.46	47.35	15.73	46.93	16.27
	-5	-5.6	50.30	14.52	49.98	15.05	49.61	15.58	49.40	15.84	49.19	16.11	48.73	16.66
	-3	-3.7	52.24	14.72	51.90	15.24	51.49	15.76	51.27	16.02	51.04	16.29	50.55	16.83
	0	-0.7	55.47	15.05	55.08	15.56	54.62	16.08	54.38	16.34	54.12	16.60	53.59	17.14
	3	2.2	58.26	15.15	57.83	15.64	57.34	16.14	57.08	16.40	56.81	16.65	56.86	17.21
	5	4.1	58.44	14.34	58.01	14.80	57.54	15.27	57.28	15.51	57.01	15.75	56.86	16.13
	7	6	60.13	14.29	59.69	14.74	59.19	15.19	58.93	15.43	58.66	15.67	56.86	15.10
	9	7.9	62.37	14.49	61.91	14.94	61.39	15.40	61.12	15.63	62.03	16.18	56.86	14.07
	11	9.8	64.65	14.70	64.16	15.15	63.63	15.60	64.62	16.16	62.03	15.13	56.86	13.09
	13	11.8	67.08	14.92	66.57	15.36	67.20	16.06	64.62	15.06	62.03	14.05	56.86	12.08
	15	13.7	69.42	15.12	68.90	15.57	67.20	15.02	64.62	14.03	62.03	13.06	56.86	11.21
110%	-25	-25.4	35.84	12.27	37.08	13.08	36.45	13.38	35.68	13.39	35.79	13.66	36.98	14.48
	-19.8	-20	38.44	12.70	38.50	13.24	38.51	13.78	38.49	14.05	38.47	14.32	38.41	14.86
	-18.8	-19	38.87	12.76	38.89	13.30	38.85	13.83	38.82	14.10	38.77	14.37	38.67	14.90
	-16.7	-17	39.93	12.93	39.87	13.46	39.76	13.99	39.69	14.26	39.61	14.52	39.43	15.05
	-13.7	-15	41.20	13.24	41.08	13.77	40.90	14.31	40.80	14.57	40.69	14.84	40.44	15.37
	-11.8	-13	42.65	13.49	42.48	14.02	42.25	14.55	42.12	14.82	41.98	15.08	41.67	15.62
	-9.8	-11	44.27	13.80	44.04	14.32	43.76	14.85	43.61	15.12	43.44	15.38	43.09	15.92
	-9.5	-10	45.13	13.89	44.88	14.42	44.58	14.94	44.41	15.21	44.23	15.47	43.86	16.01
	-8.5	-9.1	45.93	14.06	45.66	14.58	45.34	15.11	45.16	15.37	44.97	15.64	44.58	16.18
	-7	-7.6	47.32	14.33	47.02	14.86	46.66	15.38	46.47	15.65	46.27	15.92	45.84	16.46
	-5	-5.6	49.26	14.72	48.92	15.25	48.53	15.78	48.32	16.04	48.10	16.31	47.63	16.86
	-3	-3.7	51.19	14.92	50.82	15.44	50.40	15.96	50.17	16.23	49.93	16.50	49.44	17.04
	0	-0.7	54.40	15.27	53.98	15.78	53.51	16.29	53.26	16.56	53.00	16.82	52.12	16.83
	3	2.2	57.17	15.37	56.71	15.86	56.21	16.37	55.94	16.62	55.66	16.88	52.12	15.25
	5	4.1	57.36	14.55	56.91	15.01	56.41	15.48	56.15	15.72	56.86	16.20	52.12	14.25
	7	6	59.04	14.49	58.57	14.95	58.06	15.41	57.79	15.64	56.86	15.16	52.12	13.26
	9	7.9	61.27	14.71	60.78	15.16	60.25	15.62	59.23	15.08	56.86	14.15	52.12	12.34
	11	9.8	63.53	14.92	63.02	15.37	61.60	14.98	59.23	14.09	56.86	13.18	52.12	11.40
	13	11.8	65.95	15.15	66.34	15.69	61.60	13.93	59.23	13.05	56.86	12.16	52.12	10.63
	15	13.7	68.29	15.36	66.34	14.66	61.60	12.92	59.23	12.08	56.86	11.23	52.12	10.00

Abbreviations:
CR: Combination ratio
TC: Total capacity (kW)
PI: Power input (compressor + outdoor fan motor) (kW)

Notes:
Shaded cells indicate rating condition.

Table 2-9 12: 18HP heating capacity (continued)

Combination (%) (Capacity index)	Outdoor air temp.		Indoor air temp. °C DB											
			16		18		20		21		22		24	
			TC	PI	TC	PI	TC	PI	TC	PI	TC	PI	TC	PI
	°C DB	°C WB	kW	kW	kW	kW	kW	kW	kW	kW	kW	kW	kW	kW
100%	-25	-25.4	35.99	12.70	35.40	13.01	34.77	13.29	34.89	13.56	35.95	14.11	35.24	14.38
	-19.8	-20	37.61	12.89	37.65	13.43	37.64	13.97	37.62	14.23	37.60	14.50	37.54	15.04
	-18.8	-19	38.03	12.95	38.03	13.48	37.97	14.02	37.93	14.28	37.89	14.55	37.78	15.09
	-16.7	-17	39.06	13.12	38.98	13.65	38.85	14.18	38.78	14.45	38.69	14.71	38.51	15.25
	-13.7	-15	40.31	13.44	40.17	13.97	39.98	14.50	39.87	14.77	39.75	15.03	39.50	15.57
	-11.8	-13	41.75	13.70	41.55	14.23	41.30	14.76	41.16	15.02	41.02	15.29	40.71	15.83
	-9.8	-11	43.34	14.01	43.10	14.54	42.80	15.06	42.64	15.33	42.46	15.60	42.10	16.14
	-9.5	-10	44.19	14.11	43.92	14.63	43.60	15.16	43.43	15.42	43.24	15.69	42.86	16.23
	-8.5	-9.1	44.98	14.28	44.69	14.80	44.36	15.33	44.17	15.59	43.98	15.86	43.58	16.40
	-7	-7.6	46.36	14.56	46.04	15.08	45.67	15.61	45.47	15.88	45.26	16.14	44.83	16.69
	-5	-5.6	48.29	14.96	47.93	15.49	47.51	16.01	47.30	16.28	47.07	16.55	47.38	17.34
	-3	-3.7	50.20	15.17	49.81	15.69	49.37	16.21	49.13	16.48	48.89	16.74	47.38	16.38
	0	-0.7	53.39	15.53	52.94	16.04	52.45	16.55	52.19	16.82	51.69	16.63	47.38	14.81
	3	2.2	56.13	15.63	55.65	16.13	56.00	16.83	53.85	15.95	51.69	15.07	47.38	13.33
	5	4.1	56.33	14.79	55.85	15.26	56.00	15.79	53.85	14.93	51.69	14.09	47.38	12.39
	7	6	58.00	14.74	57.51	15.20	56.00	14.77	53.85	13.94	51.69	13.11	47.38	11.49
	9	7.9	60.21	14.97	60.31	15.40	56.00	13.79	53.85	12.98	51.69	12.18	47.38	10.68
	11	9.8	62.47	15.19	60.31	14.39	56.00	12.84	53.85	12.04	51.69	11.27	47.38	10.00
	13	11.8	64.62	14.92	60.31	13.35	56.00	11.82	53.85	11.08	51.69	10.49	47.38	9.32
	15	13.7	64.62	13.90	60.31	12.38	56.00	10.93	53.85	10.38	51.69	9.85	47.38	8.73
90%	-25	-25.4	34.45	12.67	35.71	13.51	35.03	13.78	34.21	13.77	34.33	14.05	34.58	14.59
	-19.8	-20	36.88	13.12	36.89	13.66	36.87	14.19	36.85	14.46	36.82	14.73	36.76	15.27
	-18.8	-19	37.28	13.18	37.25	13.71	37.18	14.25	37.14	14.51	37.09	14.78	36.98	15.32
	-16.7	-17	38.28	13.36	38.18	13.89	38.03	14.41	37.95	14.68	37.86	14.95	37.67	15.48
	-13.7	-15	39.50	13.68	39.34	14.21	39.13	14.74	39.01	15.01	38.89	15.28	38.63	15.81
	-11.8	-13	40.91	13.95	40.69	14.48	40.43	15.00	40.28	15.27	40.13	15.54	39.82	16.08
	-9.8	-11	42.49	14.27	42.21	14.79	41.90	15.32	41.73	15.59	41.55	15.86	41.19	16.40
	-9.5	-10	43.32	14.37	43.03	14.89	42.69	15.42	42.51	15.69	42.32	15.95	42.65	16.75
	-8.5	-9.1	44.11	14.55	43.79	15.07	43.43	15.60	43.24	15.86	43.05	16.13	42.65	16.50
	-7	-7.6	45.47	14.84	45.12	15.36	44.73	15.89	44.52	16.16	44.31	16.42	42.65	16.02
	-5	-5.6	47.37	15.25	46.98	15.78	46.56	16.31	46.33	16.58	46.52	16.87	42.65	15.27
	-3	-3.7	49.27	15.47	48.85	15.99	48.38	16.51	48.46	16.72	46.52	15.93	42.65	14.33
	0	-0.7	52.42	15.84	51.95	16.35	50.40	15.94	48.46	15.17	46.52	14.38	42.65	12.82
	3	2.2	55.14	15.96	54.28	15.93	50.40	14.43	48.46	13.68	46.52	12.93	42.65	11.43
	5	4.1	55.34	15.10	54.28	14.92	50.40	13.46	48.46	12.74	46.52	12.03	42.65	10.71
	7	6	58.15	15.36	54.28	13.95	50.40	12.54	48.46	11.83	46.52	11.14	42.65	9.95
	9	7.9	58.15	14.37	54.28	12.99	50.40	11.65	48.46	10.94	46.52	10.36	42.65	9.28
	11	9.8	58.15	13.41	54.28	12.07	50.40	10.75	48.46	10.22	46.52	9.70	42.65	8.67
	13	11.8	58.15	12.40	54.28	11.08	50.40	10.03	48.46	9.53	46.52	9.03	42.65	8.06
	15	13.7	58.15	11.45	54.28	10.33	50.40	9.42	48.46	8.92	46.52	8.43	42.65	7.49
80%	-25	-25.4	34.89	13.23	34.23	13.51	33.55	13.77	33.67	14.04	33.79	14.32	33.27	14.62
	-19.8	-20	36.24	13.41	36.23	13.94	36.20	14.48	36.17	14.75	36.14	15.02	36.08	15.57
	-18.8	-19	36.61	13.47	36.57	14.00	36.49	14.53	36.44	14.80	36.38	15.07	36.28	15.61
	-16.7	-17	37.57	13.65	37.45	14.18	37.29	14.71	37.20	14.97	37.11	15.24	36.92	15.78
	-13.7	-15	38.77	13.99	38.58	14.51	38.35	15.04	38.23	15.31	38.10	15.58	37.91	16.09
	-11.8	-13	40.15	14.26	39.90	14.79	39.62	15.32	39.47	15.58	39.31	15.85	37.91	15.71
	-9.8	-11	41.69	14.59	41.39	15.12	41.06	15.65	40.88	15.91	41.35	16.42	37.91	15.19
	-9.5	-10	42.51	14.70	42.19	15.22	41.84	15.75	41.65	16.01	41.35	16.07	37.91	14.80
	-8.5	-9.1	43.28	14.88	42.94	15.41	42.57	15.93	43.08	16.44	41.35	15.83	37.91	14.52
	-7	-7.6	44.62	15.19	44.25	15.71	43.84	16.24	43.08	15.98	41.35	15.33	37.91	13.97
	-5	-5.6	46.50	15.62	46.08	16.14	44.80	15.92	43.08	15.27	41.35	14.59	37.91	13.20
	-3	-3.7	48.37	15.84	48.25	16.31	44.80	15.00	43.08	14.34	41.35	13.65	37.91	12.27
	0	-0.7	51.69	16.08	48.25	14.81	44.80	13.51	43.08	12.85	41.35	12.21	37.91	10.93
	3	2.2	51.69	14.61	48.25	13.37	44.80	12.12	43.08	11.49	41.35	10.90	37.91	9.89
	5	4.1	51.69	13.66	48.25	12.45	44.80	11.23	43.08	10.70	41.35	10.22	37.91	9.27
	7	6	51.69	12.73	48.25	11.56	44.80	10.44	43.08	9.93	41.35	9.43	37.91	8.46
	9	7.9	51.69	11.81	48.25	10.65	44.80	9.72	43.08	9.27	41.35	8.86	37.91	7.95
	11	9.8	51.69	10.91	48.25	10.02	44.80	9.07	43.08	8.64	41.35	8.22	37.91	7.37
	13	11.8	51.69	10.12	48.25	9.29	44.80	8.44	43.08	8.01	41.35	7.62	37.91	6.82
	15	13.7	51.69	9.46	48.25	8.66	44.80	7.84	43.08	7.48	41.35	7.07	37.91	6.36

Abbreviations:
CR: Combination ratio
TC: Total capacity (kW)
PI: Power input (compressor + outdoor fan motor) (kW)

Notes:

Shaded cells indicate rating condition.

Table 2-9.12: 18HP heating capacity (continued)

Combination (%) (Capacity index)	Outdoor air temp.		Indoor air temp. °C DB											
			16		18		20		21		22		24	
			TC	PI	TC	PI	TC	PI	TC	PI	TC	PI	TC	PI
	°C DB	°C WB	kW	kW	kW	kW	kW	kW	kW	kW	kW	kW	kW	kW
70%	-25	-25.4	32.65	13.02	32.91	13.57	32.59	13.94	32.70	14.21	32.63	14.42	33.17	15.16
	-19.8	-20	35.69	13.78	35.67	14.31	35.62	14.85	35.59	15.12	36.18	15.66	33.17	15.00
	-18.8	-19	36.04	13.84	35.97	14.37	35.88	14.90	35.83	15.17	36.18	15.62	33.17	14.92
	-16.7	-17	36.95	14.03	36.80	14.55	36.63	15.08	36.54	15.35	36.18	15.47	33.17	14.67
	-13.7	-15	38.10	14.38	37.88	14.90	37.64	15.43	37.69	15.73	36.18	15.30	33.17	14.39
	-11.8	-13	39.44	14.66	39.16	15.19	39.20	15.80	37.69	15.35	36.18	14.87	33.17	13.86
	-9.8	-11	40.94	15.01	40.62	15.53	39.20	15.33	37.69	14.84	36.18	14.31	33.17	13.22
	-9.5	-10	41.74	15.12	42.22	15.95	39.20	14.97	37.69	14.45	36.18	13.92	33.17	12.80
	-8.5	-9.1	42.50	15.31	42.22	15.72	39.20	14.71	37.69	14.18	36.18	13.63	33.17	12.49
	-7	-7.6	43.80	15.63	42.22	15.26	39.20	14.20	37.69	13.64	36.18	13.08	33.17	11.91
	-5	-5.6	45.23	15.61	42.22	14.56	39.20	13.47	37.69	12.90	36.18	12.31	33.17	11.13
	-3	-3.7	45.23	14.73	42.22	13.66	39.20	12.55	37.69	11.99	36.18	11.42	33.17	10.36
	0	-0.7	45.23	13.29	42.22	12.23	39.20	11.15	37.69	10.67	36.18	10.21	33.17	9.30
	3	2.2	45.23	11.93	42.22	10.90	39.20	10.04	37.69	9.63	36.18	9.22	33.17	8.41
	5	4.1	45.23	11.06	42.22	10.17	39.20	9.39	37.69	9.02	36.18	8.63	33.17	7.87
	7	6	45.23	10.27	42.22	9.43	39.20	8.62	37.69	8.22	36.18	7.82	33.17	7.05
	9	7.9	45.23	9.50	42.22	8.77	39.20	8.03	37.69	7.68	36.18	7.33	33.17	6.63
	11	9.8	45.23	8.93	42.22	8.17	39.20	7.47	37.69	7.13	36.18	6.80	33.17	6.21
	13	11.8	45.23	8.23	42.22	7.55	39.20	6.91	37.69	6.62	36.18	6.29	33.17	5.83
	15	13.7	45.23	7.65	42.22	7.04	39.20	6.38	37.69	6.12	36.18	5.91	33.17	5.48
60%	-25	-25.4	32.06	13.37	32.11	13.85	32.16	14.33	32.31	14.69	31.02	14.48	28.43	14.06
	-19.8	-20	35.25	14.27	35.21	14.81	33.60	14.72	32.31	14.46	31.02	14.18	28.43	13.58
	-18.8	-19	35.56	14.33	36.18	15.17	33.60	14.64	32.31	14.36	31.02	14.06	28.43	13.42
	-16.7	-17	36.40	14.53	36.18	15.01	33.60	14.41	32.31	14.09	31.02	13.75	28.43	13.02
	-13.7	-15	37.48	14.89	36.18	14.83	33.60	14.15	32.31	13.78	31.02	13.40	28.43	12.58
	-11.8	-13	38.77	15.11	36.18	14.40	33.60	13.65	32.31	13.24	31.02	12.82	28.43	11.93
	-9.8	-11	38.77	14.64	36.18	13.87	33.60	13.03	32.31	12.60	31.02	12.15	28.43	11.21
	-9.5	-10	38.77	14.29	36.18	13.49	33.60	12.64	32.31	12.19	31.02	11.73	28.43	10.76
	-8.5	-9.1	38.77	14.03	36.18	13.20	33.60	12.33	32.31	11.87	31.02	11.40	28.43	10.43
	-7	-7.6	38.77	13.54	36.18	12.68	33.60	11.78	32.31	11.31	31.02	10.82	28.43	9.91
	-5	-5.6	38.77	12.82	36.18	11.93	33.60	11.01	32.31	10.56	31.02	10.13	28.43	9.28
	-3	-3.7	38.77	11.95	36.18	11.06	33.60	10.21	32.31	9.82	31.02	9.41	28.43	8.63
	0	-0.7	38.77	10.61	36.18	9.85	33.60	9.14	32.31	8.77	31.02	8.43	28.43	7.74
	3	2.2	38.77	9.51	36.18	8.87	33.60	8.23	32.31	7.92	31.02	7.60	28.43	7.08
	5	4.1	38.77	8.89	36.18	8.28	33.60	7.70	32.31	7.41	31.02	7.14	28.43	6.52
	7	6	38.77	8.13	36.18	7.50	33.60	6.89	32.31	6.59	31.02	6.32	28.43	5.89
	9	7.9	38.77	7.55	36.18	6.99	33.60	6.43	32.31	6.18	31.02	6.01	28.43	5.64
	11	9.8	38.77	7.04	36.18	6.47	33.60	6.00	32.31	5.83	31.02	5.66	28.43	5.28
	13	11.8	38.77	6.43	36.18	5.97	33.60	5.64	32.31	5.49	31.02	5.30	28.43	4.96
	15	13.7	38.77	5.93	36.18	5.62	33.60	5.31	32.31	5.15	31.02	4.99	28.43	4.68
50%	-25	-25.4	32.31	14.17	30.15	13.87	28.00	13.57	26.92	13.42	25.85	13.25	23.69	12.88
	-19.8	-20	32.31	13.88	30.15	13.48	28.00	13.05	26.92	12.82	25.85	12.58	23.69	12.06
	-18.8	-19	32.31	13.77	30.15	13.35	28.00	12.88	26.92	12.64	25.85	12.38	23.69	11.82
	-16.7	-17	32.31	13.49	30.15	13.01	28.00	12.48	26.92	12.20	25.85	11.90	23.69	11.28
	-13.7	-15	32.31	13.19	30.15	12.63	28.00	12.04	26.92	11.72	25.85	11.40	23.69	10.70
	-11.8	-13	32.31	12.66	30.15	12.05	28.00	11.40	26.92	11.05	25.85	10.69	23.69	9.90
	-9.8	-11	32.31	12.05	30.15	11.39	28.00	10.69	26.92	10.31	25.85	9.91	23.69	9.14
	-9.5	-10	32.31	11.66	30.15	10.98	28.00	10.25	26.92	9.87	25.85	9.49	23.69	8.76
	-8.5	-9.1	32.31	11.35	30.15	10.66	28.00	9.92	26.92	9.54	25.85	9.18	23.69	8.48
	-7	-7.6	32.31	10.81	30.15	10.09	28.00	9.39	26.92	9.04	25.85	8.69	23.69	8.03
	-5	-5.6	32.31	10.07	30.15	9.40	28.00	8.75	26.92	8.44	25.85	8.12	23.69	7.49
	-3	-3.7	32.31	9.31	30.15	8.70	28.00	8.12	26.92	7.82	25.85	7.54	23.69	7.07
	0	-0.7	32.31	8.28	30.15	7.76	28.00	7.24	26.92	7.05	25.85	6.88	23.69	6.51
	3	2.2	32.31	7.44	30.15	6.97	28.00	6.68	26.92	6.53	25.85	6.37	23.69	6.04
	5	4.1	32.31	6.94	30.15	6.63	28.00	6.14	26.92	5.91	25.85	5.68	23.69	5.23
	7	6	32.31	6.12	30.15	5.81	28.00	5.52	26.92	5.37	25.85	5.21	23.69	4.89
	9	7.9	32.31	5.76	30.15	5.51	28.00	5.24	26.92	5.11	25.85	4.98	23.69	4.66
	11	9.8	32.31	5.42	30.15	5.20	28.00	4.94	26.92	4.82	25.85	4.67	23.69	4.35
	13	11.8	32.31	5.08	30.15	4.88	28.00	4.63	26.92	4.50	25.85	4.36	23.69	4.08
	15	13.7	32.31	4.78	30.15	4.57	28.00	4.36	26.92	4.24	25.85	4.14	23.69	3.88

Abbreviations:
CR: Combination ratio
TC: Total capacity (kW)
PI: Power input (compressor + outdoor fan motor) (kW)

Notes:

Shaded cells indicate rating condition.

9.3 Capacity Correction Factors for Piping Length and Level Difference

Figure 2-9.1: Rate of change in cooling capacity

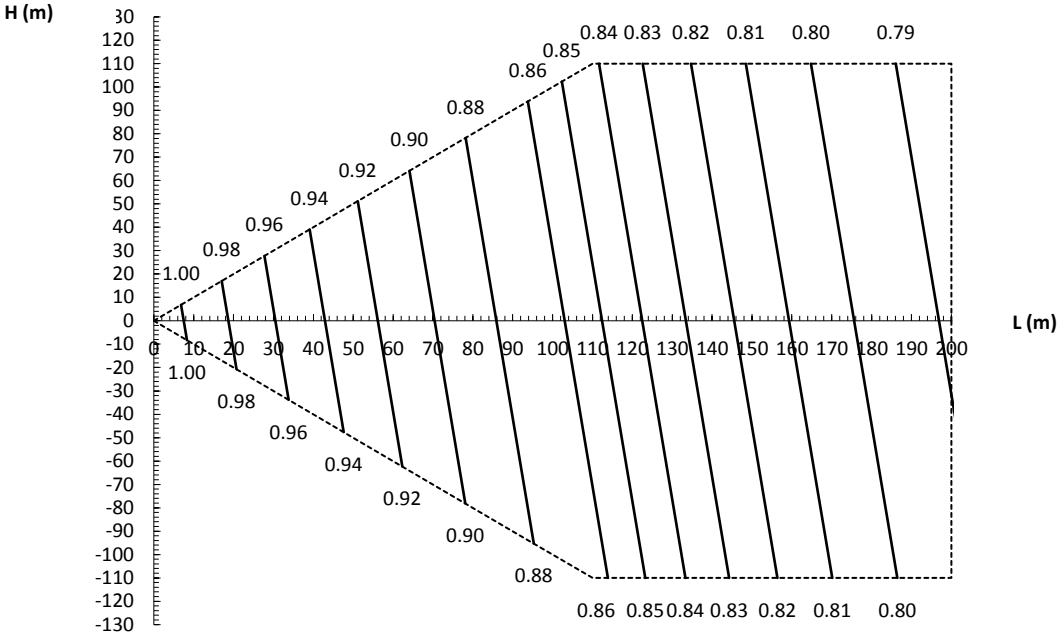

Figure 2-9.2: Rate of change in heating capacity

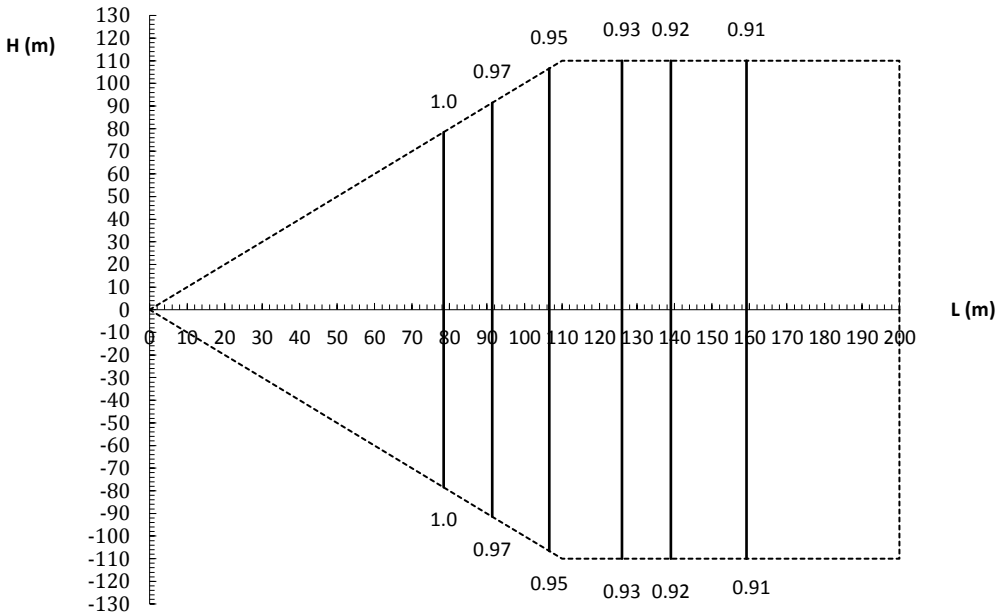

Notes:

1. The horizontal axis shows equivalent length of piping between farthest indoor unit and first outdoor branch joint; the vertical axis shows the largest level difference between indoor unit and outdoor unit. For level differences, positive values indicate that the outdoor unit is above the indoor unit, negative values indicate that the outdoor unit is below the indoor unit.
2. These figures illustrate the rate of change in capacity of a system with only standard indoor units at maximum load (with the thermostat set to maximum) under standard conditions. Under partial load conditions there is only a minor deviation from the rate of change in capacity shown in these figures.
3. The capacity of the system is either the total capacity of the indoor units obtained from indoor unit capacity tables or the corrected capacity of the outdoor units as per the calculations below, whichever is smaller.

Corrected capacity of outdoor units	=	Capacity of outdoor units obtained from outdoor unit capacity tables at the combination ratio	x	Capacity correction factor

9.3 Capacity Correction Factors for Frost Accumulation

The heating capacity tables do not take account of the reduction in capacity when frost has accumulated or while the defrosting operation is in progress. If snow has accumulated against the outside surface of the outdoor unit heat exchanger heating capacity is reduced. The reduction in heating capacity is dependent on a number of factors including the outdoor temperature, the relative humidity and the amount of frosting which has occurred.

Corrected heating capacity values, which take these factors into account, can be calculated as follows, using the correction factors for frost accumulation given in Table 2-9.13:

Corrected heating capacity = Value given in outdoor heating capacity table × Correction factor for frost accumulation

Table 2-9.13: Correction factor for frost accumulation

Heat exchanger inlet port temperature (°C / RH 85%)	-7	-5	-2	0	2	5	7
Correction factor for frost accumulation	0.94	0.93	0.89	0.84	0.83	0.91	1.00

Corrected heating capacities express the heating capacity over the heating/defrosting cycle shown in Figure 2-9.3.

Figure 2-9.3: Defrosting cycle

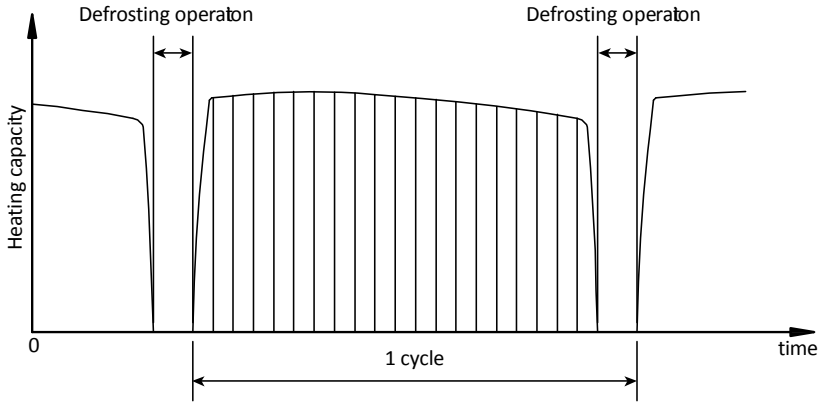

10 Operating Limits

Figure 2-10.1: Cooling operating limits

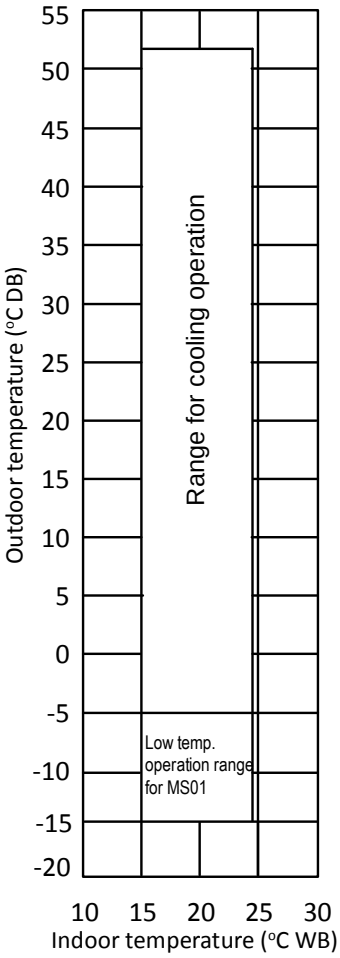

Figure 2-10.2: DHW operating limits

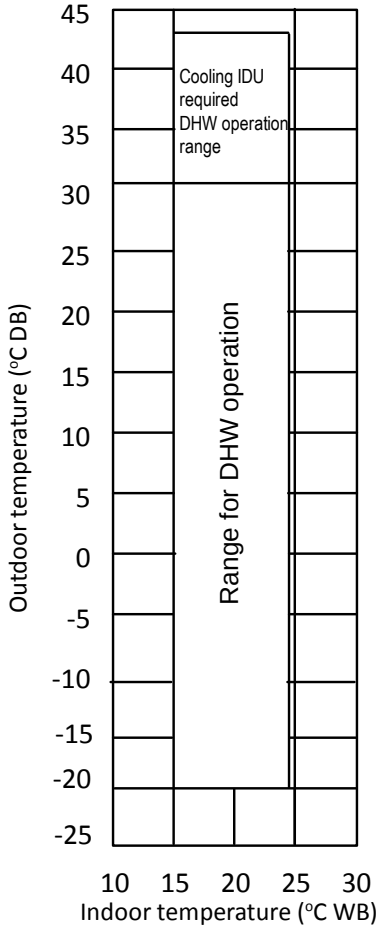

Figure 2-10.3: Heating operating limits

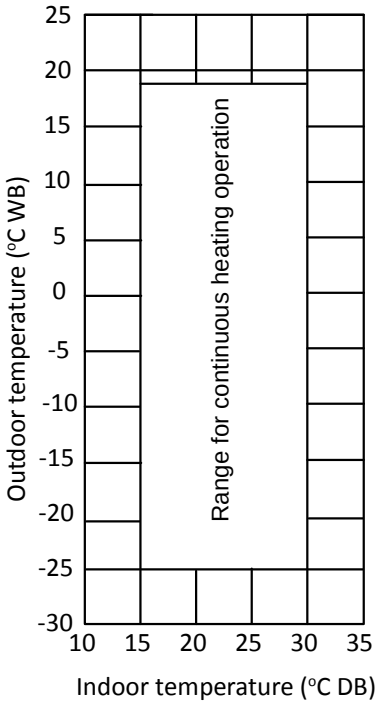

Notes:

1. These figures assume the following operating conditions:
   - Equivalent piping length: 7.5m
   - Level difference: 0

11 Sound Levels

11.1 Overall

Table 2-11.1: Sound pressure level

Model	dB(A)	Model	dB(A)	Model	dB(A)
8HP	58	24HP	63	40HP	67
10HP	58	26HP	64	42HP	67
12HP	60	28HP	65	44HP	68
14HP	61	30HP	66	46HP	68
16HP	64	32HP	67	48HP	69
18HP	65	34HP	68	50HP	69
20HP	61	36HP	68	52HP	69
22HP	62	38HP	65	54HP	70

Notes:

1. Sound pressure level is measured at a position 1m in front of the unit and 1.3m above the floor in a semi-anechoic chamber. During in-situ operation, sound pressure levels may be higher as a result of ambient noise.

Figure 2-11.1: Sound pressure level measurement (unit: mm)

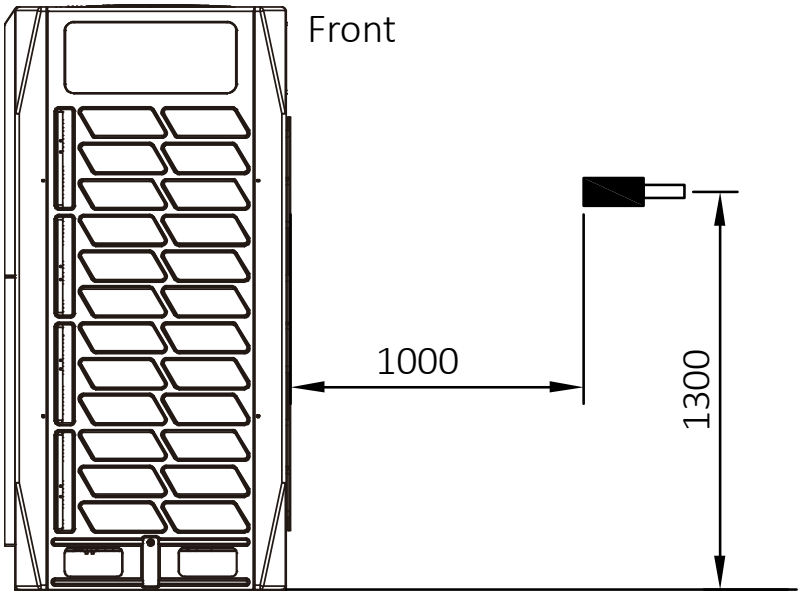

11.2 Octave Band Levels

Figure 2-11.2: 8HP octave band level

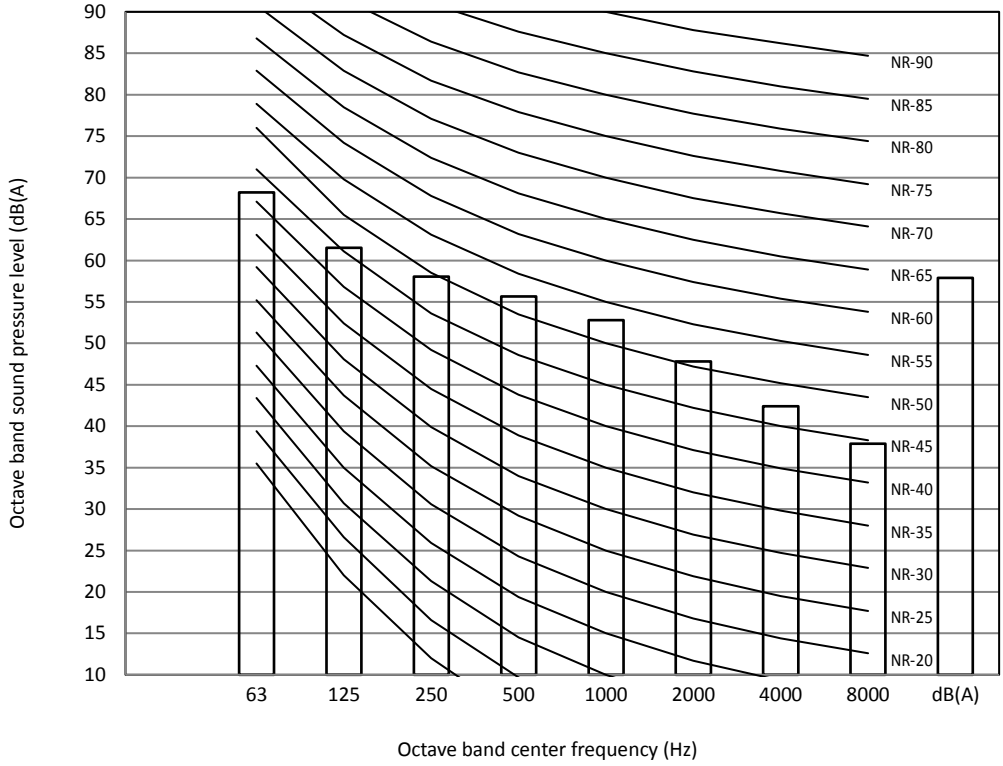

Figure 2-11.3: 10HP octave band level

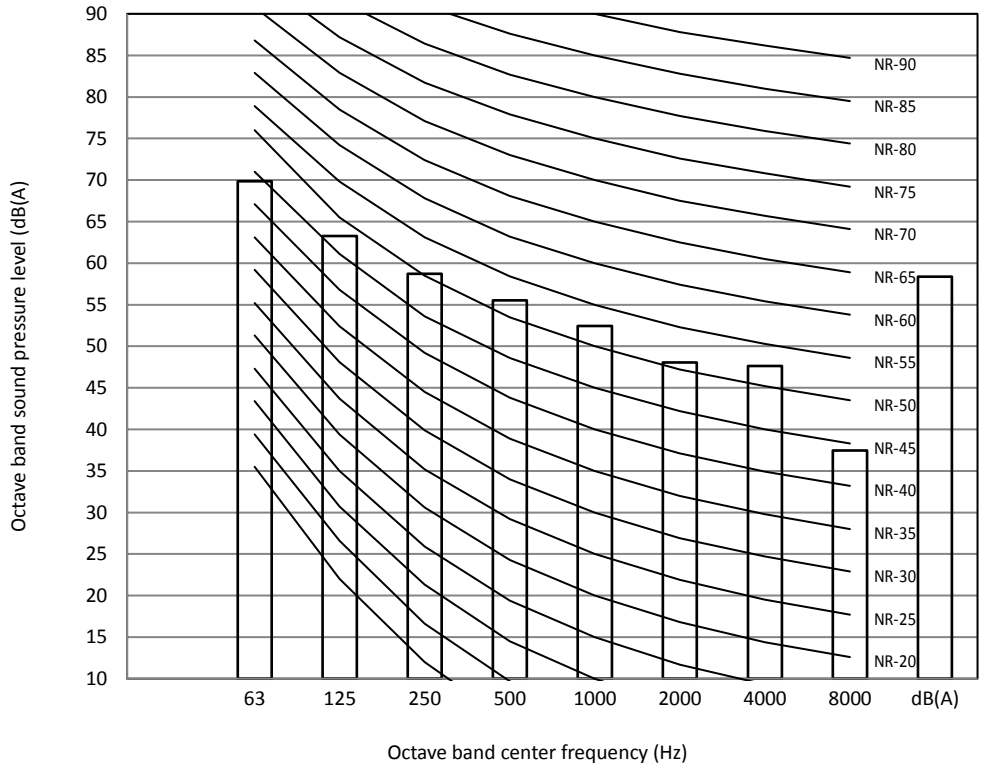

Figure 2-11.4: 12HP octave band level

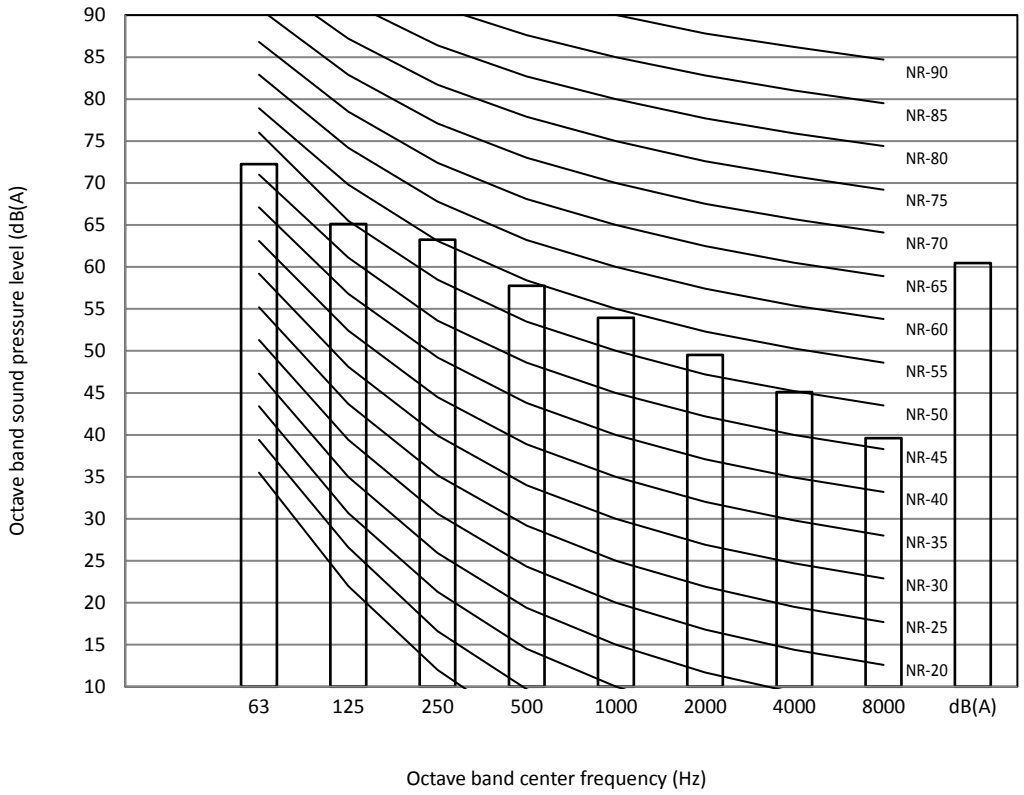

Figure 2-11.5: 14HP octave band level

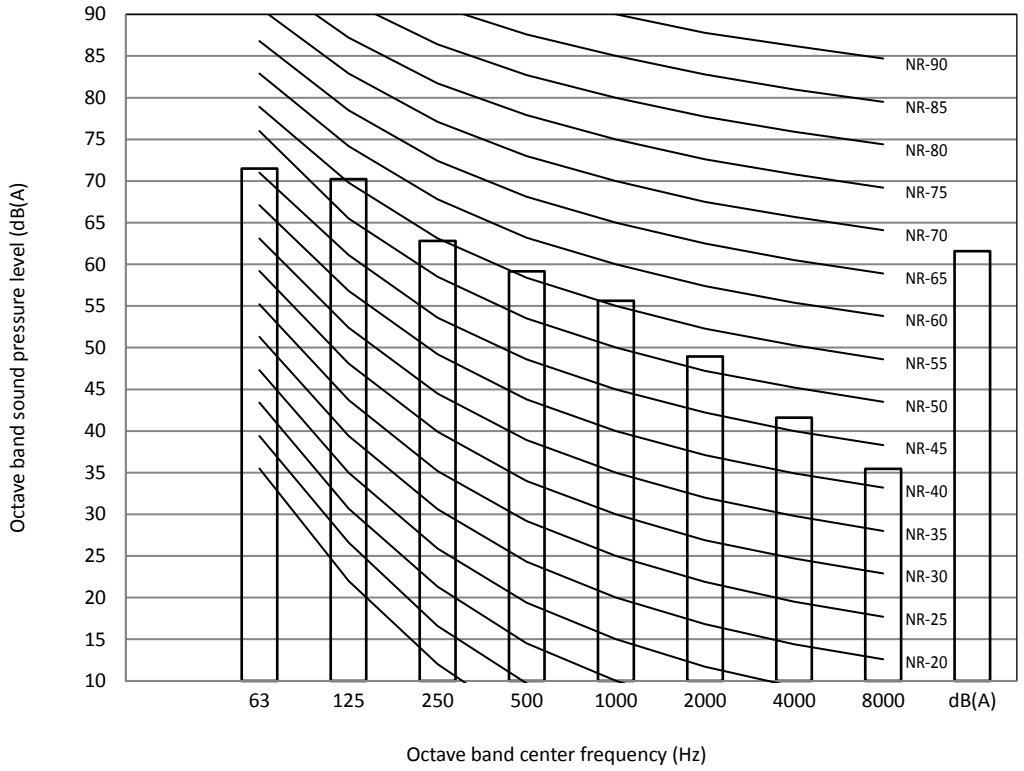

Figure 2-11.6: 16HP octave band level

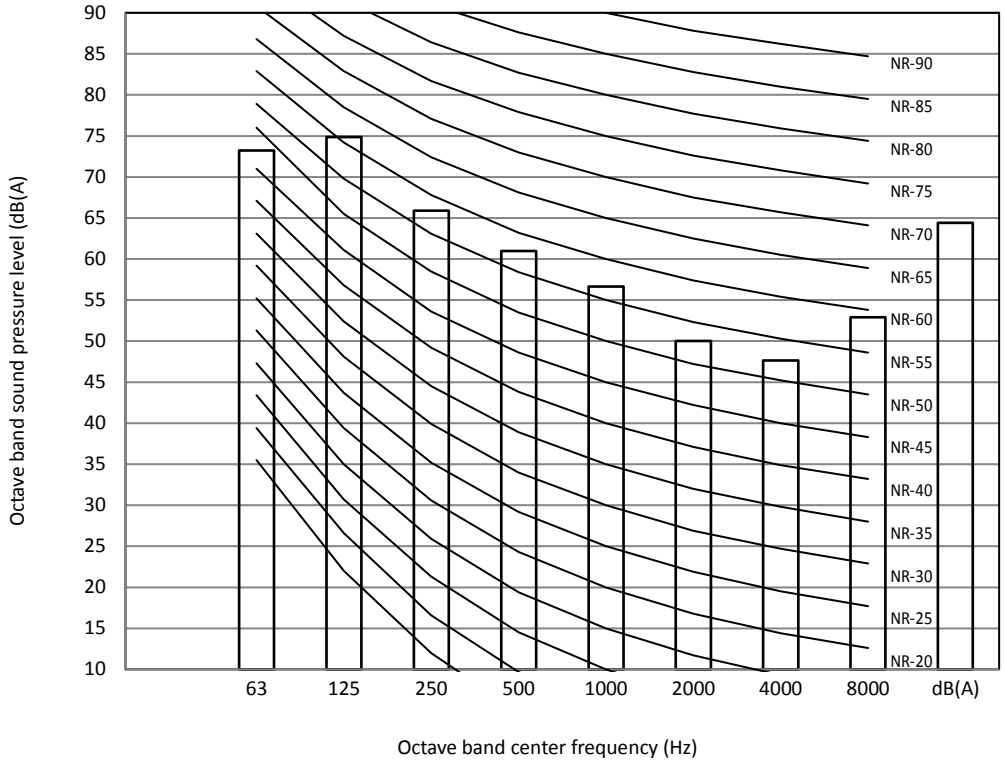

Figure 2-11.7: 18HP octave band level

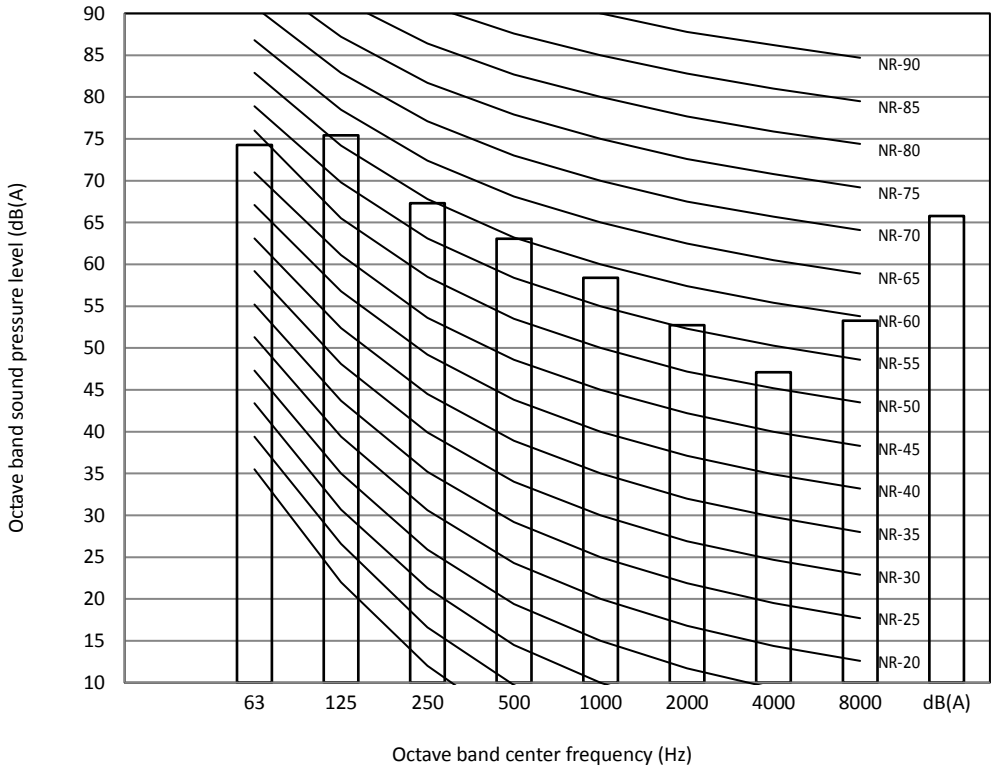

12 Accessories

12.1 Outdoor Unit Standard Accessories

Table 2-12.1: Outdoor unit standard accessories

Name	Shape	Quantity	Function
Installation manual		1	
Owner's manual		1	
Erp. information		1	
Tie wrap		2	
Screw pack	-	1	Reserved for maintenance
90° elbow		1	To connect piping (For 10-18HP)
Seal plug		8	To clean pipes
Connection pipe		3	To connect gas and liquid pipes
Matched resistor	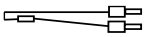	2	Enhances communication stability
Wrench		1	Removing side plate screws

12.2 Mode Selection Box Standard Accessories

Table 2-12.2: MS01 standard accessories

Name	Shape	Quantity	Function
MS installation & operation manual		1	
Adapter pipe (for liquid pipe)		1	Connect the MS box and the outdoor unit.
Adapter pipe (for high pressure gas pipe)	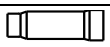	2	
Adapter pipe (for low pressure gas pipe)	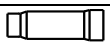	2	

Table 2-12.3: MS04-12 standard accessories

Name	Shape	Quantity	Function
MS installation & operation manual		1	
Drainage pipe	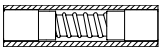	2	Connect the drainage port of the MS box and the PVC water pipe.
Snap ring		2	Fasten the connector between the drainage pipe and the MS drainage port.
Adapter pipe (for liquid pipe)	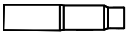	1	Connect the MS box and the outdoor unit. The quantity of adapter pipe (for liquid pipe) of MS08/MS10/MS12 is 2.
		1	
Adapter pipe (for high pressure gas pipe)	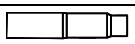	1	
	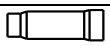	1	
Adapter pipe (for low pressure gas pipe)		1	
	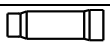	1	
Matched resistor		4	Enhances communication stability

12.3 Optional Accessories

Table 2-12.4: Optional accessories

Optional accessories	Model	Packed dimensions (mm)	Net/gross weight (kg)	Function
Outdoor branch joint kits	FQZHW-02SB1	365×195×215	2.7/3.9	Distribute refrigerant to indoor units and balance flow resistance between outdoor units
	FQZHW-03SB1	475×165×385	4.9/7.5	
Branch joint kits /branch headers for joints between indoor units and MS box	FQZHN-01D	290×105×100	0.3 / 0.4	
	FQZHN-02D	290×105×100	0.4 / 0.6	
	DXFQT4-01	450×240×100	1.4 / 0.7	
	DXFQT8-01	755×275×135	3.1 / 1.6	
Branch joint kits for joints between MS box and outdoor units	FQZHN-01SB1	257×127×107	0.2/0.8	
	FQZHN-02SB1	287×137×107	0.8/1.2	
	FQZHN-03SB1	297×167×177	1.3/1.8	
	FQZHN-04SB1	372×197×187	1.7/2.6	
	FQZHN-05SB1	432×222×227	2.4/3.8	
Branch joint kits for MS box	FQZHN-09A	287×137×107	0.3 / 0.7	Connect lager capacity indoor unit (capacity is 16-28 kW)

Part 3

System Design and Installation

1 Preface to Part 3 110

2 Unit Placement and Installation 111

3 Outdoor Unit Ducting and Shielding 120

4 Refrigerant Piping Design 125

5 Refrigerant Piping Installation 141

6 Drain Piping 154

7 Insulation 157

8 Charging Refrigerant 159

9 Electrical Wiring 161

10 Installation in Areas of High Salinity 166

11 Commissioning 167

12 Appendix to Part 3 – System Commissioning Report 170

1 Preface to Part 3

1.1 Notes for Installers Boxes

The information contained in this Engineering Data Book may primarily be of use during the system design stage of a Mundoclima V6R Series VRF project. Additional important information which may primarily be of use during field installation has been placed in boxes, such as the example below, titled “Notes for installers”.

Notes for installers

- Notes for installers boxes contain important information which may primarily be of use during field installation, rather than during desk-based system design.

1.2 Definitions

In this Engineering Data Book, the term “applicable legislation” refers to all national, local and other laws, standards, codes, rules, regulations and other legislation that apply in a given situation.

1.3 Precautions

All system installation including installation of piping and electrical works must only be carried out by competent and suitably qualified, certified and accredited professionals and in accordance with all applicable legislation.

2 Unit Placement and Installation

2.1 Outdoor Units

2.1.1 Placement considerations

Placement of outdoor units should take account of the following considerations:

- Air conditioners should not be exposed to direct radiation from a high-temperature heat source.
- Air conditioners should not be installed in positions where dust or dirt may affect heat exchangers.
- Air conditioners should not be installed in locations where exposure to oil or to corrosive or harmful gases, such as acidic or alkaline gases, may occur.
- Air conditioners should not be installed in locations where exposure to salinity may occur unless the anti-corrosion treatment for high-salinity areas customization option has been added and the precautions described in Part 3, 10 “Installation in Areas of High Salinity” are taken.
- Outdoor units should be installed in well-drained, well-ventilated positions that are as close as possible to the indoor units.

2.1.2 Spacing

Outdoor units must be spaced such that sufficient air may flow through each unit. Sufficient airflow across heat exchangers is essential for outdoor units to function properly. Figures 3-2.1 to 3-2.3 show spacing requirements in three different scenarios.

If the particular circumstances of an installation require a unit to be placed closer to a wall than specified in Figures 3-2.1 to 3-2.3, a discharge duct should be installed. Refer to Part 3, 3 “Outdoor Unit Ducting and Shielding”. Depending on the height of adjacent walls relative to the height of the units, ducting may be required. Refer to Part 3, 3 “Outdoor Unit Ducting and Shielding”.

Figure 3-2.1: Single unit installation (unit: mm)

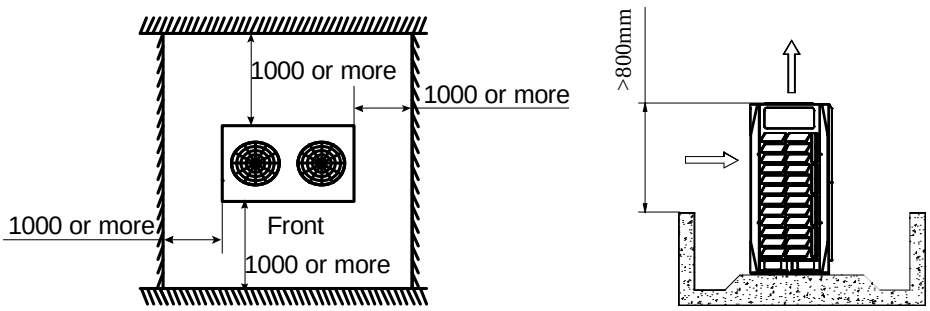

Figure 3-2.2: Single row installation (unit: mm)

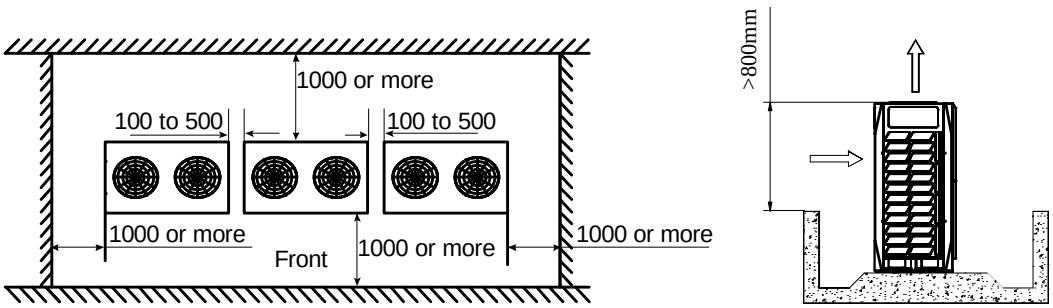

Figure 3-2.3: Multi-row installation (unit: mm)

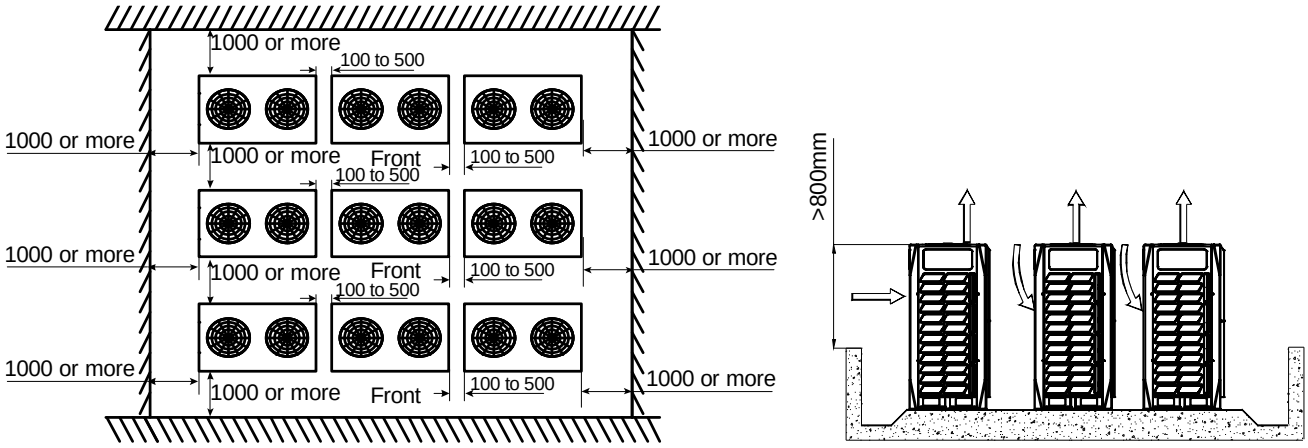

If obstacles are around the outdoor unit, they must be 800mmbelow the top of the outdoor unit. Otherwise, a mechanical exhaust device must be added.

Figure 3-2.4: Mechanical exhaust device requirements

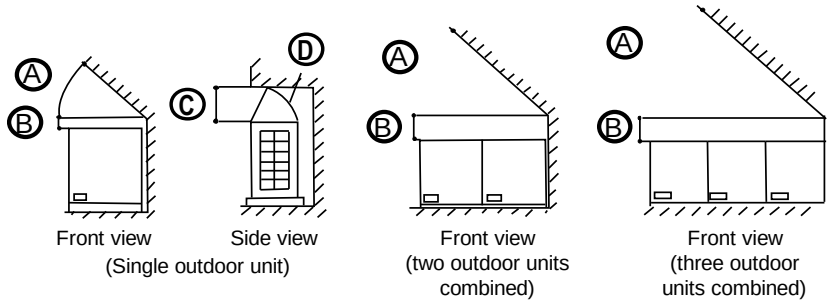

Table 3-2.1: Mechanical exhaust device requirements

A	A ＞ 45°
B	B ＞ 300 mm
C	C ＞ 1000 mm
D	Airflow deflector

2.1.3 Master and slave unit positioning

In systems with multiple outdoor units, the units should be placed in order from largest capacity unit to smallest capacity unit. The largest capacity unit must be placed on the first branch, and be set as the master unit, while the others should be set as slave units. Refer to the V6R Service Manual, Part 4 for details of how to set units as master/slave.

The example in Figure 3-2.5 illustrates the placing of units in a 46HP combination:

- Place the 18HP unit on the first branch and set it as the master unit.
- Place the 16HP and 12HP units on the next branches and set them as slave units.

Figure 3-2.5: Positioning of master and slave units

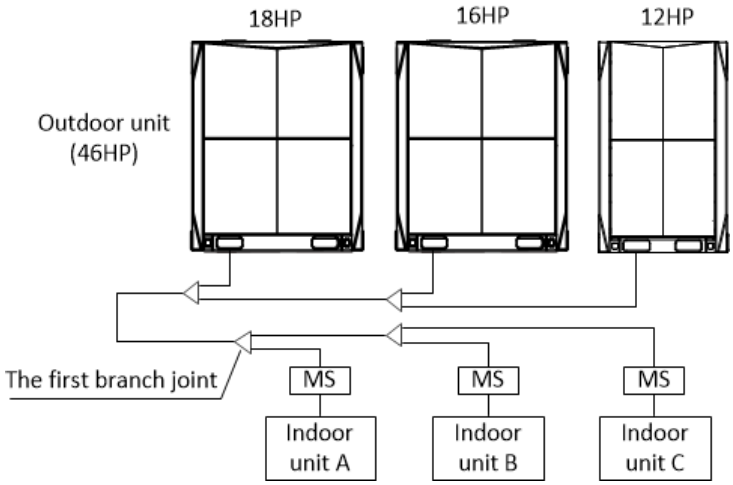

2.1.4 Base structures

Outdoor unit base structure design should take account of the following considerations:

- A solid base prevents excess vibration and noise. Outdoor unit bases should be constructed on solid ground or on structures of sufficient strength to support the units' weight.
- Bases should be at least 200mm high to provide sufficient access for installation of piping.
- Either steel or concrete bases may be suitable.
- A typical concrete base design is shown in Figure 3-2.6. A typical concrete specification is 1 part cement, 2 parts sand and 4 parts crushed stone with Φ10mm steel reinforcing bar. The edges of the base should be chamfered.
- To ensure that all contact points are equally secure, bases should be completely level. Base design should ensure that the points on the units' bases designed for weight-bearing support are fully supported. Bolt spacings should be as per Figure 3-2.7 and Table 3-2.2.
- A drainage ditch should be provided to allow drainage of condensate that may form on the heat exchangers when the units are running in heating mode. The drainage should ensure that condensate is directed away from roadways and footpaths, especially in locations where the climate is such that condensate may freeze.

Figure 3-2.6: Outdoor unit typical concrete base structure design (unit: mm)

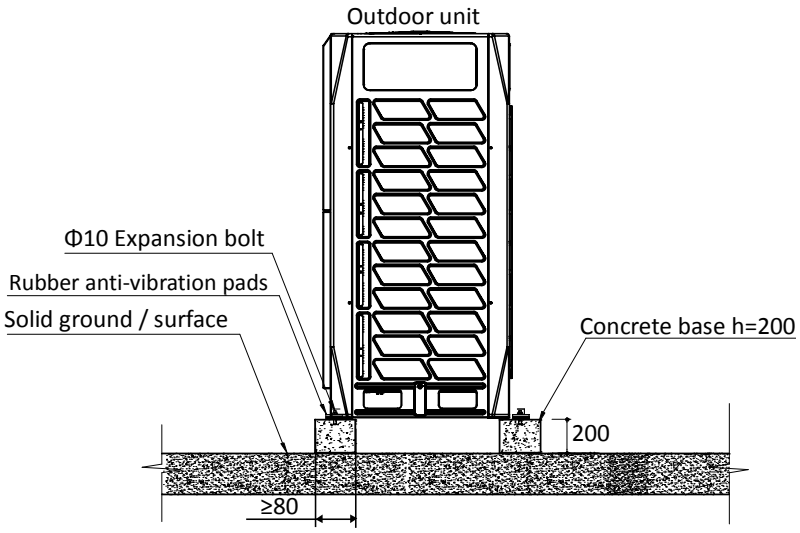

Figure 3-2.7: Expansion bolt positioning

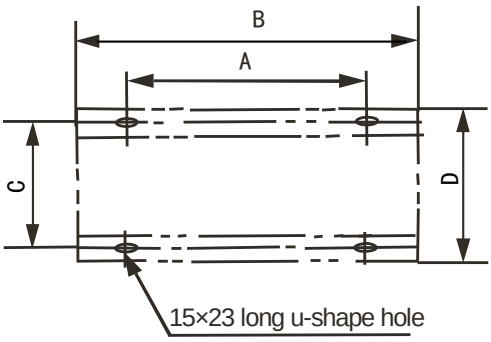

Table 3-2.2: Expansion bolt spacings

Dimension (mm)	8-12HP	14-18HP
A	740	1090
B	990	1340
C	723	723
D	790	790

2.1.5 Acceptance and unpacking

Notes for installers

- When units are delivered check whether any damage occurred during shipment. If there is damage to the surface or outside of a unit, submit a written report to the shipping company.
- Check that the model, specifications and quantity of the units delivered are as ordered.
- Check that all accessories ordered have been included. Retain the Owner's Manual for future reference.

2.1.6 Hoisting

Notes for installers

- Do not remove any packaging before hoisting. If units are not packaged or if the packaging is damaged, use suitable boards or packing material to protect the units.
- Hoist one unit at a time, using two ropes to ensure stability.
- Keep units upright during hoisting, ensuring that the angle to the vertical does not exceed 30°.

2.2 Mode Selection Box

2.2.1 Placement considerations

Placement of indoor units should take account of the following considerations:

- To prevent the refrigerant noise from disturbing the people in the room, keep at least 5 m of piping between the occupied room and the MS box.
- If there is no false ceiling in the room, please add sound insulation around the piping between the MS box and the indoor unit, or keep a much longer distance between the MS box and occupied room.
- To prevent excessive noise or vibration during operation, suspension rods or other weight-bearing fixings should typically be able to bear twice the unit’s weight.
- Sufficient space for drain piping and for access during servicing and maintenance should be allowed.

2.2.2 Spacing

MS box must be spaced such that servicing and maintenance should be allowed. Figures 3-2.8 to 3-2.9 show spacing requirements for MS box.

MS01

Figure 3-2.8: MS01 installation requirement (unit: mm)

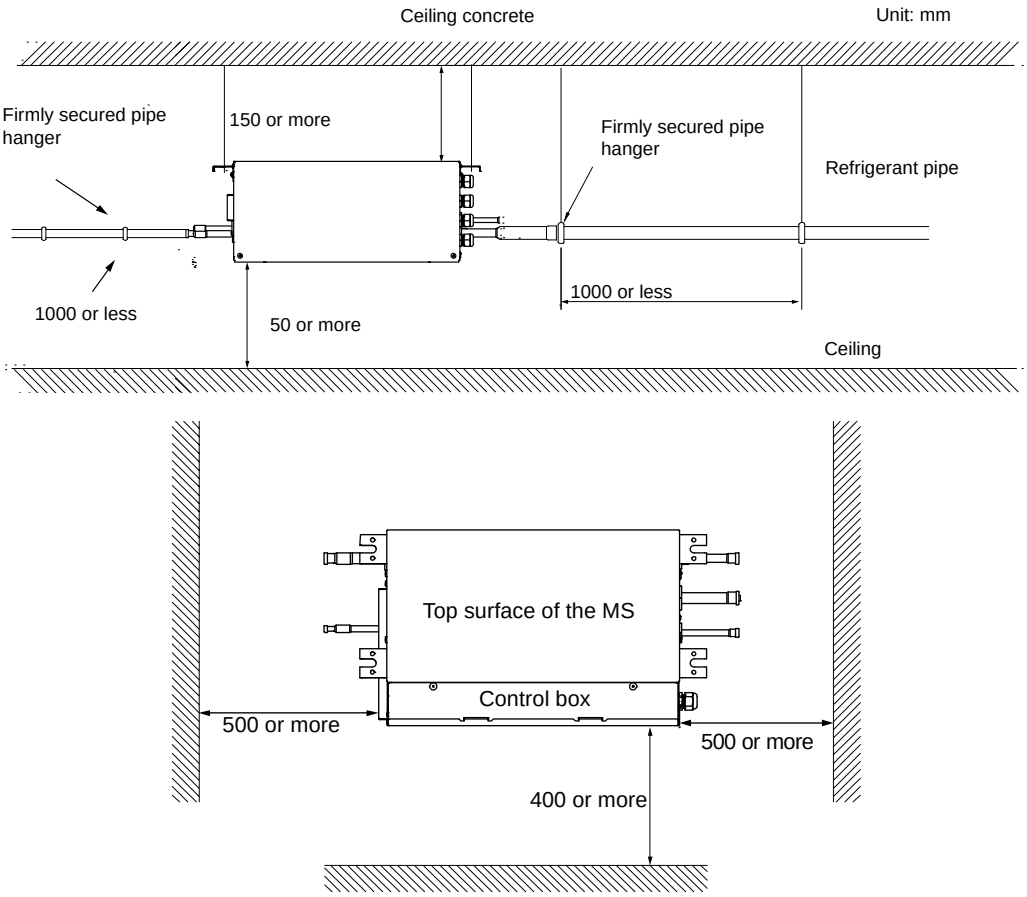

MS04-12

Figure 3-2.9: MS04-12 installation requirement (unit: mm)

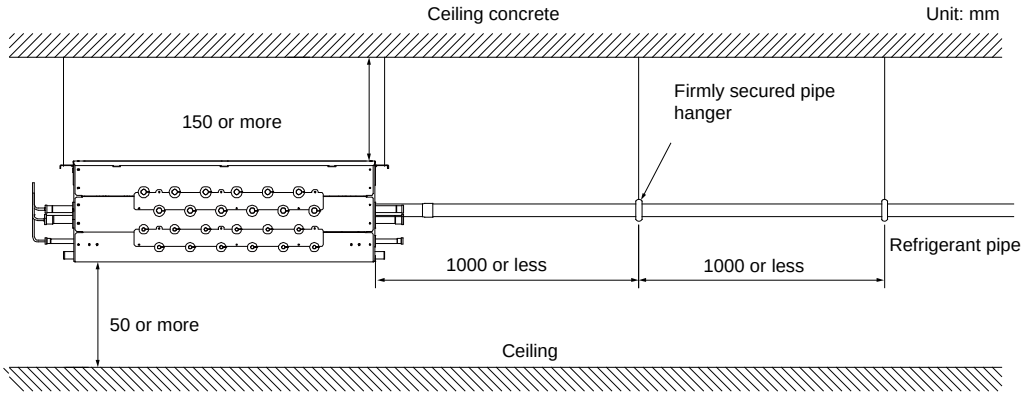

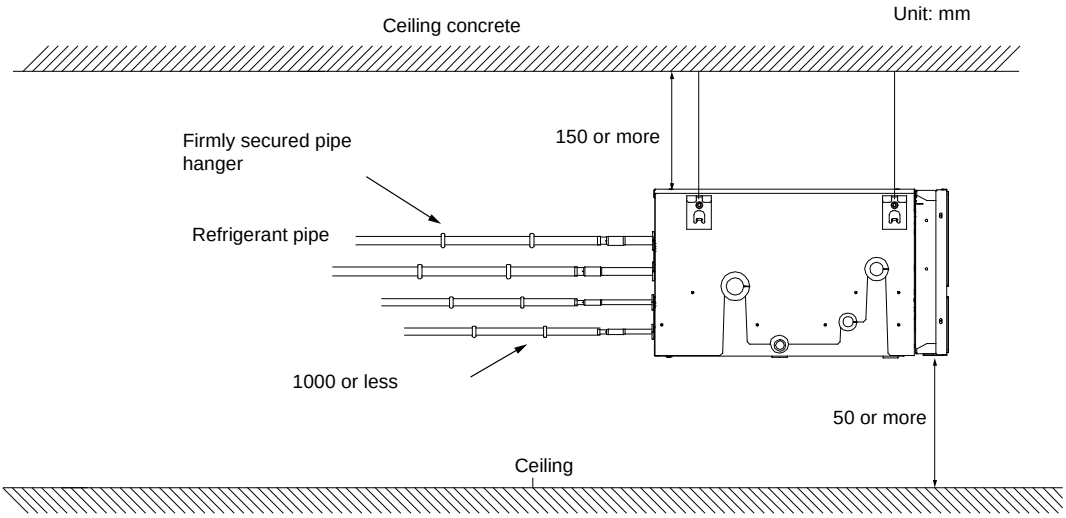

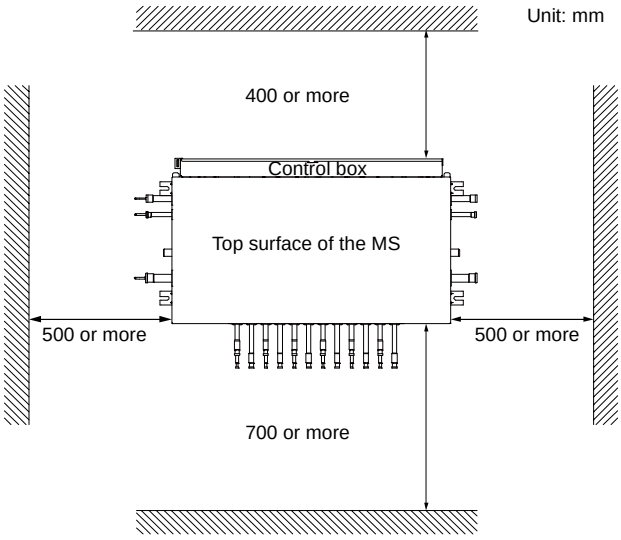

2.2.3 Hanging brackets

MS box hanging brackets installation should take account of the following considerations:

- Use a suspension bolt size of M10
- Use mold-in inserts and embedded foundation bolts for new installations or hole-in anchor bolts or similar hardware for existing installations, taking care to install them in a manner that can withstand the unit's weight.

Figure 3-2.10: Suspension bolt spacing

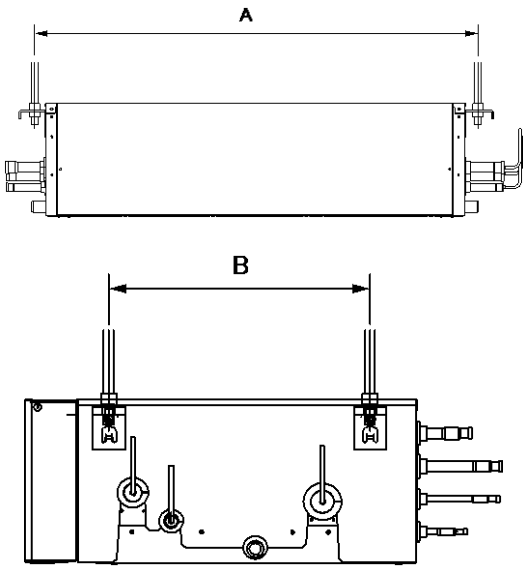

Table 3-2.3: Suspension bolt spacing (unit: mm)

Model	A	B
MS01	483	172
MS04 MS06	702	383
MS08 MS10 MS12	1008	383

2.2.4 Acceptance and unpacking

Notes for installers

- When units are delivered check whether any damage occurred during shipment. If there is damage to the surface or outside of a unit, submit a written report to the shipping company.
- Check that the model, specifications and quantity of the units delivered are as ordered.
- Check that all accessories ordered have been included.

2.2.5 Multiple installations for MS01

Electric control box replacing

If the installation location of the electric control box must be changed because of the installation conditions, follow these steps (1) to (4):

(1) Remove the screws and pull off the electrical box cover.

Figure 3-2.11: Step 1 for electric control box replacing

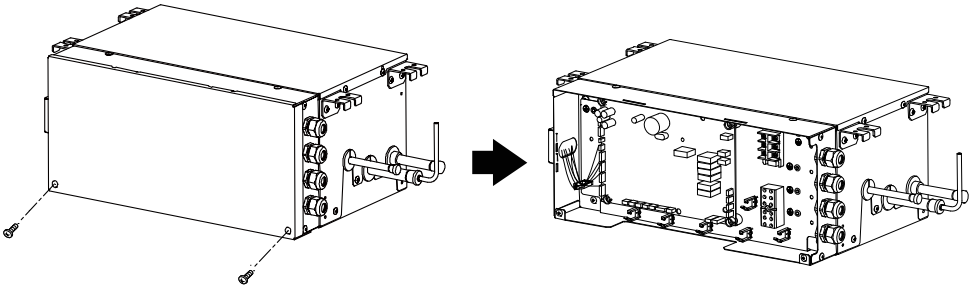

(2) Remove 1 screw shown in the figure on the below. Remove the sealing plate.

Figure 3-2.12: Step 2 for electric control box replacing

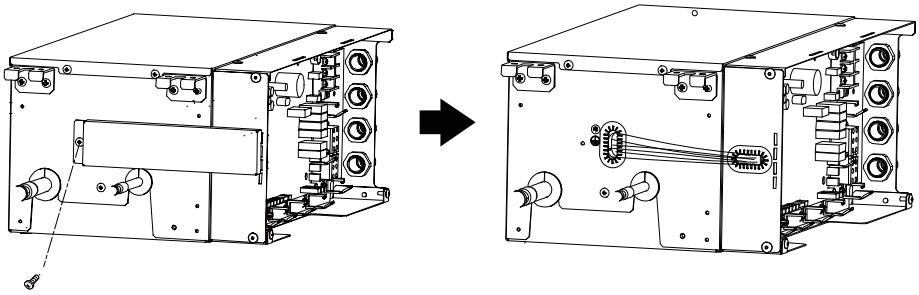

(3) Remove 4 screws shown in the figure on the below, remove the electrical box to the opposite side.

Figure 3-2.13: Step 3 for electric control box replacing

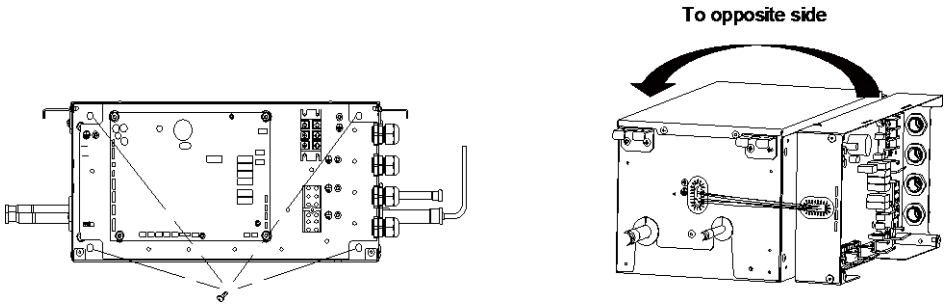

(4) Attach the electrical box and electrical box cover to the other side and secure them with the screws. Attach the sealing plate with 1 screw.

Figure 3-2.14: Step 4 for electric control box replacing

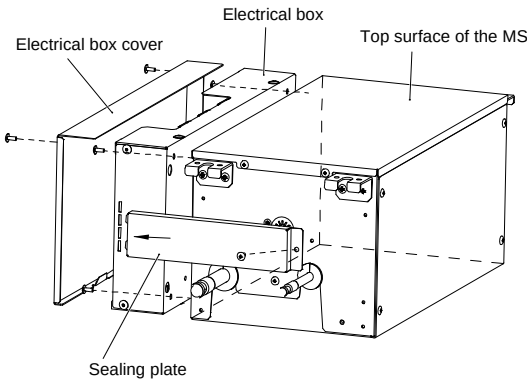

Change to wall-mounted type

MS01 has two different installation types: ceiling-suspended type and wall-mounted type. The factory default installation type is ceiling-suspended type, if the installation type must be changed to wall-mounted type, follow these steps (1) to (4):

(1) Remove the 8 screws shown in the figure and pull off 4 hooks.

(2) Attach the hooks shown in the figure with 8 screws from the previous step.

Figure 3-2.15: Step 1 for wall-mounted type replacing

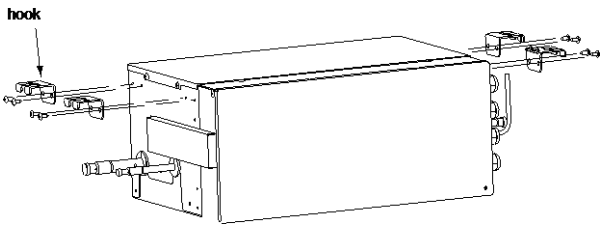

Figure 3-2.16: Step 2 for wall-mounted type replacing

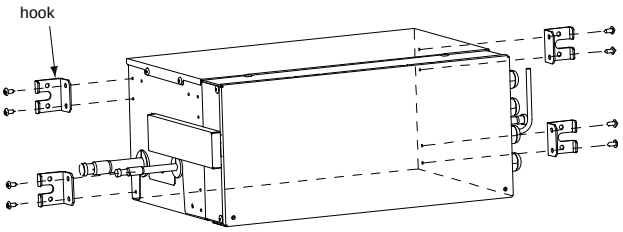

(3) Create a gap between the wall, screw in the temporary screws (M5, field supply), and hang the MS box.

(4) After checking with a level that the MS box is horizontal, fix the unit with 8 screws (M5, field supply).

Figure 3-2.17: Step 1 for wall-mounted type replacing

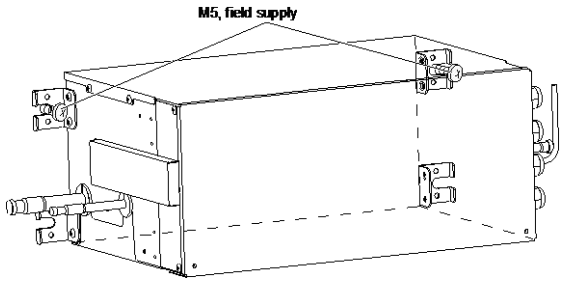

Figure 3-2.18: Step 2 for wall-mounted type replacing

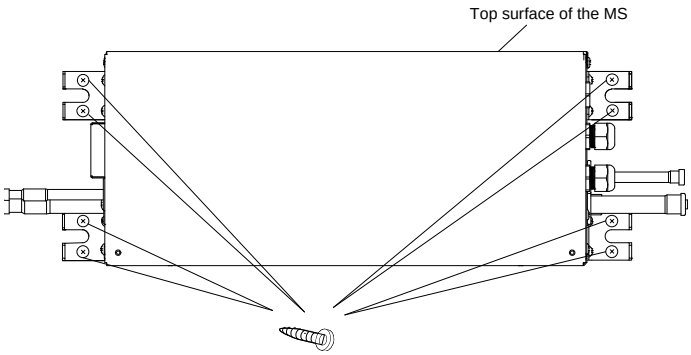

2.3 Indoor Units

2.3.1 Placement considerations

Placement of indoor units should take account of the following considerations:

- Sufficient space for drain piping and for access during servicing and maintenance should be allowed.
- To ensure a good cooling/heating effect, short-circuit ventilation (where outlet air returns quickly to a unit's air inlet) should be avoided.
- To prevent excessive noise or vibration during operation, suspension rods or other weight-bearing fixings should typically be able to bear twice the unit's weight.

Notes for installers

- Before installing an indoor unit, check that the model to be installed is as specified in the construction drawings and confirm the correct orientation of the unit.
- Ensure that units are installed at the correct height.
- To allow smooth condensate drainage and to ensure unit stability (to prevent excessive noise or vibration), ensure that units are level to within 1° of the horizontal. If a unit is not level to within 1° of the horizontal, water leakage or abnormal vibration/noise may occur.

3 Outdoor Unit Ducting and Shielding

3.1 Ducting Requirements

Depending on the height of adjacent walls relative to the height of the units, ducting may be required to ensure proper air discharge. In the situation depicted in Figure 3-3.1, the vertical section of ducting should be at least H-h high.

Figure 3-3.1: Adjacent wall higher than outdoor unit

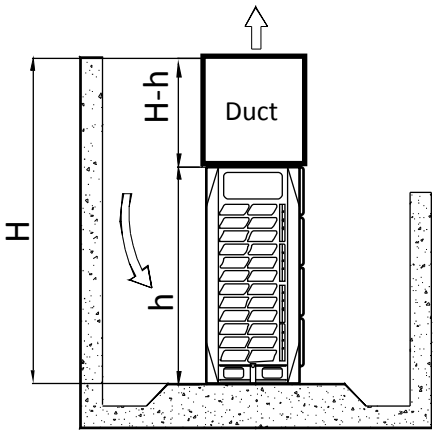

3.2 Design Considerations

Outdoor unit ducting design should be take account of the following:

- Each duct should contain no more than one bend.
- Vibration isolation should be added to the connection between the unit and the ducting to avoid vibration/noise.
- Louvers are installed for safety, they should be installed at an angle no greater than 15° to the horizontal, to minimize the impact on airflow.

3.3 Ducting for 8/10/12HP Units

3.3.1 Option A – Transverse ducting

Figure 3-3.2: Transverse ducting for 8/10/12HP units (unit: mm)

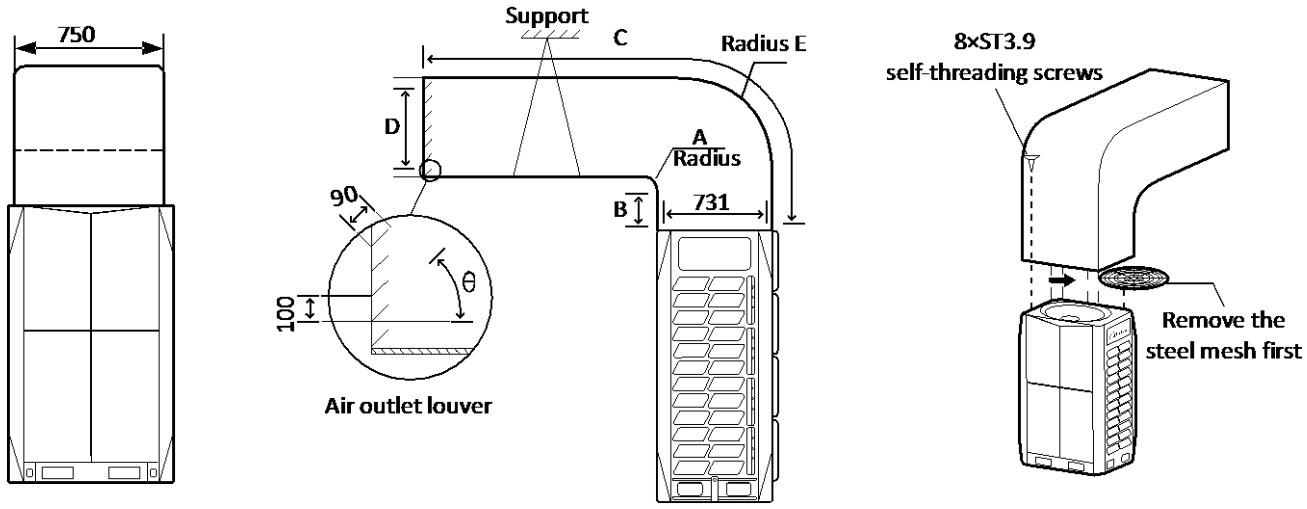

Table 3-3.1: Duct dimensions

Dimensions (mm)	
A	A ≥ 300
B	B ≥ 250
C	C ≤ 3000
D	731 ≤ D ≤ 770
E	E = A + 731
θ	Θ ≤ 15°

Table 3-3.2: External static pressure

ESP (Pa)	Remarks
0	Factory default
0 – 20	Remove steel mesh and connect to duct < 3m long
20-80	Dial switch S4 setting

3.3.2 Option B – Longitudinal ducting

Figure 3-3.3: Longitudinal ducting for 8/10/12HP units (unit: mm)

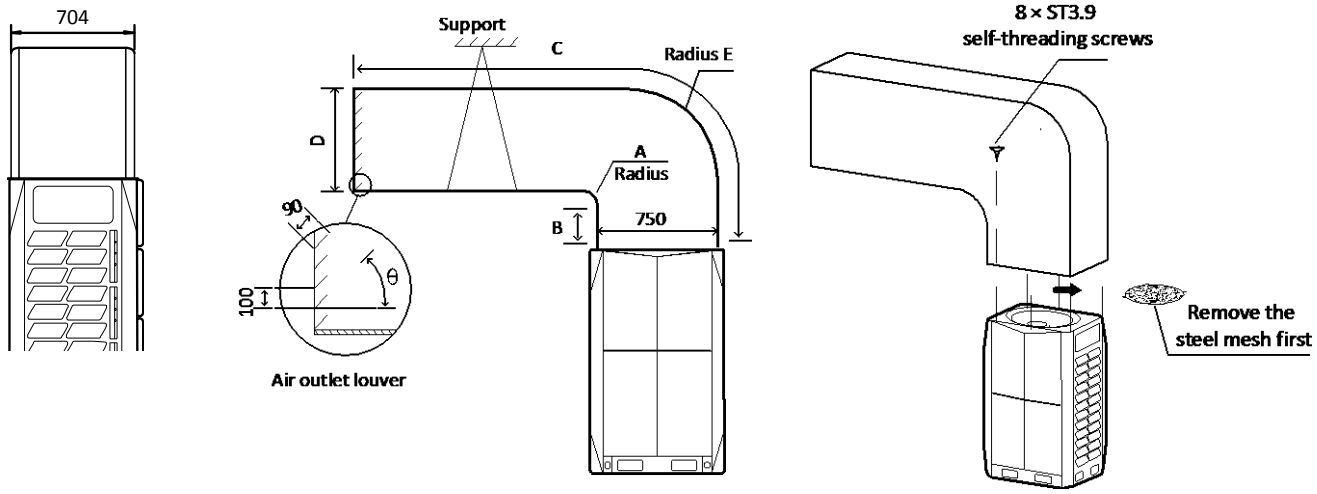

Table 3-3.3: Duct dimensions

Dimensions (mm)	
A	A ≥ 300
B	B ≥ 250
C	C ≤ 3000
D	D ≥ 750
E	E = A + 750
θ	Θ ≤ 15°

Table 3-3.4: External static pressure

ESP (Pa)	Remarks
0	Factory default
0-20	Remove steel mesh and connect to duct < 3m long
20-80	Dial switch S4 setting

Ducting for 14/16/18HP Units

3.3.3 Option A – Transverse ducting

Figure 3-3.4: Transverse ducting for 14/16/18HP units (unit: mm))

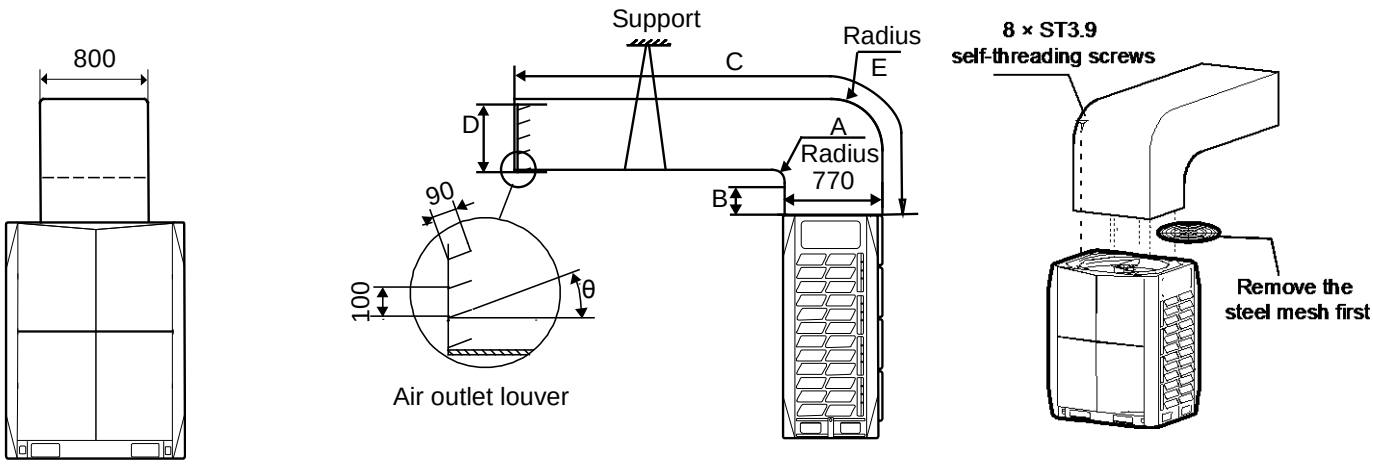

Table 3-3.5: Duct dimensions

Dimensions (mm)	
A	A ≥ 300
B	B ≥ 250
C	C ≤ 3000
D	D ≥ 770
E	E = A + 770
θ	Θ ≤ 15°

Table 3-3.6: External static pressure

ESP (Pa)	Remarks
0	Factory default
0 – 20	Remove steel mesh and connect to duct < 3m long
20-80	Dial switch S4 setting

3.3.4 Option B – Longitudinal ducting

Figure 3-3.5: Longitudinal ducting for 14/16/18HP units (unit: mm)

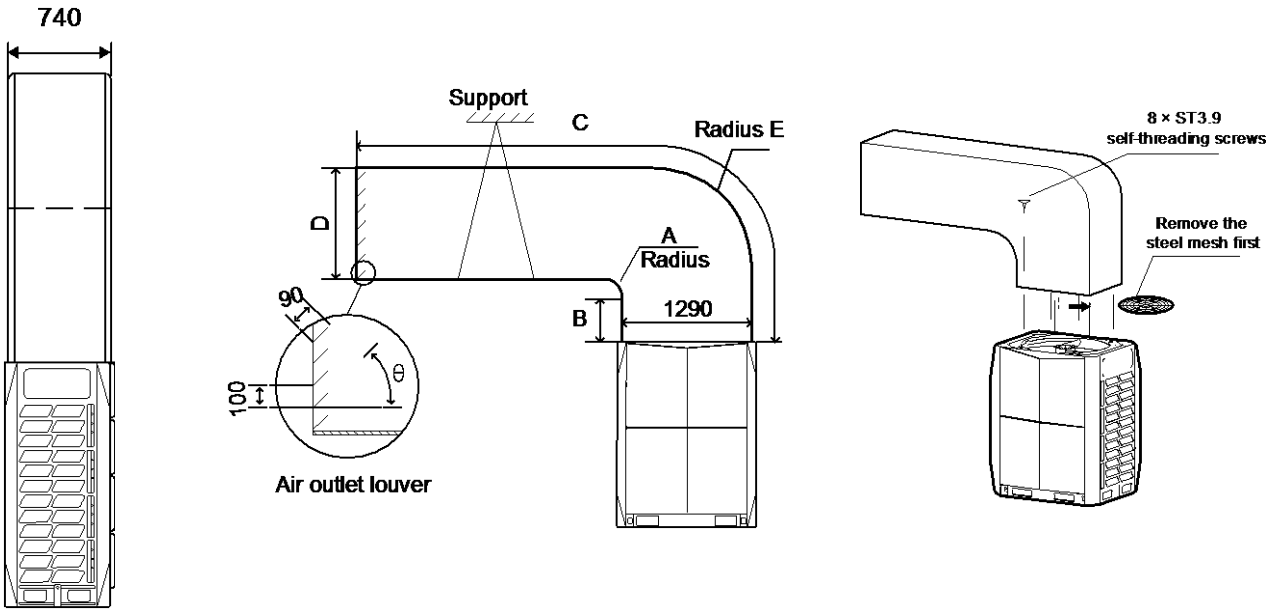

Table 3-3.7: Duct dimensions

Dimensions (mm)	
A	A ≥ 300
B	B ≥ 250
C	C ≤ 3000
D	D ≥ 1290
E	E = A + 1290
θ	Θ ≤ 15°

Table 3-3.8: External static pressure

ESP (Pa)	Remarks
0	Factory default
0-20	Remove steel mesh and connect to duct < 3m long
20-80	Dial switch S4 setting

3.4 Fan Performance

The default external static pressure of outdoor units is zero. With the steel mesh cover removed the external static pressure is 0-20Pa.

Figure 3-3.6: 8HP units fan performance

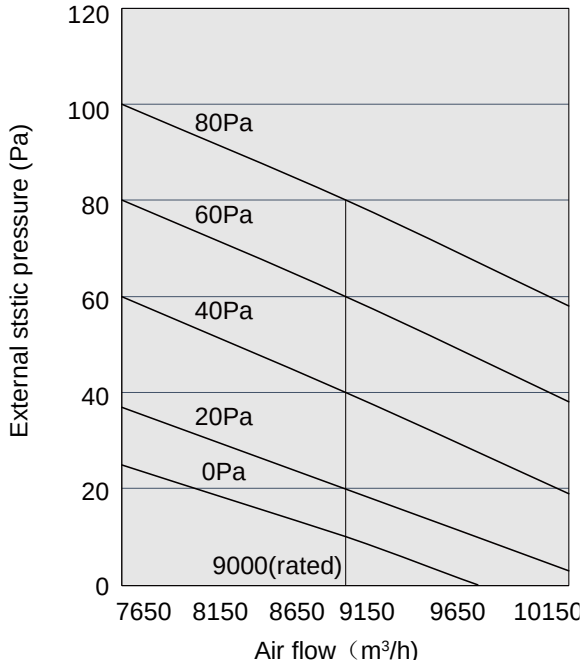

Figure 3-3.7: 10HP units fan performance

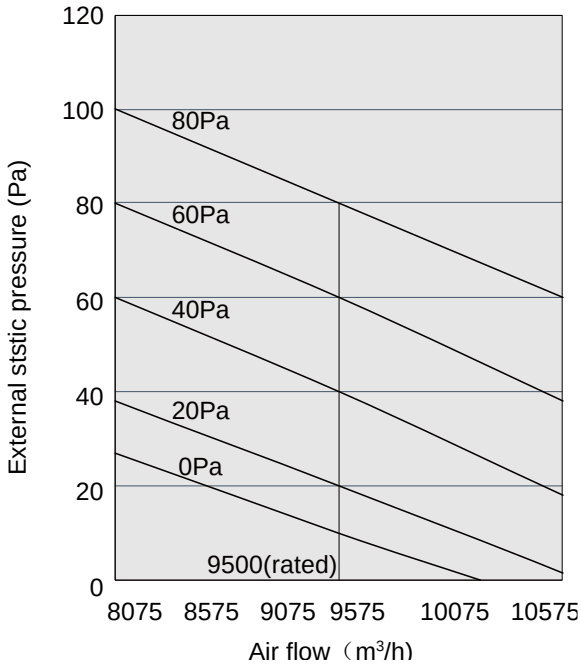

Figure 3-3.8: 12HP units fan performance

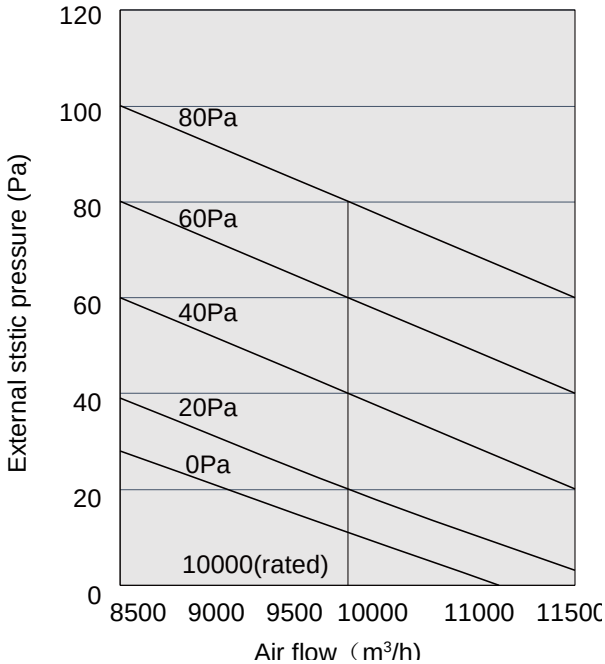

Figure 3-3.9: 14HP units fan performance

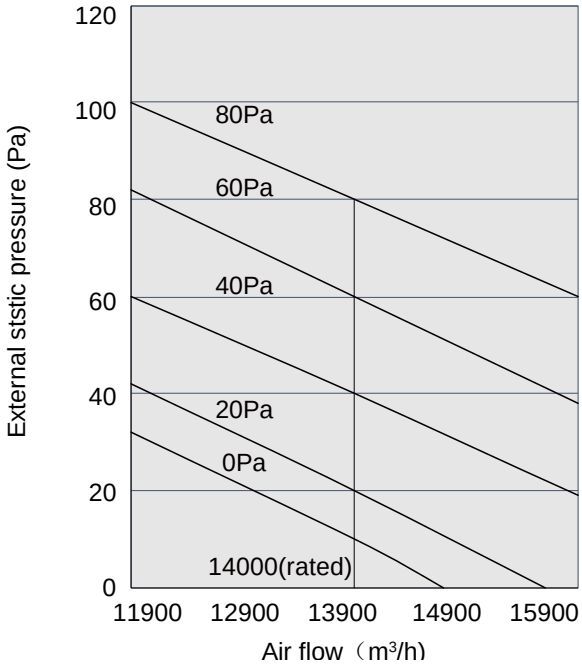

Figure 3-3.10: 16HP units fan performance

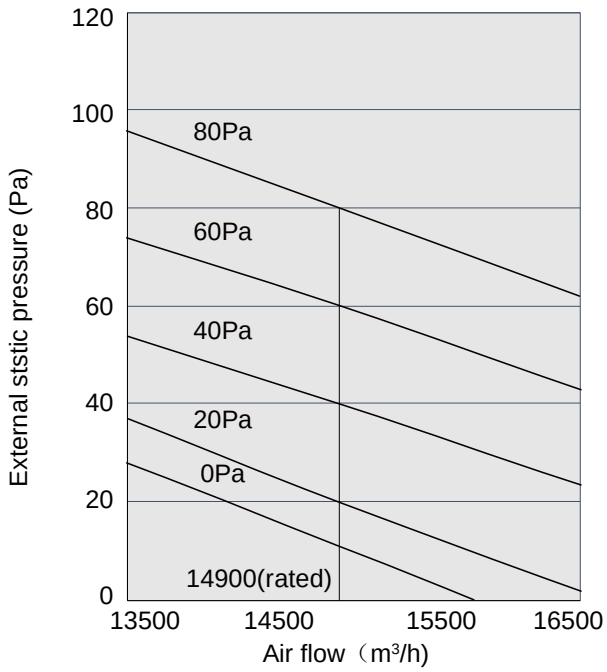

Figure 3-3.11: 18HP units fan performance

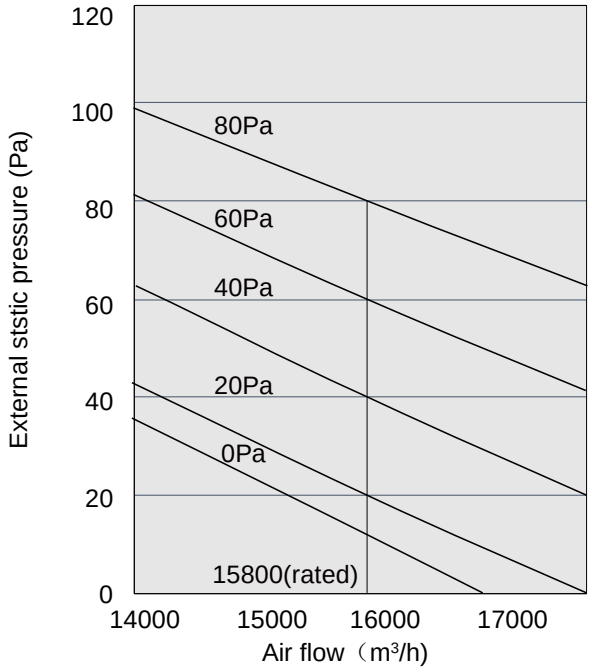

Notes for installers

- Before instal outdoor unit ducting, be sure to remove the unit's steel mesh cover, otherwise airflow will be adversely affected.

3.5 Snow Shielding

In areas of high snowfall, snow shields should be installed on air inlets and outlets to prevent snow from entering the units. Additionally, the height of the base support should be higher than the highest snow level of local area.

Figure 3-3.12: Outdoor unit snow shielding

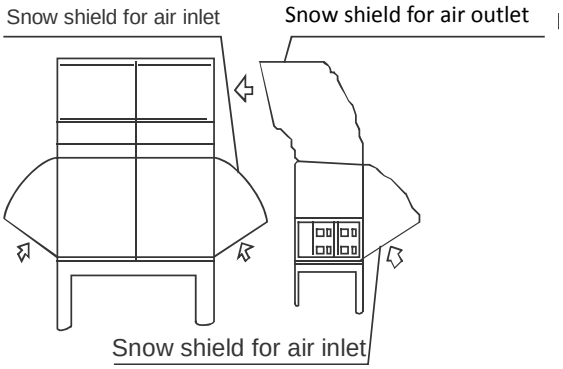

4 Refrigerant Piping Design

4.1 Design Considerations

Refrigerant piping design should take account of the following considerations:

- The amount of brazing required should be kept to a minimum.
- On the two inside sides of the first indoor branch joint ("A" in Figures 3-4.2, 3-4.3 and 3-4.4) the system should, as far as possible, be equal in terms of number of units, total capacities and total piping lengths.

4.2 Material Specification

Only seamless phosphorus-deoxidized copper piping that complies with all applicable legislation should be used. Temper grades and minimum thicknesses for different diameters of piping are specified in Table 3-4.1.

Table 3-4.1: Piping temper and thickness

Piping outer diameter (mm)	Temper[1]	Minimum thickness (mm)
Φ6.35	O (annealed)	0.8
Φ9.53		0.8
Φ12.7		0.8
Φ15.9		1.0
Φ19.1		1.0
Φ22.2	1/2H (half hard)	1.2
Φ25.4		1.2
Φ28.6		1.3
Φ31.8		1.5
Φ38.1		1.5
Φ41.3		1.5
Φ44.5		1.5
Φ54.0		1.8

Notes:

1. O: coiled piping; 1/2H: straight piping.

4.3 Permitted Piping Lengths and Level Differences

4.3.1 Connection with only VRF indoor units

The piping length and level difference requirements that apply are summarized in Table 3-4.3 and are fully described as follows (refer to Figure 3-4.2):

1. **Requirement 1:** The total length of piping in each refrigerant system should not exceed 1000m. When calculating the total length of piping, the actual length of the indoor main pipes (the piping between the first indoor branch joint and the MS box, L2 to L9) should be doubled.
2. **Requirement 2:** The piping between the farthest indoor unit and the first outdoor branch joint should not exceed 175m (actual length) and 200m (equivalent length). (The equivalent length of each branch joint is 0.5m and the equivalent length of each MS box is 1m.) When the equivalent piping length from outdoor units to the farthest indoor unit is larger than 90 m, the liquid pipe of the main pipe (L1) should be increased as Table 3-4.2.
3. **Requirement 3:** The piping between the farthest indoor unit (N8) and first indoor branch joint (A) should not exceed 40m in length (L2 + L4 + f + i ≤ 40m) unless the following conditions are met and the following measures are taken, in which case the permitted length is up to 90m:

   Conditions:

   a) The piping from each indoor unit to its nearest branch joint or MS box does not exceed 40m in length.

   b) The difference in length between {the piping from the first indoor branch joint (A) to the farthest indoor unit (N8)} and {the piping from the first indoor branch joint (A) to the nearest indoor unit (N3)} does not exceed 40m. That is: (L1 + L2 + L4 + f + i) - (L1 + L2 + L3 + c) ≤ 40m.

   Measures:

   a) Increase the diameter of the indoor main pipes (the piping between the first indoor branch joint and the MS box, L_2 to L_9) as per Table 3-4.2. If the indoor main pipes are larger than size the main pipe (L_1) after increasing, the liquid pipe of the main pipe (L1) should be increased as Table 3-4.2.

Table 3-4.2: Diameter increase requirements

Original (mm)	Increased (mm)
Φ9.53	Φ12.7
Φ12.7	Φ15.9
Φ15.9	Φ19.1
Φ19.1	Φ22.2
Φ22.2	Φ25.4

4. **Requirement 4:** The largest level difference between indoor unit and outdoor unit should not exceed 110m.

   If the outdoor unit is above and the level difference is greater than 50 m, the liquid pipe of the main pipe (L1) should be increased as Table 3-4.2. And it is recommended that an oil return bend with dimensions as specified in Figure 3-4.1 is set every 10m in the gas pipe of the main pipe.

   If the outdoor unit is below and the level difference is more than 40 m, the liquid pipe of the main pipe (L1) should be increased as Table 3-4.2.

Figure 3-4.1: Oil return bend (unit: mm)

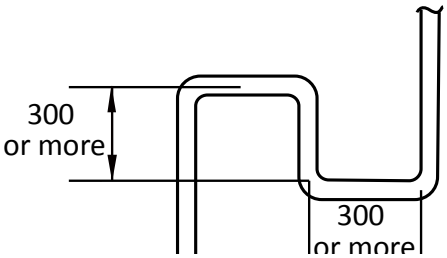

5. **Requirement 5:** The largest level difference between indoor units should not exceed 30m.
6. **Requirement 6:** Piping between outdoor unit and outdoor branch joint should not exceed 10m. g1 ≤ 10 m; g2+G1 ≤ 10 m; g3 + G1 ≤ 10 m

Notes:

1. The size of main liquid pipe (L1) and indoor main liquid pipes (L2 to L9) can only be increased once if one or more of requirements are met in the requirement 2 to requirement 4.

Figure 3-4.2: Permitted refrigerant piping lengths and level differences

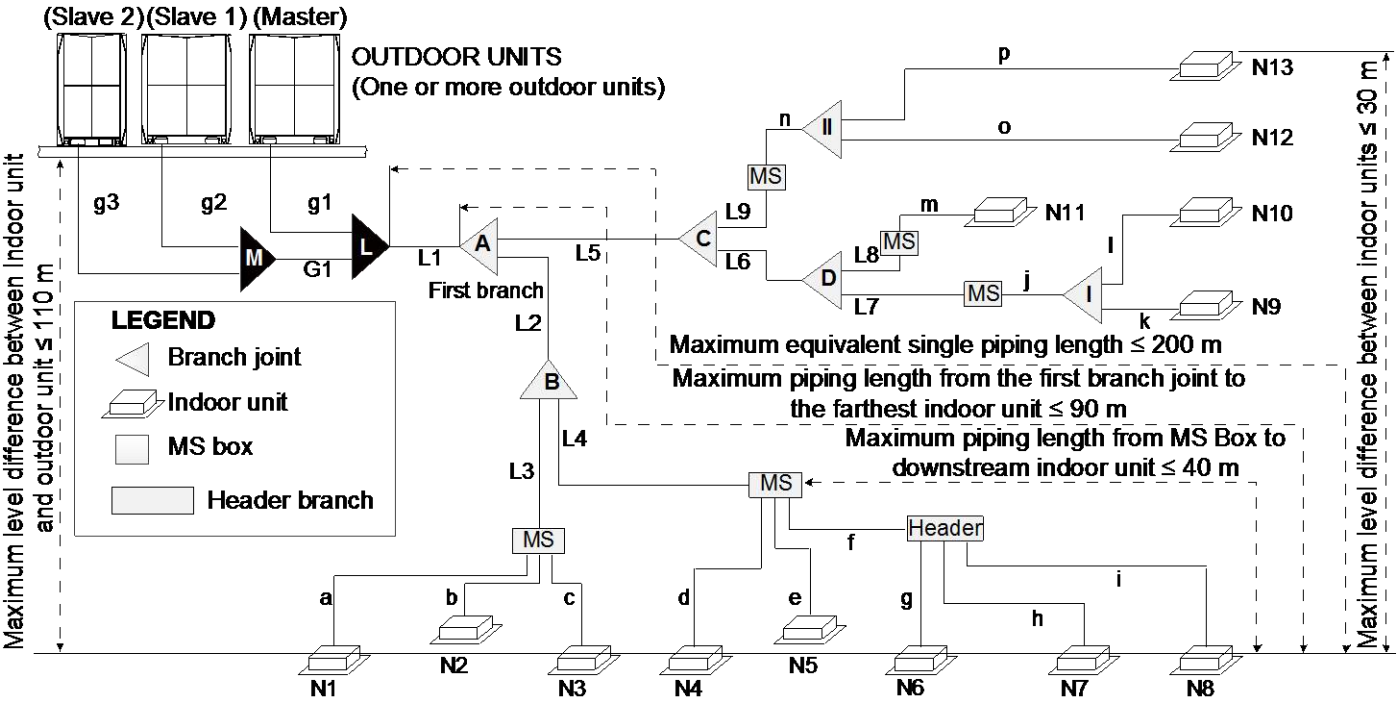

Legend	
g1, g2, g3, G1	Outdoor unit connection pipe
L, M	Outdoor unit branch joint
L1	Main pipe
L2 to L9	Indoor unit main pipe
A to D	Branch joint between main pipe and MS
I, II	Branch joint between MS and indoor unit
a to p	Indoor unit auxiliary pipe
N1 to N13	VRF indoor unit

Notes:
1. When multiple MS units are used in a single system, they should be installed in parallel.
2. Header branch (DXFQT4/DXFQT8) can only be installed downstream of MS.
3. Branches and others header branches cannot be installed downstream of the head branch.

Table 3-4.3: Summary of permitted refrigerant piping lengths and level differences

			Permitted values	Piping in Figure 3-4.2
Piping lengths	Total piping length[1]		≤ 1000m	L1+ 2 x Σ{L2 to L9} + Σ{a to p}
	Piping between farthest indoor unit and first outdoor branch joint[2]	Actual length	≤ 175m	L1 + L2 + L4 + f + i
		Equivalent length	≤ 200 m	
	Piping between farthest indoor unit and first indoor branch joint[3]		≤ 40m / 90m	L2 + L4 + f + i
	Piping between MS to downstream indoor unit		≤ 40 m	f + i
	Piping between outdoor unit and outdoor branch joint		≤ 10 m	g1 ≤ 10 m; g2+G1 ≤ 10 m; g3 + G1 ≤ 10 m
Level differences	Largest level difference between indoor unit and outdoor unit[4]		≤ 110m	
	Largest level difference between indoor units		≤ 30m	

Notes:
1. Refer to Requirement 1, above.
2. Refer to Requirement 2, above.
3. Refer to Requirement 3, above.
4. Refer to Requirement 4 above.

4.3.2 Connection with VRF indoor units and HT hydro module

The piping length and level difference requirements that apply are summarized in Table 3-4.4 and are fully described as follows (refer to Figure 3-4.3):

1. **Requirement 1:** The total length of piping in each refrigerant system should not exceed 600m. When calculating the total length of piping, the actual length of the indoor main pipes (the piping between the first indoor branch joint and the MS box, L2 to L9) should be doubled.
2. **Requirement 2:** The piping between the farthest indoor unit and the first outdoor branch joint should not exceed 135m (actual length) and 160m (equivalent length). (The equivalent length of each branch joint is 0.5m and the equivalent length of each MS box is 1m.) When the equivalent piping length from outdoor units to the farthest VRF indoor unit or HT hydro module unit is ≥ 90 m, the liquid pipe of the main pipe (L1) should be increased as Table 3-4.2.
3. **Requirement 3:** The piping between the farthest indoor unit (N8) and first indoor branch joint (A) should not exceed 40m in length (L1 + L2 + L4 + f + i ≤ 40m). The piping between HT hydro module and first branch joint should not exceed 40m in length (L5 + L9 +o ≤ 40m)
4. **Requirement 4:** The largest level difference between indoor unit or HT hydro module and outdoor unit should not exceed 50m when the outdoor unit is above. The largest level difference between indoor unit or HT hydro module and outdoor unit should not exceed 40m when the outdoor unit is below.
5. **Requirement 5:** The largest level difference between indoor units should not exceed 30m.
6. **Requirement 6:** Piping between outdoor unit and outdoor branch joint should not exceed 10m. g1 ≤ 10 m; g2+G1 ≤ 10 m; g3 + G1 ≤ 10 m

Table 3-4.2: Diameter increase requirements

Original (mm)	Increased (mm)
Φ9.53	Φ12.7
Φ12.7	Φ15.9
Φ15.9	Φ19.1
Φ19.1	Φ22.2
Φ22.2	Φ25.4

Figure 3-4.3: Permitted refrigerant piping lengths and level differences

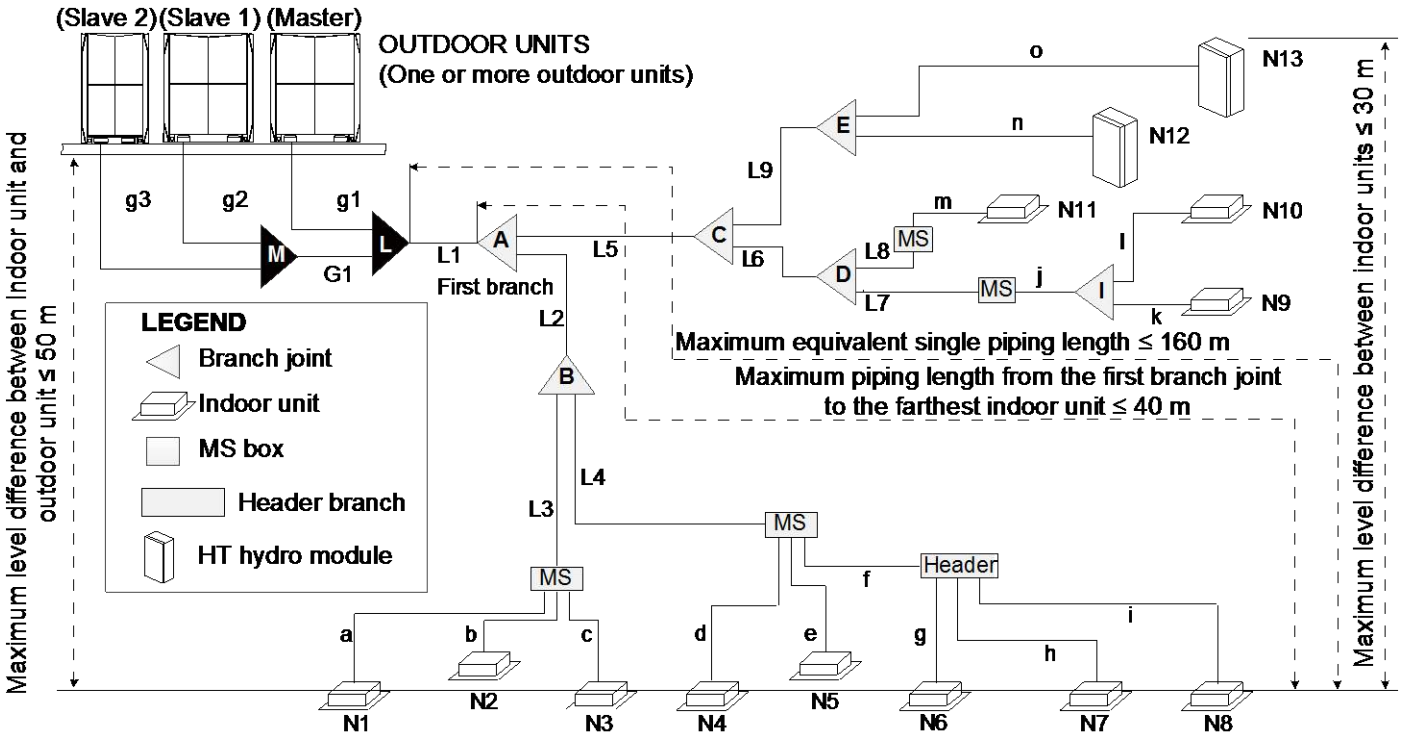

Legend	
g1, g2, g3, G1	Main pipe
L, M	Outdoor unit connection pipe
L1	Outdoor unit branch joint
L2 to L9	Main pipe
A to E	Indoor unit main pipe
I	Branch joint between main pipe and MS or HT hydro module
a to o	Branch joint between MS and indoor unit
N1 to N11	VRF indoor unit
N12, N13	HT Hydro module

Table 3-4.4: Summary of permitted refrigerant piping lengths and level differences

			Permitted values	Piping in Figure 3-4.5
Piping lengths	Total piping length[1]		≤ 600 m	L1+ 2 x Σ{L2 to L9} + Σ{a to o}
	Piping between farthest VRF indoor unit or HT hydro module and first indoor branch joint[2]	Actual length	≤ 135 m	L1 + L2 + L4 + f + i
		Equivalent length	≤ 160 m	
	Piping between farthest VRF indoor unit or HT hydro module and first branch joint[3]		≤ 40 m	L2 + L4 + f + i
	Piping between outdoor unit and outdoor branch joint		≤ 10 m	g1 ≤ 10 m; g2+G1 ≤ 10 m; g3 + G1 ≤ 10 m
Level differences	Largest level difference between VRF indoor unit or HT hydro module and outdoor unit[4]	Outdoor unit is above	≤50 m	
		Outdoor unit is below	≤ 40 m	
	Largest level difference between VRF indoor units or HT hydro module		≤ 30 m	

Notes:
1. Refer to Requirement 1, above.
2. Refer to Requirement 2, above.
3. Refer to Requirement 3, above.
4. Refer to Requirement 4, above.

4.3.3 Connection with VRF indoor units and AHU kits

The piping length and level difference requirements that apply are summarized in Table 3-4.5 and are fully described as follows (refer to Figure 3-4.4):

1. **Requirement 1:** The total length of piping in each refrigerant system should not exceed 1000m. When calculating the total length of piping, the actual length of the indoor main pipes (the piping between the first indoor branch joint and the MS box, L2 to L13) should be doubled.
2. **Requirement 2:** The piping between the farthest indoor unit and the first outdoor branch joint should not exceed 175m (actual length) and 200m (equivalent length). (The equivalent length of each branch joint is 0.5m and the equivalent length of each MS box is 1m.) When the equivalent piping length from outdoor units to the farthest VRF indoor unit or AHU is ≥ 90 m, the liquid pipe of the main pipe (L1) should be increased as Table 3-4.2.
3. **Requirement 3:** The piping between the farthest indoor unit (N8) or AHU (N11) and first indoor branch joint (A) should not exceed 40m.
4. **Requirement 4:** The largest level difference between indoor unit or AHU and outdoor unit should not exceed 50m when the outdoor unit is above. The largest level difference between indoor unit or AHU and outdoor unit should not exceed 40m when the outdoor unit is below.
5. **Requirement 5:** The largest level difference between indoor units or AHUs should not exceed 30m.
6. **Requirement 6:** Piping between outdoor unit and outdoor branch joint should not exceed 10m. g1 ≤ 10 m; g2+G1 ≤ 10 m; g3 + G1 ≤ 10 m

Table 3-4.2: Diameter increase requirements

Original (mm)	Increased (mm)
Φ9.53	Φ12.7
Φ12.7	Φ15.9
Φ15.9	Φ19.1
Φ19.1	Φ22.2
Φ22.2	Φ25.4

Figure 3-4.4: Permitted refrigerant piping lengths and level differences

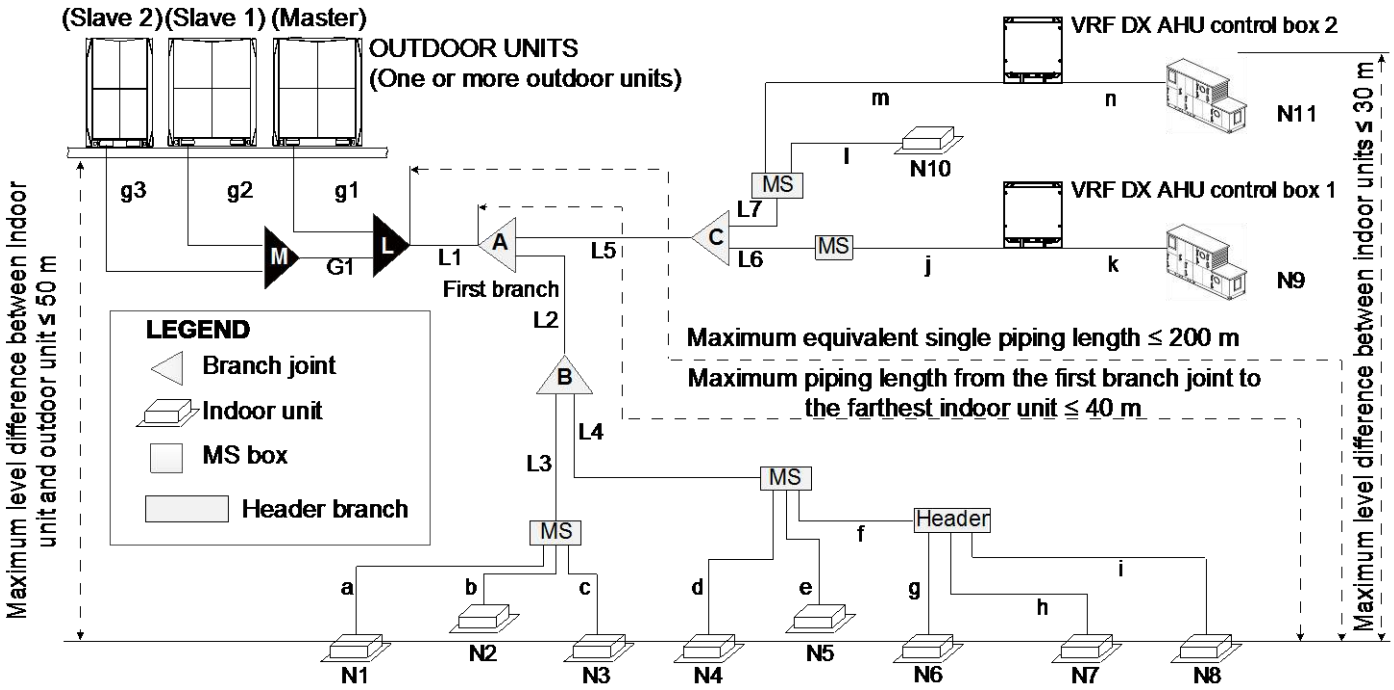

Legend	
g1, g2, g3, G1	Outdoor unit connection pipe
L, M	Outdoor unit branch joint
L1	Main pipe
L2 to L7	Indoor unit main pipe
A to C	Branch joint between main pipe and MS
a to n	Indoor unit auxiliary pipe
N1 to N8, N10	VRF indoor unit
N9, N11	AHUs
g1, g2, g3, G1	Outdoor unit connection pipe

Table 3-4.5: Summary of permitted refrigerant piping lengths and level differences

			Permitted values	Piping in Figure 3-4.6
Piping lengths	Total piping length		≤ 1000 m	L1+ 2 x Σ{L2 to L7} + Σ{a to n}
	Piping between farthest VRF indoor unit and outdoor unit or the last multi-outdoor piping branch [2]	Actual length	≤ 175 m	L1 + L2 + L4 + f + i
		Equivalent length	≤ 200 m	
	Piping between farthest VRF indoor unit or AHU and first branch joint[3]		≤ 40 m	L2 + L4 + f + i
	Piping between outdoor unit and outdoor branch joint		≤ 10 m	g1 ≤ 10 m; g2+G1 ≤ 10 m; g3 + G1 ≤ 10 m
Level differences	Largest level difference between VRF indoor unit or AHU and outdoor unit[4]	Outdoor unit is above	≤ 50 m	
		Outdoor unit is below	≤ 40 m	
	Largest level difference between standard indoor units or AHUs		≤ 30 m	

Notes:
1. Refer to Requirement 1, above.
2. Refer to Requirement 2, above.
3. Refer to Requirement 3, above.
4. Refer to Requirement 4, above.

4.4 Selecting Piping Diameters

Tables 3-4.6 to 3-4.11 specify the required pipe diameters for the indoor and outdoor piping.

Figure 3-4.5: Selecting piping diameters

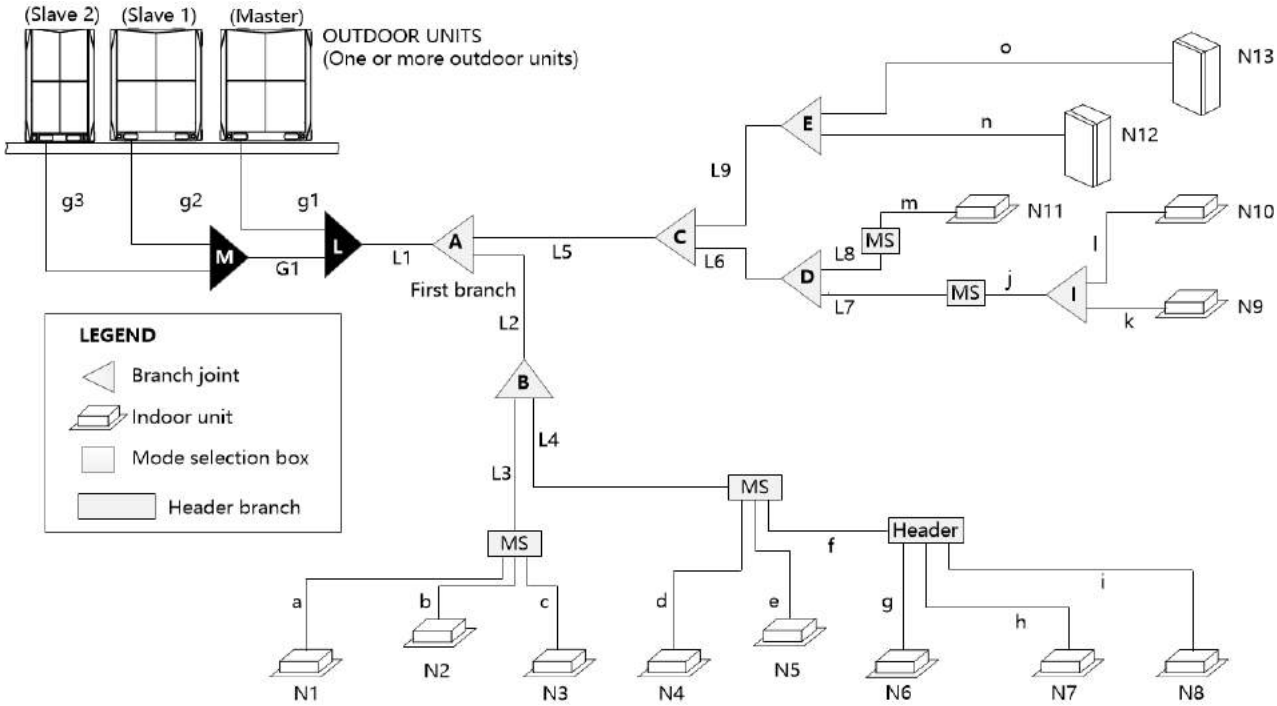

Legend	
g1, g2, g3, G1	Main pipe
L, M	Outdoor unit connection pipe
L1	Outdoor unit branch joint
L2 to L9	Main pipe
A to E	Indoor unit main pipe
I	Branch joint between main pipe and MS or HT hydro module
a to o	Branch joint between MS and indoor unit
N1 to N11	VRF indoor unit
N12, N13	HT hydro module

Figure 3-4.6: Outdoor connection pipes

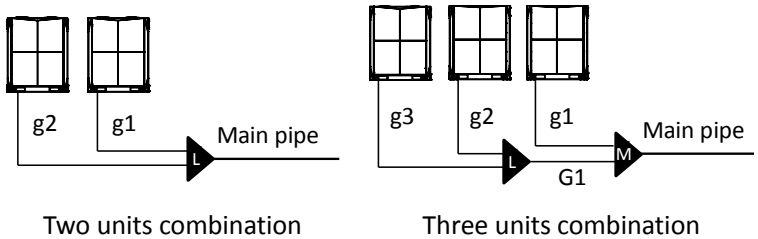

Table 3-4.6: Outdoor unit connection pipes (g1 to g3, G1)

Pipes	Outdoor unit capacity (HP)	Pipe Diameter (mm OD)		
		Liquid pipe	Low Pressure Gas Pipe	High Pressure Gas Pipe
g1 to g3	8	Φ9.53	Φ19.1	Φ15.9
	10	Φ9.53	Φ22.2	Φ19.1
	12	Φ12.7	Φ28.6	Φ19.1
	14-16	Φ12.7	Φ28.6	Φ22.2
	18	Φ15.9	Φ28.6	Φ22.2
G1	≤ 24	Φ15.9	Φ34.9	Φ28.6
	26-34	Φ19.1	Φ34.9	Φ28.6
	36	Φ19.1	Φ41.3	Φ28.6
	≥ 38	Φ19.1	Φ41.3	Φ34.9

Table 3-4.7: Outdoor unit branch joint kits (L, M)

Number of outdoor units	Branch joint kit
2	L: FQZHW-02SB1
3	L+M: FQZHW-03SB1

Table 3-4.8: Main pipe (L1) and first branch joint (A)

Outdoor Unit Capacity (HP)	Pipe Diameter (mm OD)			
	Liquid pipe	Low Pressure Gas Pipe	High Pressure Gas Pipe	Branch joint kit
8	Φ9.53	Φ19.1	Φ15.9	FQZHN-02SB1
10	Φ9.53	Φ22.2	Φ19.1	FQZHN-02SB1
12	Φ12.7	Φ28.6	Φ19.1	FQZHN-03SB1
14-16	Φ12.7	Φ28.6	Φ22.2	FQZHN-03SB1
18	Φ15.9	Φ28.6	Φ22.2	FQZHN-03SB1
20-22	Φ15.9	Φ28.6	Φ28.6	FQZHN-03SB1
24	Φ15.9	Φ34.9	Φ28.6	FQZHN-04SB1
26-34	Φ19.1	Φ34.9	Φ28.6	FQZHN-04SB1
36	Φ19.1	Φ41.3	Φ28.6	FQZHN-05SB1
38-54	Φ19.1	Φ41.3	Φ34.9	FQZHN-05SB1

Notes:

1. When the equivalent piping length from outdoor units to the farthest indoor unit exceed 90 m, or the level difference is greater than 50 m (outdoor unit is above) or 40 m (outdoor unit is below), the liquid pipe of the main pipe (L1) should be increased as Table 3-4.2.

Table 3-4.9: Indoor unit main pipes (L2 to L8) and indoor unit branch joint kits

Total capacity of downstream indoor units (× 100W)	Pipe Diameter (mm OD)			Branch joint kit
	Liquid pipe	Low Pressure Gas Pipe	High Pressure Gas Pipe	
< 168	Ø9.53	Φ15.9	Φ12.7	FQZHN-01SB1
168 ≤ A < 224	Ø9.53	Φ19.1	Φ15.9	FQZHN-02SB1
224 ≤ A < 330	Ø9.53	Φ22.2	Φ19.1	FQZHN-02SB1
330 ≤ A < 470	Φ12.7	Φ28.6	Φ19.1	FQZHN-03SB1
470 ≤ A < 710	Φ15.9	Φ28.6	Φ28.6	FQZHN-03SB1
710 ≤ A < 1040	Φ19.1	Φ34.9	Φ28.6	FQZHN-04SB1
1040 ≤ A	Φ19.1	Φ41.3	Φ28.6	FQZHN-05SB1

Notes:

1. Choose indoor main pipes from the above table in accordance with total downstream indoor capacity, which is the total capacity of all the indoor units, exclude HT hydro module, connected downstream.
2. If there are HT hydro module connected to the system, the pipes (L9, n, o), only HT hydro module connected downstream, are selected according to Table 3-4.10.

Table 3-4.10: HT hydro module pipes (L9, n, o) and branch joint kits (only HT hydro module connected downstream)

Total capacity of downstream HT hydro module (× 100W)	Pipe Diameter (mm OD)		Branch joint kit
	Liquid pipe	Gas Pipe	
< 168	Ø9.53	Φ12.7	FQZHN-01SB1
168 ≤ B < 224	Ø9.53	Φ15.9	FQZHN-02SB1
224 ≤ B < 330	Ø9.53	Φ19.1	FQZHN-02SB1
330 ≤ B < 470	Φ12.7	Φ19.1	FQZHN-03SB1
470 ≤ B < 710	Φ15.9	Φ28.6	FQZHN-03SB1
710 ≤ B < 1040	Φ19.1	Φ28.6	FQZHN-04SB1
1040 ≤ B	Φ19.1	Φ28.6	FQZHN-05SB1

Notes:

1. One or more HT hydro modules can be connected in the V6R system, HT hydro modules should be connecting to the first branch joint or its downstream branch joints, never connecting to the MS or header branches.
2. Choose HT hydro module pipes from the above table in accordance with total downstream HT hydro module capacity, which is the total capacity of all the HT hydro module connected downstream.

Table 3-4.11: Indoor unit auxiliary pipes (a to m) and branch joint kits between MS and downstream indoor units

Capacity of indoor units (× 100W)	Pipe Diameter (mm OD)		Branch joint kit
	Liquid pipe (mm)	Gas pipe (mm)	
A < 56	Φ6.35	Φ12.7	FQZHN-01D
56 ≤ A < 160	Φ9.53	Φ15.9	FQZHN-01D
160 ≤ A <224	Φ9.53	Φ19.1	FQZHN-01D
224 ≤ A ≤ 280	Φ9.53	Φ22.2	FQZHN-02D

Notes:

1. The branch joint kits are required only when two or more indoor units are connected to 1 port of MS.
2. Indoor units with a capacity more than 16 kW should be connected to 2 ports merged in a multi MS unit using branch joints (FQZHN-09A). Merged ports must start on an odd number and with the next sequential even number (i.e. 1, 2 or 3, 4 and so on). And if the single MS is used, the downstream Indoor units can be up to a maximum capacity of 32 kW.

4.5 Mode Selection Box Selection and Piping

MS should be selected according to Table 3-4.12.

Table 3-4.12: MS box

Model name		MS01/N1-D	MS04/N1-D	MS06/N1-D	MS08/N1-D	MS10/N1-D	MS12/N1-D
Max. number of indoor unit groups		1	4	6	8	10	12
Max. number of units per group		8	5	5	5	5	5
Max. number of downstream indoor units		8	20	30	40	47	47
Max. capacity of each group of indoor units	kW	32	16	16	16	16	16
Total capacity of downstream indoor units	kW	≤32	≤49	≤63	≤85	≤85	≤85

Table 3-4.13: Pipe size of MS

Model			MS01/N1-D	MS04/N1-D	MS06/N1-D	MS08/N1-D	MS10/N1-D	MS12/N1-D
Connect to outdoor unit	Liquid pipe	mm	Ø9.53	Ø15.9	Ø15.9	Ø15.9	Ø15.9	Ø15.9
	Low pressure gas pipe	mm	Ø15.9	Ø28.6	Ø28.6	Ø28.6	Ø28.6	Ø28.6
	High pressure gas pipe	mm	Ø12.7	Ø22.2	Ø22.2	Ø22.2	Ø22.2	Ø22.2
Connect to indoor unit	Liquid pipe	mm	Ø9.53	Ø9.53	Ø9.53	Ø9.53	Ø9.53	Ø9.53
	Gas pipe	mm	Ø15.9	Ø15.9	Ø15.9	Ø15.9	Ø15.9	Ø15.9

MS01 connection

Figure 3-4.7: MS Connecting to indoor unit ≤ 32kW

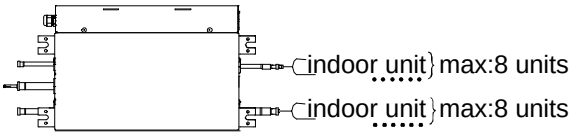

Notes:

1. If auto mode funition is required, only one indoor unit is can be connected.
2. All the indoor units connect to the same MS01 should operate the same mode to avoid mode conflict.

MS04-12 connection

Figure 3-4.8: MS Connecting to indoor unit ≤ 16kW

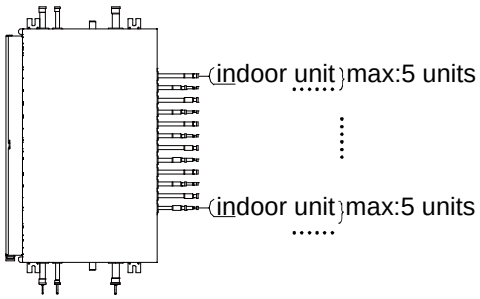

Figure 3-4.9: MS Connecting to indoor unit 16-28KW

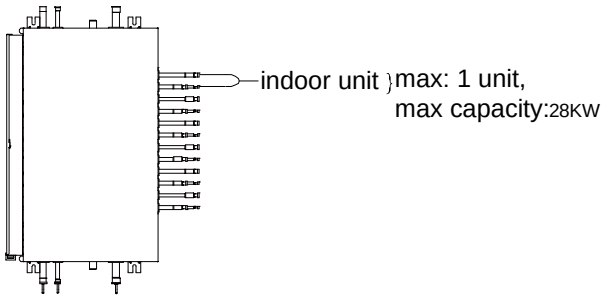

Notes:

1. If auto mode funition is required, only one indoor unit is can be connected to one branch.
2. All the indoor units connect to the same MS branch should operate the same mode to avoid mode conflict.
3. Use optional branch pipe (Model:FQZHN-09A) and merge the two ports to one, then large capacity (16-28KW) indoor unit can be connect to MS04-12.
4. The allowed ports merge: No.1&No.2, No.3& No.4, No.5&No.6, No.7&No.8, No.9&No.10, No.11&No.12. Other ports is not allowed to merge.

Figure 3-4.10: Right ports merge example

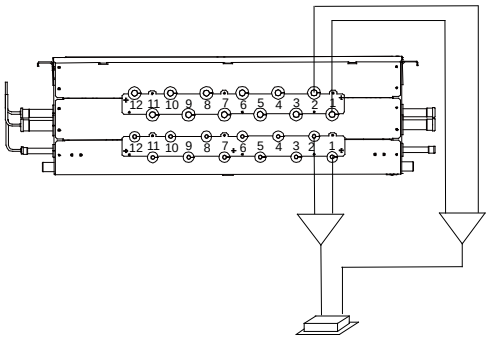

Figure 3-4.11: Wrong ports merge example

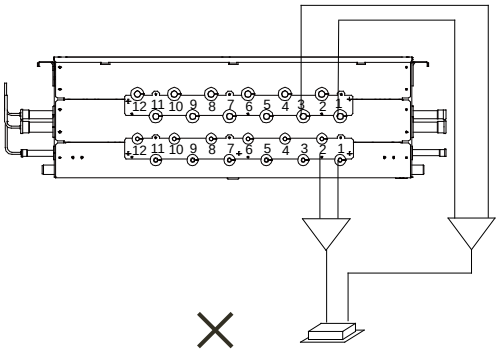

4.6 Selection Example

The example below illustrates the piping selection procedure for a system consisting of three outdoor units (16HP + 14HP + 12HP) and 11 VRF indoor units and 2 HT hydro modules. The system's equivalent length of all liquid pipes is not in excess of 90m. Rooms install indoor unit N9, N10 and N11 need add refrigerant leak detection sensor.

Figure 3-4.12: Refrigerant piping selection example

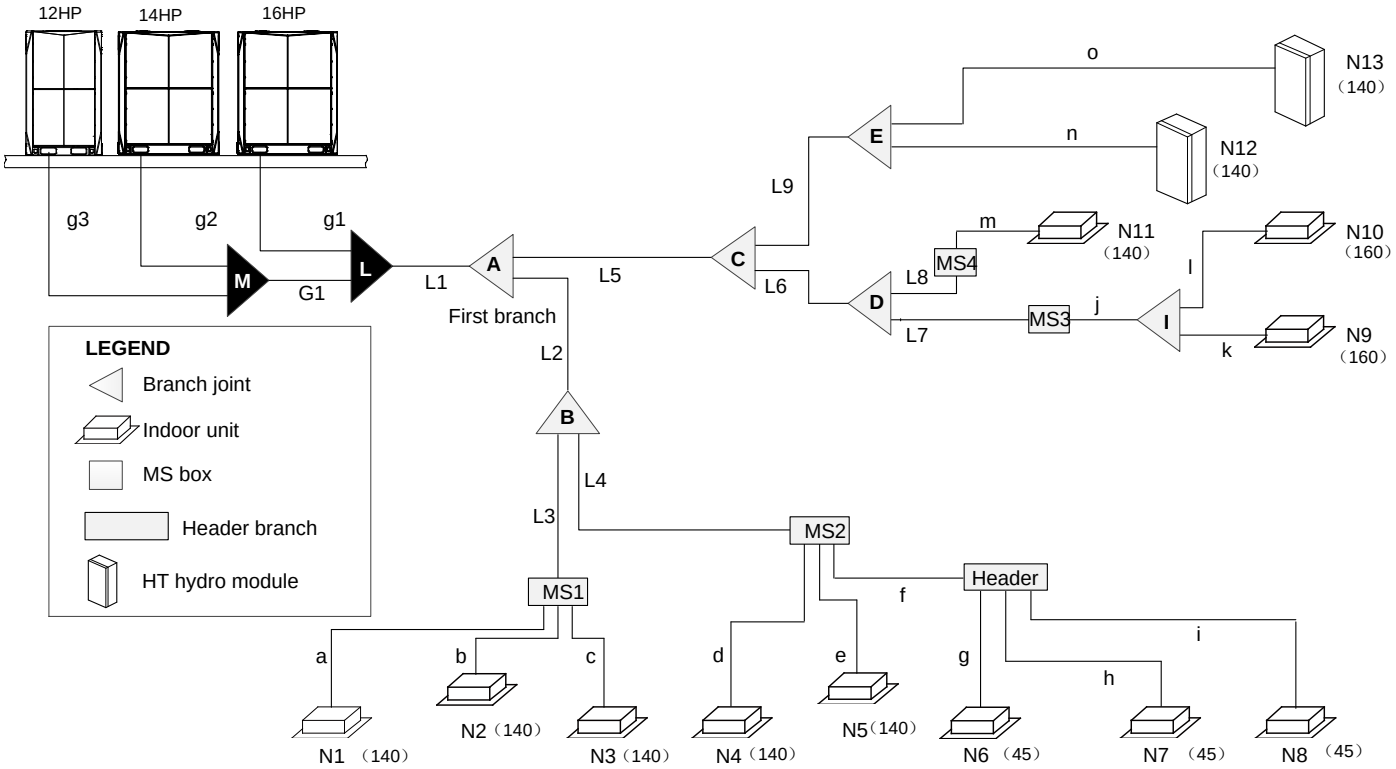

Legend	
L1	Main pipe
L2 to L9	Indoor main pipes
a to 0	Indoor auxiliary pipes
A to E	Indoor branch joints
L, M	Outdoor branch joints
g1 to g3, G1	Outdoor connection pipes
N12 to N13	Hydronic module
MS1 to MS4	Mode switch box
Figures in parentheses indicate indoor unit capacity indexes.	

Step 1: Select indoor auxiliary pipes

- Indoor units N1 to N5 and N11 are of capacity 14kW. Refer to Table 3-4.11. Indoor auxiliary pipes a to e and m are Φ15.9 / Φ9.53.
- Indoor units N6 and N8 are of capacity 4.5kW. Refer to Table 3-4.11. Indoor auxiliary pipes g and l are Φ12.7 / Φ6.35.

- Indoor units N9 to N10 are of capacity 16kW. Refer to Table 3-4.11. Indoor auxiliary pipes g and l are Φ15.9 / Φ9.53.
- HT Hydro modules N12 to N13 are of capacity 14kW. Refer to Table 3-4.10. Indoor auxiliary pipes n and o are Φ15.9 / Φ9.53.

Step 2: Select indoor branch joints between MS box and indoor units

- Refer to Table 3-4.8. Branch joint I are FQZHN-01D.

Step 3: Select indoor main pipes and MS box and indoor branch joints B to E

- The indoor units (N1 to N3) downstream of MS box MS1 have total capacity of 14 x 3 = 42kW. Refer to Table 3-4.9. Indoor main pipe L3 is Φ12.7 / Φ28.6 / Φ19.1. Refer to Table 3-4.12. MS box MS1 is MS04/N1-D.
- The indoor units (N4 to N8) downstream of MS box MS2 have total capacity of 14 x 2 +4.5 x 3= 41.5kW. Refer to Table 3-4.9. Indoor main pipe L7 is Φ12.7 / Φ28.6 / Φ19.1. Refer to Table 3-4.12. MS box MS1 is MS04/N1-D.
- The indoor units (N9 to N10) downstream of MS box MS3 have total capacity of 16 x 2 = 32kW. Refer to Table 3-4.9. Indoor main pipe L3 is Φ9.53 / Φ22.2 / Φ19.1. Refer to Table 3-4.12. MS box MS3 is MS01/N1-D.
- The indoor units (N11) downstream of MS box MS4 have total capacity 14kW. Refer to Table 3-4.9. Indoor main pipe L8 is Φ9.53 / Φ15.9 / Φ12.7. Refer to Table 3-4.12. MS box MS3 is MS01/N1-D.

Step 4: Select main pipe and indoor branch joint A

- The total capacity of the outdoor units is 16 + 14 + 12 = 42HP. The system's equivalent total piping length is not in excess of 90m. Refer to Tables 3-4.4. Main pipe L1 is Φ19.1 / Φ34.9/ Φ41.3. Indoor branch joint A is FQZHN-05SB1.

Step 5: Select outdoor connection pipes and outdoor branch joints

- The master unit is 16HP and the slave units are 14HP and 12HP. Refer to Table 3-4.6. Outdoor connection pipes g1 and g2 are Φ12.7/ Φ22.2 /Φ28.6 and outdoor connection pipe g3 is Φ12.7/ Φ19.1 /Φ28.6.
- Refer to Table 3-4.6. Outdoor connection pipe G1 is Φ19.1 /Φ28.6/ Φ34.9.
- There are three outdoor units in the system. Refer to Table 3-4.7. Outdoor branch joints L and M are FQZHW-03SB1.

4.7 Branch Joints

Branch joint design should take account of the following:

- U-shaped branch joints should be used – tee joints are not suitable. Branch joint dimensions are given in Tables 3-4.14 and 3-4.15.
- To avoid accumulation of oil in the outdoor units, outdoor branch joints should be installed horizontally and must not be higher than the outdoor unit refrigerant outlets. Refer to Figure 3-5.9 in Part 3, 5.6 “Branch Joints”. Indoor branch joints may be installed either horizontally or vertically.
- To ensure even distribution of refrigerant, branch joints should not be installed within 500mm of a 90° bend, another branch joint or the straight section of piping leading to an indoor unit, with the minimum 500mm being measured from the point where the branch joint is connected to the piping, as shown in Figure 3-4.13.

Figure 3-4.13: Branch joint spacing and separation from bends (unit: mm)

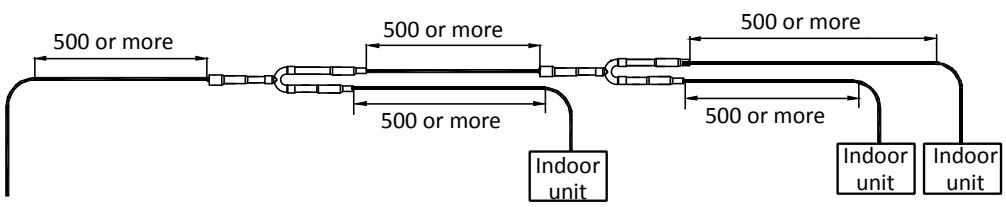

Table 3-4.14: Indoor branch joint dimensions (unit: mm)

Model	Low-pressure gas side joints	High-pressure gas side joints	Liquid side joints
FQZHN-01SB	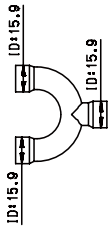	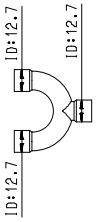	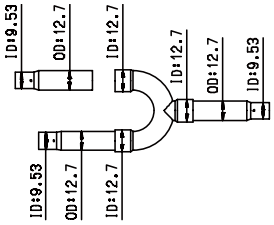
FQZHN-02SB	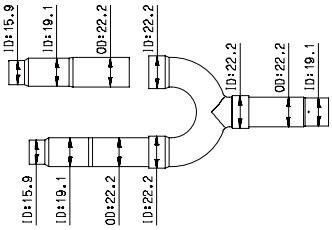	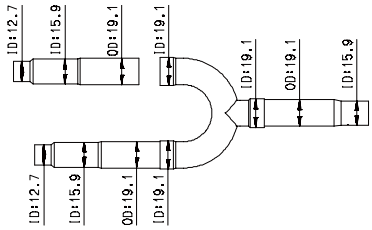	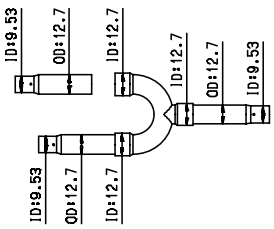
FQZHN-03SB	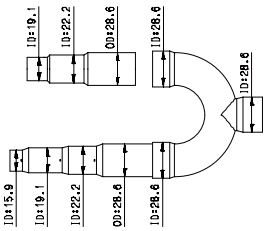	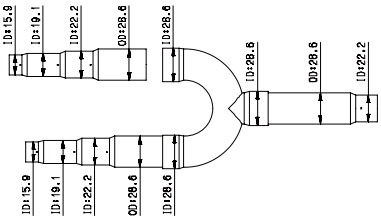	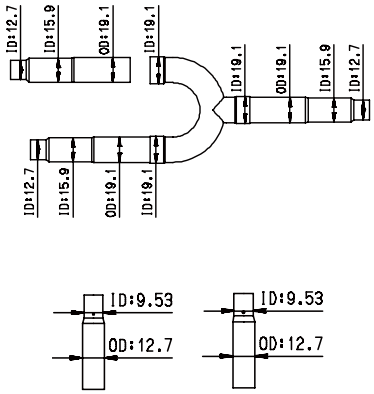
FQZHN-04SB	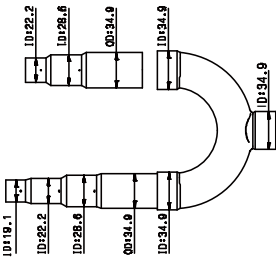	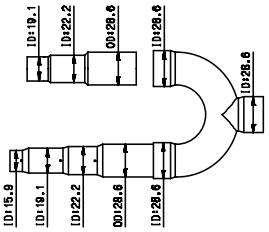	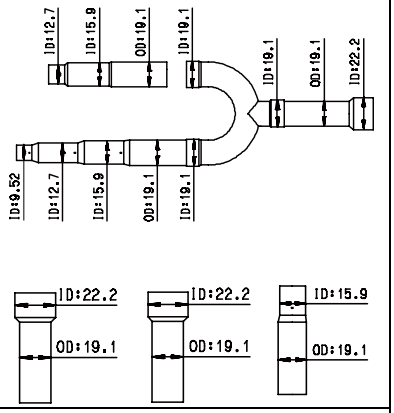
FQZHN-05SB	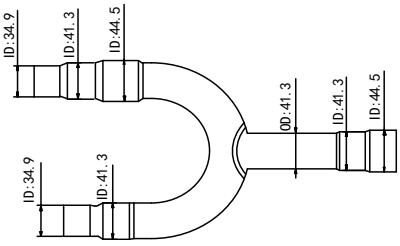	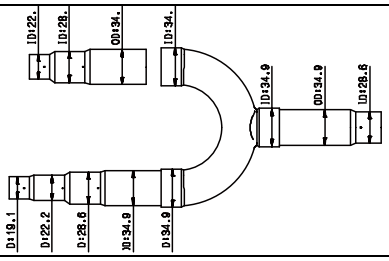	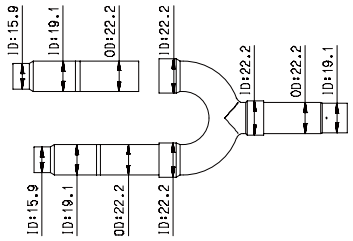

Table 3 4.15: Outdoor branch joint dimensions (unit: mm)

-

Model	Low-pressure gas side joints	High-pressure gas side joints	Liquid side joints
FQZHW -02SB	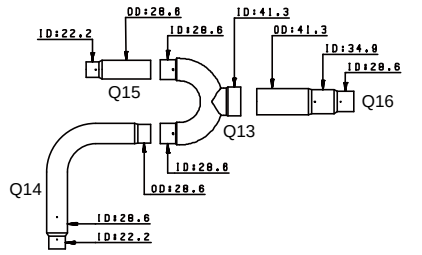	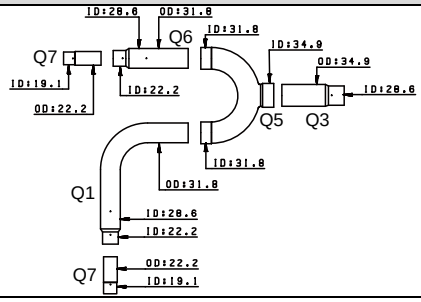	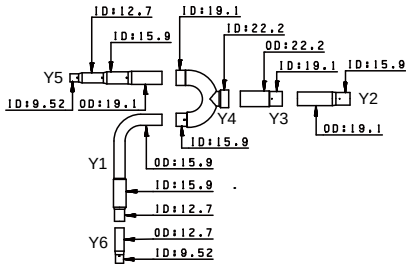
FQZHW -03SB	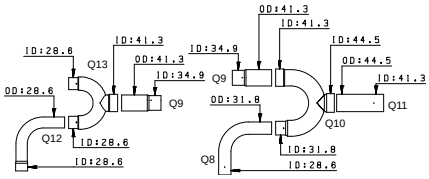	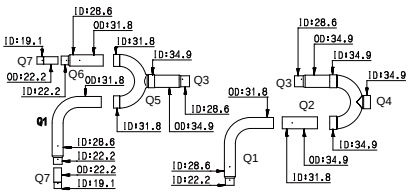	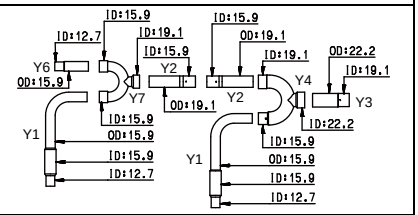

4.8 Refrigerant Leakage Precautions

R410A refrigerant is not flammable in air at temperatures up to 100°C at atmospheric pressure and is generally considered a safe substance to use in air conditioning systems. Nevertheless, precautions should be taken to avoid danger to life in the unlikely event of a major refrigerant leakage. Precautions should be taken in accordance with all applicable legislation. Where no applicable legislation exists, the following may be used as a guide:

- Air conditioned rooms should be large enough that if leakage of all the refrigerant in the system occurs, the concentration of the refrigerant in the room does not reach a level dangerous to health.
- A critical concentration (at which point R410A becomes dangerous to human health) of 0.44 kg/m^3 can be used.
- The potential concentration of refrigerant in a room following a leak can be calculated as follows:
  - Calculate the total amount in of refrigerant in the system ("A") as the nameplate charge (the charge in the system when delivered from the factory) plus the additional charge added as per Part 3, 8.1 "Calculating Additional Refrigerant Charge".
  - Calculate the total volume ("B") of the smallest room into which refrigerant could potentially leak.
  - Calculate the potential refrigerant concentration as A divided by B.
  - If A/B is not less than 0.44 kg/m^3, countermeasures such installing mechanical ventilators (either ventilating regularly or controlled by refrigerant leakage detectors) should be taken.
- Since R410A is heavier than air, particular consideration should be given to leak scenarios in basement rooms.

Figure 3-4.14: Potential refrigerant leak scenario

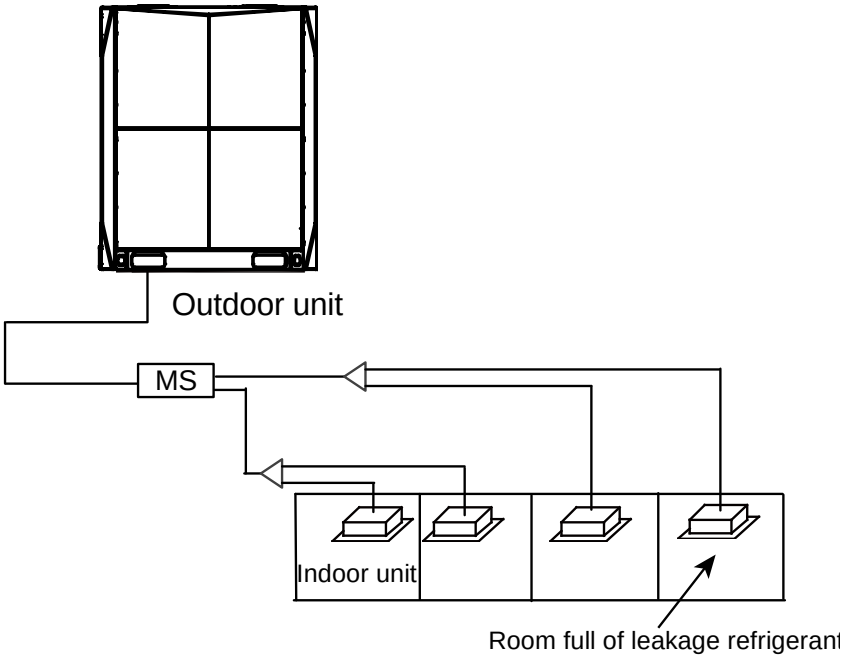

Figure 3-4.15: Mechanical ventilator controlled by refrigerant leak detector

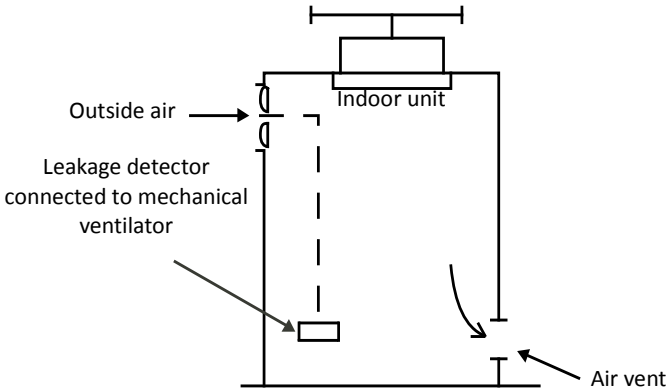

5 Refrigerant Piping Installation

5.1 Procedure and Principles

5.1.1 Installation procedure

Notes for installers

Installation of the refrigerant piping system should proceed in the following order:

Pipe insulation → Pipe brazing and installation → Pipe flushing → Gastightness test → Joint insulation → Vacuum drying

Note: Pipe flushing should be performed once the brazed connections have been completed with the exception of the final connections to the indoor units. That is, flushing should be perfomed once the outdoor units have been connected but before the indoor units are connected.

5.1.2 Three principles for refrigerant piping

	Reasons	Measures
CLEAN	Particles such as oxide produced during brazing and/or building dust can lead to compressor malfunction	▪ Seal piping during storage[1] ▪ Flow nitrogen during brazing[2] ▪ Pipe flushing[3]
DRY	Moisture can lead to ice formation or oxidization of internal components leading to abnormal operation or compressor damage	▪ Pipe flushing[3] ▪ Vacuum drying[4]
SEALED	Imperfect seals can lead to refrigerant leakage	▪ Pipe manipulation[5] and brazing[2] techniques ▪ Gastightness test[6]

Notes:
1. See Part 3, 5.2.1 “Pipe delivery, storage and sealing”.
2. See Part 3, 5.5 “Brazing”.
3. See Part 3, 5.8 “Pipe Flushing”.
4. See Part 3, 5.10 “Vacuum Drying”.
5. See Part 3, 5.3 “Manipulating Copper Piping”.
6. See Part 3, 5.9 “Gastightness Test”.

5.2 Storing Copper Piping

5.2.1 Pipe delivery, storage and sealing

Notes for installers

- Ensure that piping does not get bent or deformed during delivery or whilst stored.
- On construction sites store piping in a designated location.
- To prevent dust or moisture entering, piping should be kept sealed whilst in storage and until it is about to be connected. If piping is to be used soon, seal the openings with plugs or adhesive tape. If piping is to be stored for a long time, charge the piping with nitrogen at 0.2-0.5MPa and seal the openings by brazing.
- Storing piping directly on the ground risks dust or water ingress. Wooden supports can be used to raise piping off the ground.
- During installation, ensure that piping to be inserted through a hole in a wall is sealed to ensure dust and/or fragments of wall do not enter.
- Be sure to seal piping being installed outdoors (especially if being installed vertically) to prevent rain entering.

5.3 Manipulating Copper Piping

5.3.1 De-oiling

Notes for installers

- Lubrication oil used during some copper pipe manufacturing processes can cause deposits to form in R410A refrigerant systems, causing system errors. Oil-free copper piping should therefore be selected. If ordinary (oily) copper piping is used, it must be cleaned with gauze dipped in tetrachloroethylene solution prior to installation.

Caution

- Never use carbon tetrachloride (CCl_4) for pipe cleansing or flushing, as doing so will seriously damage the system.

5.3.2 Cutting copper piping and removing burrs

Notes for installers

- Use a pipe cutter rather than a saw or cutting machine to cut piping. Rotate the piping evenly and slowly, applying even force to ensure that the piping does not become deformed during cutting. Using a saw or cutting machine to cut piping runs the risk of copper shavings entering the piping. Copper shavings are difficult to remove and pose a serious risk to the system if they enter the compressor or block the throttling unit.
- After cutting using a pipe cutter, use a reamer/scraper to remove any burrs that have formed at the opening, keeping the opening of the piping downwards to avoid copper shavings from entering the piping.
- Remove burrs carefully to avoid scratches, which may prevent a proper seal being formed and lead to refrigerant leakage.

5.3.3 Expanding copper piping ends

Notes for installers

- Ends of copper piping can be expanded so that another length of piping can be inserted and the joint brazed.
- Insert the expanding head of the pipe expander into the pipe. After completing pipe expansion, rotate the copper pipe a few degrees to rectify the straight line mark left by the expanding head.

Caution

- Ensure that the expanded section of piping is smooth and even. Remove any burrs that remain after cutting.

Figure 3-5.1: Expanding copper piping ends

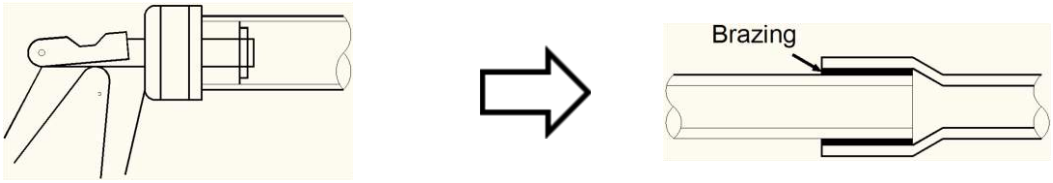

5.3.4 Flared joints

Flared joints should be used where a screw thread connection is required.

Notes for installers

- Before flaring 1/2H (half hard) piping, anneal the end of the pipe to be flared.
- Remember to place the flare nut on the piping before flaring.
- Ensure the flared opening is not cracked, deformed or scratched, otherwise it will not form a good seal and refrigerant leakage may occur.
- The diameter of the flared opening should be within the ranges specified in Table 3-5.1. Refer to Figure 3-5.2.

Table 3-5.1: Flared opening size ranges

Pipe (mm)	Flared opening diameter (A) (mm)
Φ6.35	8.7 - 9.1
Φ9.53	12.8 - 13.2
Φ12.7	16.2 - 16.6
Φ15.9	19.3 - 19.7
Φ19.1	23.6 - 24.0

Figure 3-5.2: Flared opening

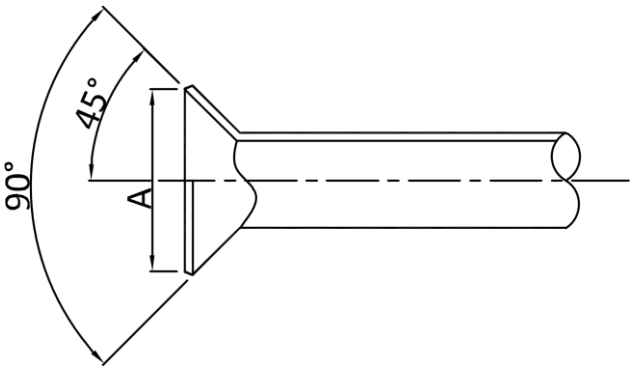

- When connecting a flared joint, apply some compressor oil to the inner and outer surfaces of the flared opening

5.3.5 Bending piping

Bending copper piping reduces the number of brazed joints required and can improve quality and save material.

Notes for installers

Piping bending methods

- Hand bending is suitable for thin copper piping (Φ6. 35mm - Φ12. 7mm).
- Mechanical bending (using a bending spring, manual bending machine or powered bending machine) is suitable for a wide range of diameters (Φ6. 35mm - Φ54.0mm).

Caution

- When using a spring bender, ensure that the bender is clean before inserting it in the piping.
- After bending a copper pipe, ensure that there are no wrinkles or deformation on either side of the pipe.
- Ensure that bend angles do not exceed 90°, otherwise wrinkles may appear on the inner side of the pipe, and the pipe may buckle or crack. Refer to Figure 3-5.3.
- Do not use a pipe that has buckled during the bending process; ensure that the cross section at the bend is greater than 2/3 of the original area.

Figure 3-5.3: Pipe bending in excess of 90°

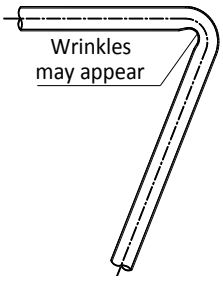

5.4 Refrigerant Piping Supports

When the air conditioning is running, the refrigerant piping will deform (shrink, expand, droop). To avoid damage to piping, hangers or supports should be spaced as per the criteria in the Table 3-5.2. In general, the gas and liquid pipes should be suspended in parallel and the interval between support points should be selected according to the diameter of the gas pipe.

Table 3-5.2: Refrigerant piping support spacings

Pipe (mm)	Interval between support points (m)	
	Horizontal Piping	Vertical Piping
< Φ20	1	1.5
Φ20 – Φ40	1.5	2
> Φ40	2	2.5

Suitable insulation should be provided between the piping and the supports. If wooden dowels or blocks are to be used, use wood that has undergone preservative treatment.

Changes in refrigerant flow direction and refrigerant temperature result in movement, expansion and shrinkage of the refrigerant piping. Piping should therefore not be fixed too tightly, otherwise stress concentrations may occur in the piping, with the potential for rupturing.

5.5 Brazing

Care must be taken to prevent oxide forming on the inside of copper piping during brazing. The presence of oxide in a refrigerant system adversely affects the operation of valves and compressors, potentially leading to low efficiency or even compressor failure. To prevent oxidation, during brazing nitrogen should be flowed through the refrigerant piping.

Notes for installers

Warning

- Never flow oxygen through piping as doing so aids oxidation and could easily lead to explosion and as such is extremely dangerous.
- Take appropriate safety precautions such as having a fire extinguisher to hand whilst brazing.

Flowing nitrogen during brazing

- Use a pressure reducing valve to flow nitrogen through copper piping at 0.02-0.03MPa during brazing.
- Start the flow before brazing starts and ensure that the nitrogen continuously passes through the section being brazed until the brazing is complete and the copper has cooled down completely.

Figure 3-5.4: Flowing nitrogen through piping during brazing

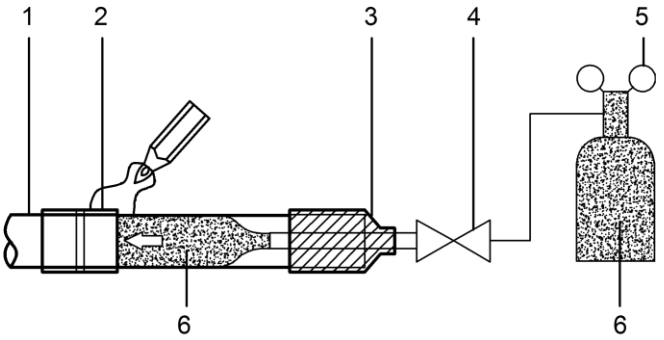

Legend	
1	Copper piping
2	Section being brazed
3	Nitrogen connection
4	Hand valve
5	Pressure-reducing valve
6	Nitrogen

- When joining a shorter section of piping to a longer section, flow nitrogen from the shorter side to allow better displacement of air with nitrogen.
- If the distance from the point where nitrogen enters the piping to the joint to be brazed is long, ensure that the nitrogen is flowed for sufficient time to discharge all the air from the section to be brazed before commencing brazing.

Figure 3-5.5: Flowing nitrogen from shorter side during brazing

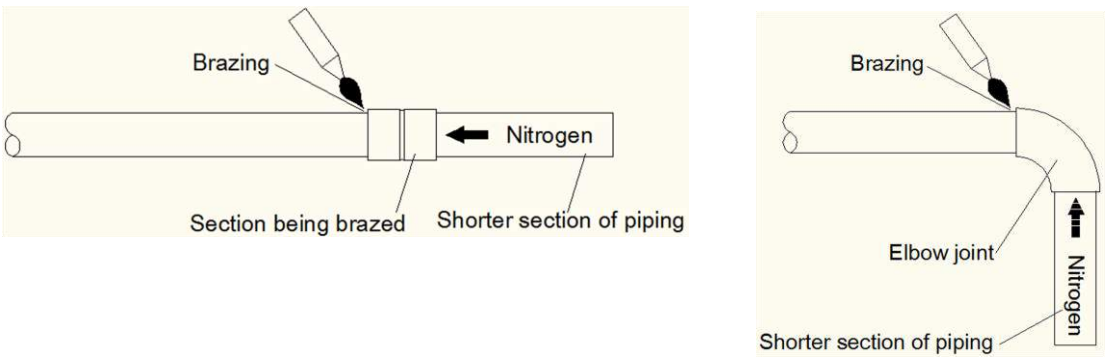

Box continued on next page ...

... box continued from previous page

Piping orientation during brazing

Brazing should be conducted downwards or horizontally to avoid filler leakage.

Figure 3-5.6: Piping orientation during brazing

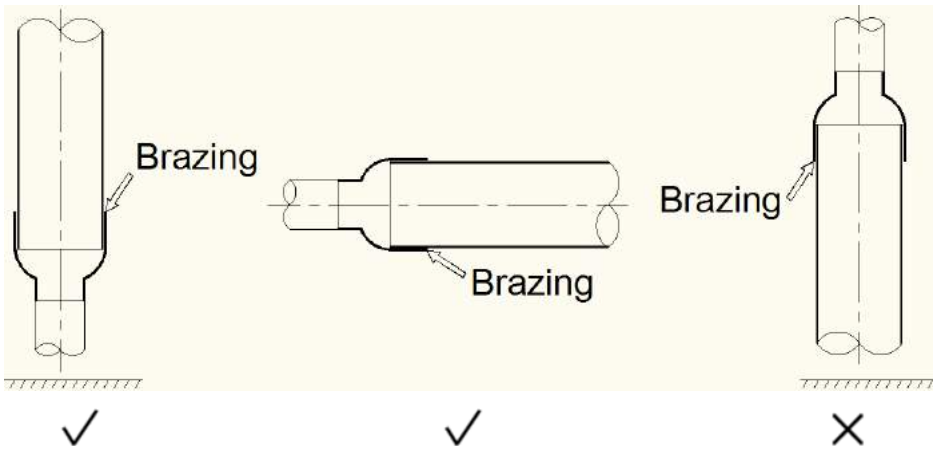

Piping overlap during brazing

Table 3-5.3 specifies the minimum permissible piping overlap and the range of permissible gap sizes for brazed joints on piping of different diameters. Refer also to Figure 3-5.7.

Figure 3-5.7: Piping overlap and gap for brazed joints

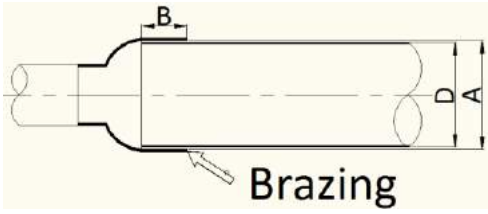

Legend	
A	Inner diameter of larger pipe
D	Outer diameter of smaller pipe
B	Inlaid depth (overlap)

Table 3-5.3: Piping overlap and gap for brazed joints[1]

D (mm)	Minimum permissible B (mm)	Permissible A – D (mm)
5 < D < 8	6	0.05 - 0.21
8 < D < 12	7	
12 < D < 16	8	0.05 - 0.27
16 < D < 25	10	
25 < D < 35	12	0.05 - 0.35
35 < D < 45	14	

Notes:

1. A, B, D refer to the dimensions shown in Figure 3-5.7.

Filler

- Use a copper/phosphorus brazing alloy (BCuP) filler that does not require flux.
- Do not use flux. Flux can cause corrosion of piping and can affect the performance of compressor oil.
- Do not use anti-oxidants when brazing. Residue can clog piping and damage components.

5.6 Branch Joints

Notes for installers

- Use U-shaped branch joints as specified on the construction drawings – do not replace U-shaped branch joints with tee joints.
- To avoid accumulation of oil in the outdoor units, outdoor branch joints should be installed horizontally and must not be higher than the outdoor unit refrigerant outlets. Refer to Figure 3-5.9.
- Indoor branch joints may be installed either horizontally or vertically. Horizontal branch joints must be installed at an angle to the horizontal not exceeding 10° in order to avoid uneven distribution of refrigerant and possible malfunction. Refer to Figure 3-5.8.

Figure 3-5.8: Branch joint orientation

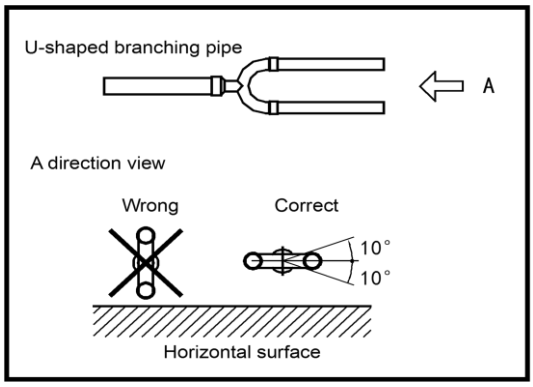

Figure 3-5.9: Installation of outdoor branch joints

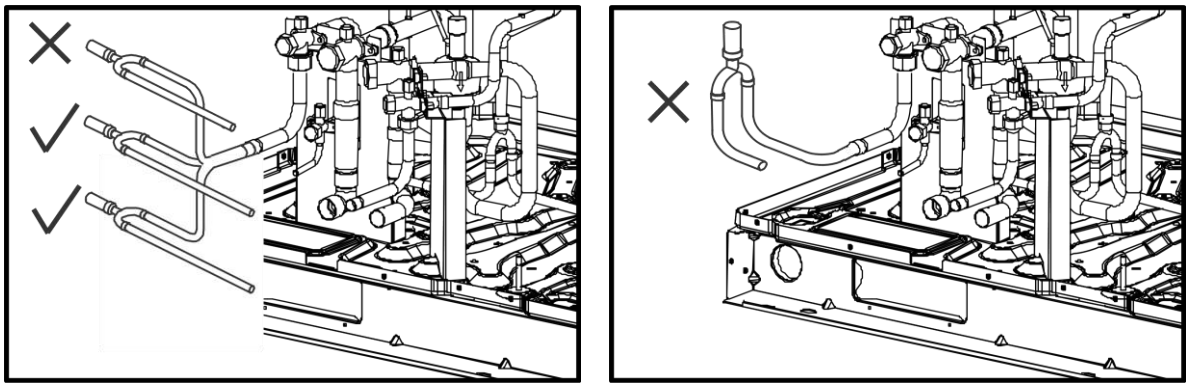

- To ensure even distribution of refrigerant, a limitation is placed on how close branch joints may be installed to bends, other branch joints and the straight sections of piping leading to indoor units. Refer to Part 3, 0 “Branch Joints”.

5.7 Piping Connections between Outdoor Units

The piping connecting the outdoor units should be horizontal and must not be higher than the refrigerant outlets. If necessary, to avoid obstacles the piping may be vertically offset below the outlets. When inserting a vertical offset to avoid an obstacle, the whole outdoor piping should be offset, rather than just the section adjacent to the obstacle. Refer to Figure 3-5.10.

Figure 3-5.10: Piping connections between outdoor units

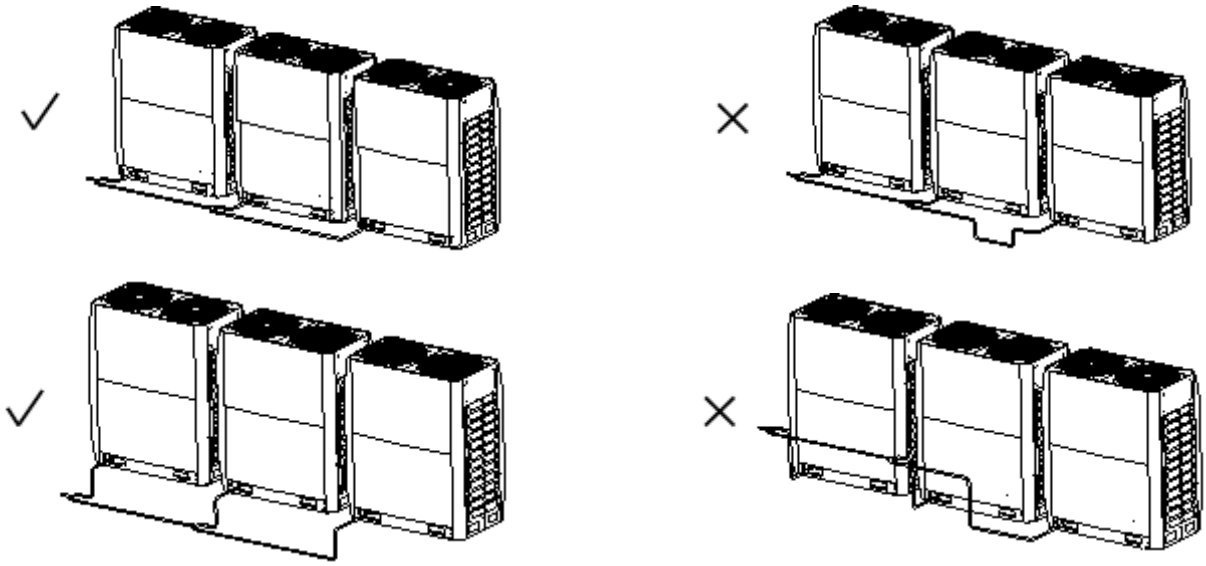

Outdoor piping should be installed in a metal casing to protect against exposure to sunlight, rain, wind and other potential causes of damage.

5.8 Pipe Flushing

5.8.1 Purpose

To remove dust, other particles and moisture, which could cause compressor malfunction if not flushed out before the system is run, the refrigerant piping should be flushed using nitrogen. As described in Part 3, 5.1.1 “Installation procedure”, pipe flushing should be performed once the piping connections have been completed with the exception of the final connections to the indoor units and to the MS box. That is, pipe flushing should be performed before connecting refrigerant piping to MS box and indoor units to prevent impurities from blocking the MS box and indoor units.

5.8.2 Procedure

Notes for installers

Warning

Only use nitrogen for flushing. Using carbon dioxide risks leaving condensation in the piping. Oxygen, air, refrigerant, flammable gases and toxic gases must not be used for flushing. Use of such gases may result in fire or explosion.

Procedure

1. Braze the refrigerant piping and branch joints between outdoor unit(s) and MS box (piping (a) in Fig. 5-16), but not connect piping (a) to MS box.
2. Flush piping (a) with nitrogen, and then connect piping (a) to MS box according to the description of 5.4.8.
3. Braze the refrigerant piping and branch joints between MS and indoor units (piping (b) in Figure 5.16), but not connect piping (b) to MS box.
4. Flush piping (b) with nitrogen, and then connect piping (b) to MS box according to the description of 5.4.8.
5. Flush all refrigerant piping from outdoor unit stop valves to ensure no impurities remained.

Figure 3-5.11: Pipe flushing using nitrogen

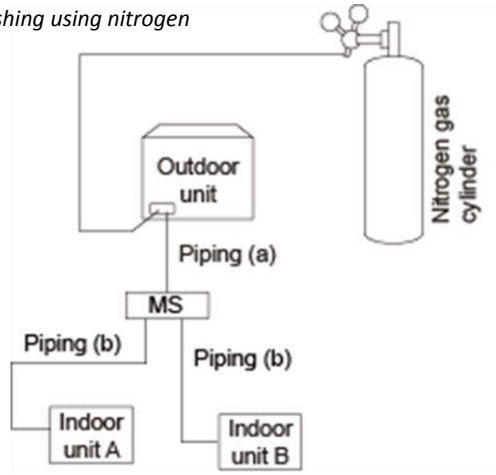

Pipe Flush Procedure

The liquid and gas sides can be flushed simultaneously; alternatively, one side can be flushed first and then Steps 1 to 8 repeated, for the other side. The flushing procedure is as follows:

1. Cover the inlets and outlets of the indoor units to prevent dirt getting blown in during pipe flushing. (Pipe flushing should be carried out before connecting the indoor units to the piping system.)
2. Attach a pressure reducing valve to a nitrogen cylinder.
3. Connect the pressure reducing valve outlet to the inlet on the liquid (or gas) side of the outdoor unit.
4. Use blind plugs to block all liquid (gas) side openings, except for the opening at the indoor unit which is furthest from the outdoor units ("Indoor unit A" in Figure 3-5.11).
5. Start to open the nitrogen cylinder valve and gradually increase the pressure to 0.5MPa.
6. Allow time for nitrogen to flow as far as the opening at indoor unit A.

Figure 3-5.12: Pipe flushing sequence[1]

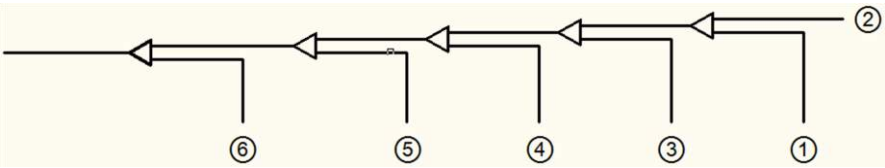

Notes:

1. 1-2-3-4-5-6 working towards the MS box

Box continued on next page ...

... box continued from previous page

7. Flush the first opening:
   a) Using suitable material, such as a bag or cloth, press firmly against the opening at indoor unit A.
   b) When the pressure becomes too high to block with your hand, suddenly remove your hand allowing gas to rush out.
   c) Repeatedly flush in this manner until no further dirt or moisture is emitted from the piping. Use a clean cloth to check for dirt or moisture being emitted. Seal the opening once it has been flushed.
8. Flush the other openings in the same manner, working in sequence from indoor unit A towards the outdoor units. Refer to Figure 3-5.12.
9. Once flushing is complete, seal all openings to prevent dust and moisture from entering.

5.9 Gastightness Test

5.9.1 Purpose

To prevent faults caused by refrigerant leakage, a gastightness test should be performed before system commissioning.

5.9.2 Procedure

Notes for installers

Warning

Only dry nitrogen should be used for gastightness testing. Oxygen, air, flammable gases and toxic gases must not be used for gastightness testing. Use of such gases may result in fire or explosion.

Procedure

The gastightness test procedure is as follows:

Step 1

- Once the piping system is complete and the indoor and outdoor units have been connected, vacuum the piping to -0.1MPa.

Step 2

- Charge the indoor piping with nitrogen at 0.3MPa through the needle valves on the liquid and gas stop valves and leave for at least 3 minutes (do not open the liquid or gas stop valves). Observe the pressure gauge to check for large leakages. If there is a large leakage, the pressure gauge will drop quickly.
- If there are no large leakages, charge the piping with nitrogen at 1.5MPa and leave for at least 3 minutes. Observe the pressure gauge to check for small leakages. If there is a small leakage, the pressure gauge will drop distinctly.
- If there are no small leakages, charge the piping with nitrogen at 4.2MPa and leave for at least 24 hours to check for micro leakages. Micro leakages are difficult to detect. To check for micro leakages, allow for any change in ambient temperature over the test period by adjusting the reference pressure by 0.01MPa per 1°C of temperature difference. Adjusted reference pressure = Pressure at pressurization + (temperature at observation – temperature at pressurization) x 0.01MPa. Compare the observed pressure with the adjusted reference pressure. If they are the same, the piping has passed the gastightness test. If the observed pressure is lower than the adjusted reference pressure, the piping has a micro leakage.
- If the leakage is detected, refer to Part 3, 5.9.3 “Leak detection”. Once the leak has been found and fixed, the gastightness test should be repeated.

Step 3

- If not continuing straight to vacuum drying (see Part 3, 5.10 “Vacuum Drying”) once the gastightness test is complete, reduce the system pressure to 0.5-0.8MPa and leave the system pressurized until ready to carry out the vacuum drying procedure.

Figure 3-5.13: Gastightness test

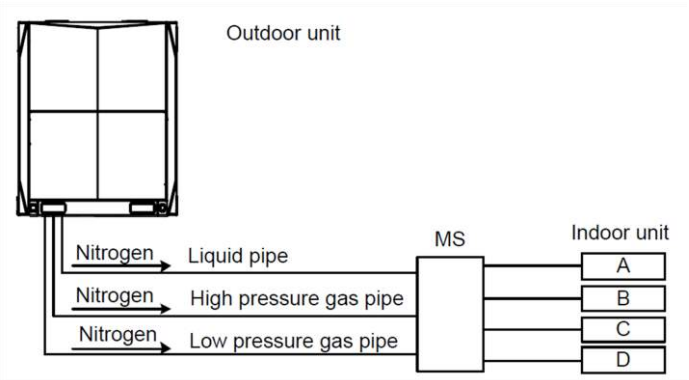

5.9.3 Leak detection

Notes for installers

The general methods for identifying the source of a leak are as follows:

1. Audio detection: relatively large leaks are audible.
2. Touch detection: place your hand at joints to feel for escaping gas.
3. Soapy water detection: small leaks can be detected by the formation of bubbles when soapy water is applied to a joint.
4. Refrigerant leak detection: for leaks that are difficult to detect, refrigerant leak detection may be used as follows:
   a) Pressurize the piping with nitrogen at 0.3MPa.
   b) Add refrigerant into the piping until the pressure reaches 0.5MPa.
   c) Use a halogen refrigerant detector to find the leak.
   d) If the leak source cannot be found, continuing charging with refrigerant to a pressure of 4MPa and then search again.

5.10 Vacuum Drying

5.10.1 Purpose

Vacuum drying should be performed in order to remove moisture and non-condensable gases from the system. Removing moisture prevents ice formation and oxidization of copper piping or other internal components. The presence of ice particles in the system would cause abnormal operation, whilst particles of oxidized copper can cause compressor damage. The presence of non-condensable gases in the system would lead to pressure fluctuations and poor heat exchange performance.

Vacuum drying also provides additional leak detection (in addition to the gastightness test).

5.10.2 Procedure

Notes for installers

During vacuum drying, a vacuum pump is used to lower the pressure in the piping to the extent that any moisture present evaporates. At 5mmHg (755mmHg below typical atmospheric pressure) the boiling point of water is 0°C. Therefore a vacuum pump capable of maintaining a pressure of -756mmHg or lower should be used. Using a vacuum pump with a discharge in excess of 4L/s and a precision level of 0.02mmHg is recommended.

Caution

- Before performing vacuum drying, make sure that all the outdoor unit stop valves are firmly closed.
- Once the vacuum drying is complete and the vacuum pump is stopped, the low pressure in the piping could suck vacuum pump lubricant into the air conditioning system. The same could happen if the vacuum pump stops unexpectedly during the vacuum drying procedure. Mixing of pump lubricant with compressor oil could cause compressor malfunction and a one-way valve should therefore be used to prevent vacuum pump lubricant seeping into the piping system.

Procedure

The vacuum drying procedure is as follows:

Step 1

- Connect the vacuum pump through a manifold with a pressure gauge to the master unit's all stop valves.

Step 2

- Start the vacuum pump and then open the manifold valves to start vacuuming the system.
- After 30 minutes, close the manifold valves.
- After a further 5 to 10 minutes check the pressure gauge. If the gauge has returned to zero, check for leakages in the refrigerant piping.

Step 3

- Re-open the manifold valves and continue vacuum drying for at least 2 hours and until a pressure difference of 756mmHg or more has been achieved. Once the pressure difference of at least 756mmHg has been achieved, continue vacuum drying for 2 hours.

Step 4

- Close the manifold valves and then stop the vacuum pump.
- After 1 hour, check the pressure gauge. If the pressure in the piping has not increased, the procedure is finished. If the pressure has increased, check for leakages.
- After vacuum drying, keep the manifold connected to the master unit stop valves, in preparation for refrigerant charging. (see Part 3, 8 "Charging Refrigerant").

Figure 3-5.14: Vacuum drying

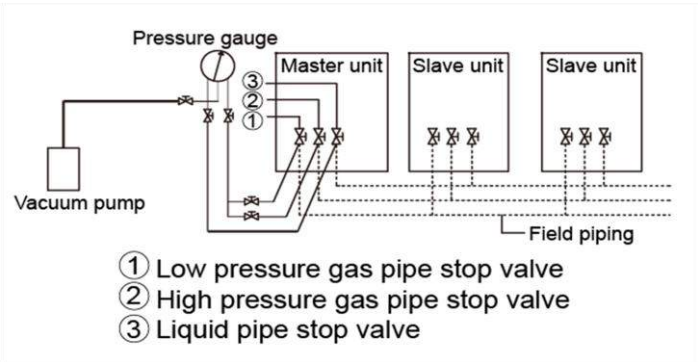

6 Drain Piping

6.1 Design Considerations

Drain piping design should take account of the following considerations:

- Indoor unit condensate drain piping needs to be of sufficient diameter to carry the volume of condensate produced at the indoor units and installed at a slope sufficient to allow drainage. Discharge as close as possible to the indoor units is usually preferable.
- To prevent the drain piping becoming excessively long, consideration should be given to installing multiple drain piping systems, with each system having its own drainage point and providing drainage for a subset of the overall set of indoor units.
- The routing of drain piping should take into consideration the need to maintain sufficient slope for drainage whilst avoiding obstacles such as beams and ducting. The drain piping slope should be at least 1:100 away from indoor units. Refer to Figure 3-6.1.

Figure 3-6.1: Drain piping minimum slope requirement

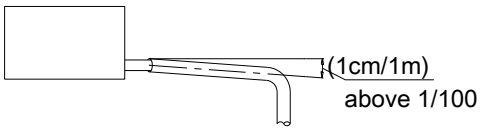

- To avoid backflow and other potential complications, two horizontal drain pipes should not meet at the same level. Refer to the Figure 3-6.2 for suitable connection arrangements. Such arrangements also allow the slope of the two horizontal pipes to be selected independently.

Figure 3-6.2: Drain piping joints – correct and incorrect configurations

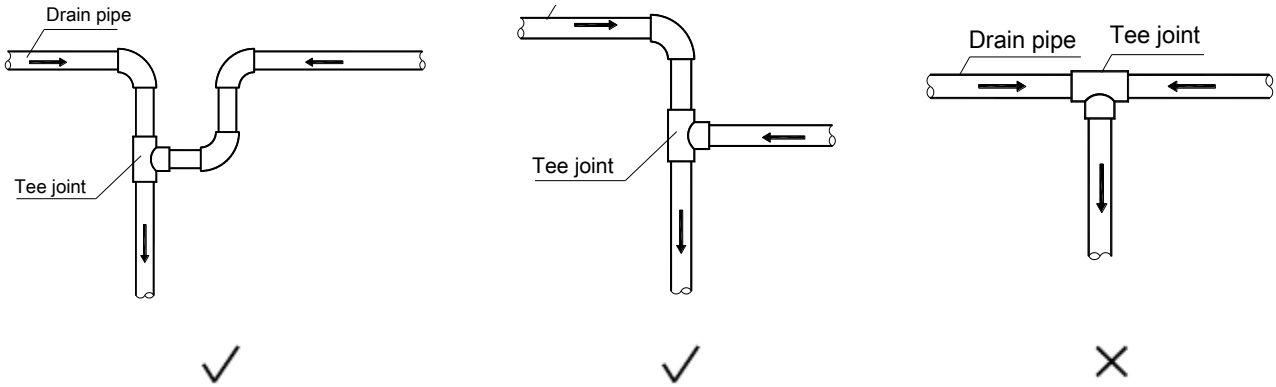

- Branch drain piping should join main drain piping from the top, as shown in Figure 3-6.3.
- Recommended support/hanger spacing is 0.8 – 1.0m for horizontal piping and 1.5 – 2.0m for vertical piping. Each vertical section should be fitted with at least two supports. For horizontal piping, spacing greater than those recommended leads to sagging and deformation of the pipe profile at the supports which impedes water flow and should therefore be avoided.
- Air vents should be fitted at the highest point of each drain piping system to ensure that condensation is discharged smoothly. U-bends or elbow joints should be used such that the vents face downwards, to prevent dust entering the piping. Refer to Figure 3-6.5. Air vents should not be installed too close to indoor unit lift pumps.

Figure 3-6.3: Branch drain piping joining main drain piping

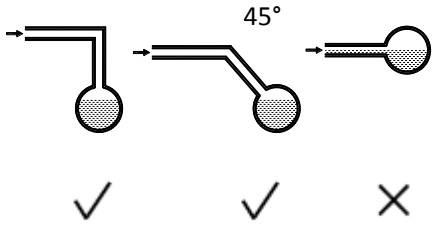

Figure 3-6.4: Effect of insufficient drain piping support

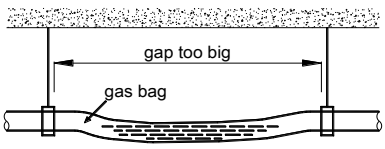

Figure 3-6.5: Drain piping air vents

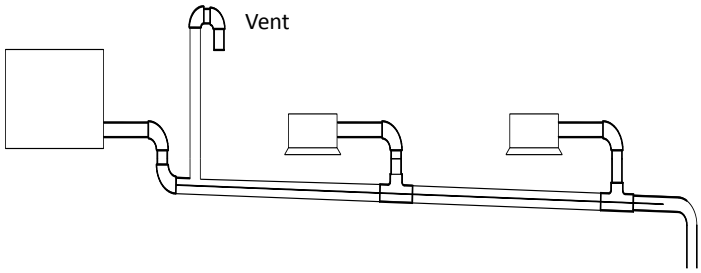

- Air conditioner drain piping should be installed separately from waste, rainwater and other drain piping and should not come into direct contact with the ground.
- Drain piping diameter should be not less than the indoor units' drain piping connection.
- To allow inspection and maintenance, the piping clamps shipped with units should be used to attach drain piping to indoor units – adhesive should not be used.
- Thermal insulation should be added to drain piping to prevent condensation forming. Thermal insulation should extend all the way to the connection with the indoor unit.
- Units with drain pumps should have separate drain piping systems from systems that use natural drainage.

6.2 Water Traps

For indoor units with a high negative pressure differential at the outlet of the drainage pan, a trap should be fitted to the drain piping to prevent poor drainage and/or water being blown back into the drainage pan. Traps should be arranged as in Figure 3-6.6. The vertical separation H should be in excess of 50mm. A plug may be fitted to allow cleaning or inspection.

Figure 3-6.6: Drain piping water traps

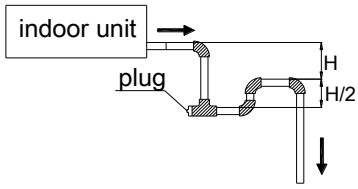

6.3 Selecting Piping Diameters

Select branch drainage piping (the drain piping connection to each unit) diameters according to indoor unit flow volume and select main drainage piping diameters according to the combined flow volume of the upstream indoor units. Use a design assumption of 2 liters of condensate per horsepower per hour. For example, the combined flow volume of three 2HP units and two 1.5HP units would be calculated as follows:

Combined flow volume = 3 x 2 L/HP/h × 2HP = 18 L/h
+ 2 x 2 L/HP/h × 1.5HP

Tables 3-6.1 and 3-6.2 specify the required piping diameters for horizontal and vertical branch piping and for main piping. Note that main piping should use PVC40 or larger.

Table 3-6.1: Horizontal drain piping diameters

PVC piping	Nominal diameter (mm)	Capacity (L/h)		Remarks
		Slope 1:50	Slope 1:100	
PVC25	25	39	27	Branch piping only
PVC32	32	70	50	
PVC40	40	125	88	Branch or main piping
PVC50	50	247	175	
PVC63	63	473	334	

Table 3-6.2: Vertical drain piping diameters

PVC piping	Nominal diameter (mm)	Capacity (L/h)	Remarks
PVC25	25	220	Branch piping only
PVC32	32	410	
PVC40	40	730	Branch or main piping
PVC50	50	1440	
PVC63	63	2760	
PVC75	75	5710	
PVC90	90	8280	

6.4 Drain Piping for Units with Lift Pumps

Drain piping for units with lift pumps should take account of the following additional considerations:

- A downward sloping section should immediately follow the vertically rising section adjacent to the unit, otherwise a water pump error will occur. Refer to Figure 3-6.7.
- Air vents should not be installed on vertically rising sections of drain piping, otherwise water may be discharged through the air vent or water flow may be impeded.

Figure 3-6.7: Downward sloping section of drain piping

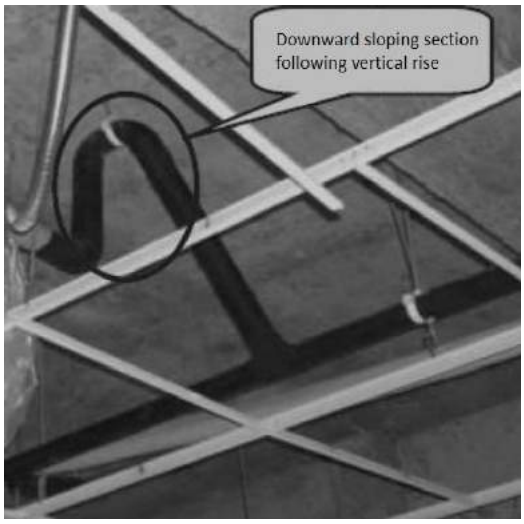

6.5 Drain Piping Installation

Notes for installers

Installation of the drain piping should proceed in the following order:

Indoor unit installation → Drain piping installation → Watertightness test → Drain piping insulation

Caution

- Ensure that all joints are firm and once the drain piping is all connected conduct a watertightness test and water flow test.
- Do not connect air conditioner drain piping to waste, rainwater or other drain piping and do not let air conditioner drain piping come into direct contact with the ground.
- For units with drain pumps, test that the drain pump functions properly by adding water to the unit's drainage pan and running the unit. To allow inspection and maintenance, the pipe clamps shipped with units should be used to attach drain piping to indoor units – adhesive should not be used.

6.6 Watertightness Test and Water Flow Test

Once installation of a drainage piping system is completed, watertightness and water flow tests should be performed.

Notes for installers

Watertightness test

- Fill the piping with water and test for leakages over a 24-hour period.

Water flow test (natural drainage test)

- Slowly fill the drainage pan of each indoor unit with at least 600ml of water through the inspection port and check that the water is discharged through the outlet of the drain piping.

Caution

- The drain plug in the drainage pan is for removing accumulated water prior to performing indoor unit maintenance. During normal operation, the drain should be plugged to prevent leakage.

7 Insulation

7.1 Refrigerant Piping Insulation

7.1.1 Purpose

During operation, the temperature of the refrigerant piping varies. Insulation is required to ensure unit performance and compressor lifespan. During cooling, the gas pipe temperature can be very low. Insulation prevents condensation forming on the piping. During heating, the gas pipe temperature can rise to as high as 100°C. Insulation serves as necessary protection from burns.

7.1.2 Selecting insulation materials

Refrigerant piping insulation should be closed-cell foam of B1 fire resistance rating that can withstand a constant temperature of over 120°C and that complies with all applicable legislation.

7.1.3 Thickness of insulation

Minimum thicknesses for refrigerant piping insulation are specified in Table 3-7.1. In hot, humid environments, the thickness of insulation should be increased over and above the specifications in Table 3-7.1.

Table 3-7.1: Refrigerant piping insulation thickness

Pipe outer diameter (mm)	Minimum insulation thickness (mm) Humidity < 80%RH	Minimum insulation thickness (mm) Humidity ≥ 80%RH
Φ6.35	15	20
Φ9.53		
Φ12.7		
Φ15.9		
Φ19.1		
Φ22.2		
Φ25.4		
Φ28.6		
Φ31.8		
Φ38.1		
Φ41.3	20	25
Φ44.5		
Φ54.0		

7.1.4 Installation of piping insulation

With the exception of joint insulation, insulation should be applied to piping before fixing the piping in place. Insulation at joints in refrigerant piping should be applied after the gastightness test has been completed.

Notes for installers

- Installation of insulation should be carried out in a manner suited to the type of insulation material being used.
- Ensure there are no gaps at the joints between sections of insulation.
- Do not apply tape too tightly as doing so may shrink insulation, reducing its insulating properties leading to condensation and loss of efficiency.
- Insulate gas and liquid pipes separately, otherwise heat exchange between the two sides will greatly impact efficiency.
- Do not bind the separately insulated gas and liquid pipes together too tightly as doing so can damage the joints between sections of insulation.

7.1.5 Installation of joint insulation

Insulation at joints in the refrigerant piping should be installed after the gastightness test has been successfully completed. The procedure at each joint is as follows:

1. Cut a section of insulation 50 to 100mm longer than the gap to be filled. Ensure that the cross-sectional and longitudinal openings are all cut evenly.
2. Embed the section into the gap ensuring that the ends abut tightly to the sections of insulation either side of the gap.
3. Glue the longitudinal cut and the joints with the sections of insulation either side of the gap.
4. Seal the seams with tape.

Figure 3-7.1: Installation of joint insulation (unit: mm)

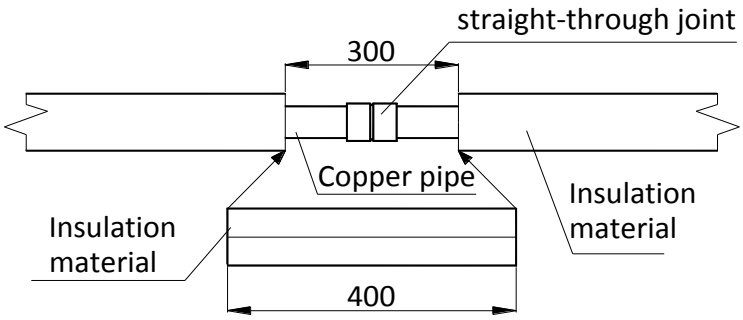

7.2 Drain Piping Insulation

- Use rubber/plastic insulating tube with a B1 fire resistance rating.
- The insulation should typically be in excess of 10mm thick.
- For drain piping installed inside a wall, insulation is not required.
- Use suitable adhesive to seal seams and joints in the insulation and then bind with cloth reinforced tape of width not less than 50mm. Ensure tape is fixed firmly to avoid condensation.
- Ensure the drain piping insulation adjacent to the indoor unit drainage water outlet is fixed to the unit itself using adhesive, to prevent condensation and dripping.

7.3 Ducting Insulation

- Suitable insulation should be added to ducting in according with all applicable legislation.

8 Charging Refrigerant

8.1 Calculating Additional Refrigerant Charge

Based on the field installed refrigerant pipe and system layout, additional refrigerant charge may be required. Please add additional refrigerant according to the calculation below. Record the size of each liquid pipe from outdoor unit to indoor units. Record the amount of refrigerant that was charged on the outdoor unit for future reference.

The additional refrigerant charge depends on outdoor unit model, MS model and the lengths and diameters of the outdoor and indoor liquid pipes. Table 3-8.1 shows the additional refrigerant charge R1 required each V6R outdoor unit for models.

Table 3-8.1: Additional refrigerant charge R1 -V6R outdoor unit

Outdoor unit model	Additional refrigerant charge per model (kg)
8HP	2
10HP	2
12HP	2.6
14HP	4.9
16HP	5.5
18HP	5.7

Table 3-8.2shows the additional refrigerant charge requirement each MS box for different MS box models. The additional charge requirement for the MS box is obtained by summing all the MS box, through the following formula, which M_1 to M_6 represent the number of MS box of each different model.

Additional refrigerant charge R_2 (kg) = $M_1 \times 0.1$
+ $M_2 \times 0.5$
+ $M_3 \times 0.5$
+ $M_4 \times 1.0$
+ $M_5 \times 1.0$
+ $M_6 \times 1.0$

Table 3-8.2: Additional refrigerant charge – MS box

Model	Additional refrigerant charge per box (kg)
MS01/N1-D	0.1
MS04/N1-D	0.5
MS06/N1-D	
MS08/N1-D	1.0
MS10/N1-D	
MS12/N1-D	

Table 3-8.1 shows the additional refrigerant charge required per meter of equivalent pipe length for different diameters of pipe. The total additional refrigerant charge is obtained by summing all the outdoor and indoor liquid pipes, through the following formula, where L_1 to L_8 represent the equivalent lengths of the pipes of different diameters. Assume 0.5m for the equivalent pipe length of each branch joint.

Additional refrigerant charge R3 (kg) = L_1 (**Φ6.35**) × 0.022
+ L_2 (**Φ9.53**) × 0.057
+ L_3 (**Φ12.7**) × 0.110
+ L_4 (**Φ15.9**) × 0.170
+ L_5 (**Φ19.1**) × 0.260
+ L_6 (**Φ22.2**) × 0.360
+ L_7 (**Φ25.4**) × 0.520
+ L_8 (**Φ28.6**) × 0.680

Table 3-8.3: Additional refrigerant charge-liquid pipes

Liquid side piping (mm)	Additional refrigerant charge per meter of equivalent length of piping (kg)
Φ6.35	0.022
Φ9.53	0.057
Φ12.7	0.110
Φ15.9	0.170
Φ19.1	0.260
Φ22.2	0.360
Φ25.4	0.520
Φ28.6	0.680

Calculate the total additional refrigerant charge amount to be charged according to the formula R (kg) = R1 + R2 +R3.

8.2 Adding Refrigerant

Notes for installers

Caution

- Charge refrigerant after performing a gastightness test and vacuum drying only.
- Never charge more refrigerant than required as doing so can lead to liquid hammering.
- Only use refrigerant R410A - charging with an unsuitable substance may cause explosions or accidents.
- Use tools and equipment designed for use with R410A to ensure required pressure resistance and to prevent impurity from entering the system.
- Refrigerant must be treated in accordance with applicable legislation.
- Always use protective gloves and protect your eyes when charging refrigerant.
- Open refrigerant containers slowly.

Procedure

The procedure for adding refrigerant is as follows:

Step 1

- Calculate additional refrigerant charge R (kg) (see Part 3, 8.1 “Calculating Additional Refrigerant Charge”)

Step 2

- Place a tank of R410A refrigerant on a weighing scale. Turn the tank upside down to ensure refrigerant is charged in a liquid state. (R410A is a blend of two different chemicals compounds. Charging gaseous R410A into the system could mean that the refrigerant charged is not of the correct composition).
- After vacuum drying (see Part 3, 5.10 “Vacuum Drying”), the blue and red pressure gauge hoses should still be connected to the pressure gauge and to the master unit stop valves.
- Connect the yellow hose from the pressure gauge to the R410A refrigerant tank.

Step 3

- Open the valve where the yellow hose meets the pressure gauge, and open the refrigerant tank slightly to let the refrigerant eliminate the air. Caution: open the tank slowly to avoid freezing your hand.
- Set the weighing scale to zero.

Step 4

- Open the three valves on the pressure gauge to begin charging refrigerant.
- When the amount charged reaches R (kg), close the three valves. If the amount charged has not reached R (kg) but no additional refrigerant can be charged, close the three valves on the pressure gauge, run the outdoor units in cooling mode, and then open the yellow and blue hose valves. Continue charging until the full R (kg) of refrigerant has been charged, then close the yellow and blue hose valves. Note: Before running the system, be sure to complete all the pre-commissioning checks as listed in Part 3, 11.4 “Pre-commissioning Checks” and be sure to open all stop valves as running the system with the stop valves closed would damage the compressor.

Figure 3-8.1: Charging refrigerant

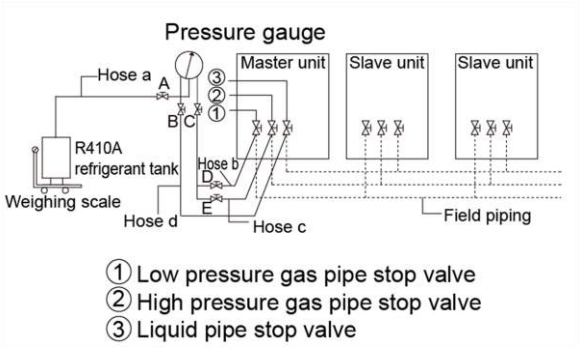

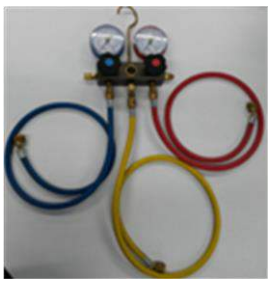

Pressure gauge

9 Electrical Wiring

9.1 General

Notes for installers

Caution

- All installation and wiring must be carried out by competent and suitably qualified, certified and accredited professionals and in accordance with all applicable legislation.
- Electrical systems should be grounded in accordance with all applicable legislation.
- Overcurrent circuit breakers and residual-current circuit breakers (ground fault circuit interrupters) should be used in accordance with all applicable legislation.
- Wiring patterns shown in this data book are general connection guides only and are not intended for, or to include all details for, any specific installation.
- The refrigerant piping, power wiring and communication wiring are typically run in parallel. However, the communication wiring should not be bound together with the refrigerant piping or power wiring. To prevent signal interference, the power wiring and communication wiring should not be run in the same conduit. If the power supply is less than 10A, a separation of at least 300mm between power wiring and communication wiring conduits should be maintained; if the power supply is in the range 10A to 50A then a separation of at least 500mm should be maintained.

9.2 Power Supply Wiring

Power supply wiring design and installation should adhere to the following requirements:

- Indoor units or MS boxes in the same system must be powered by the same power supply, in order not to damage the system.
- Power supply for the indoor units or MS boxes should separate from outdoor units.
- Make sure an electric leakage protection device is installed to prevent electric shocks or fires.
- All the indoor units and MS box in a system (i.e. all the indoor units and MS box connected to the same set of outdoor units) should be tied into the same power circuit with the same power supply, overcurrent and residual current protection (leakage protection) and manual switch. Do not install separate protectors or manual switches for each indoor unit and MS box. Powering on and shutting down all indoor units in a system should be done simultaneously. The reason for this is that if an indoor unit that is running were to suddenly power off whilst the other indoor units continued running, the evaporator of the powered-off unit would freeze since refrigerant would continue flowing to that unit (its expansion valve would still be open) but its fan would have stopped. The indoor units that remain running would not get sufficient refrigerant so their performance would suffer. Additionally, liquid refrigerant returning directly to the compressor from the powered-off unit would cause liquid hammering, potentially damaging the compressor.
- To select the size of the power wiring and circuit breaker for the outdoor units, please refer to the Table 2-7.1 in Part 2, 7 “Electrical Characteristics”.
- The power, electrical leakage protectors and operation switches for each indoor unit that are connected to the same outdoor unit and the MS box should be used by both.
- The MS box power wiring should be connected to the terminals with the label “L,N, ⏚”.
- For MS box power wire sizing and circuit breaker sizing, refer to Table 2-7.2 in Part 2, 7 “Electrical Characteristics”.
- If HT hydro module connects to the system, please refer to the installation manual of the HT hydro module.

Wiring layout comprises of the power wiring and communication wiring between the indoor, MS box and outdoor units. These include the earth wiring, and the shielded layer of the earth wiring of the indoor units in the P, Q, E communication wring. The V6R system wiring overview refer to Figure 2-9.1.

Figure 3-9.1: Overview of

V6R system wiring

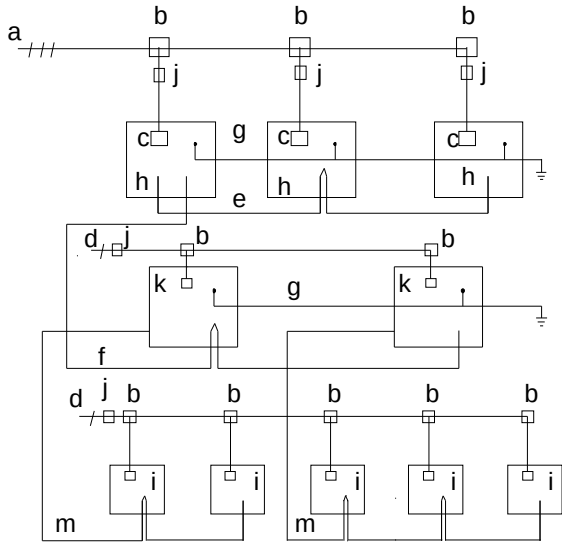

Legend	
a	Three-phase power supply (with earth wiring and leakage protection)
b	Power distribution box
c	Power supply terminal of outdoor unit
d	Single phase power supply (with earth wiring and leakage protection)
e	H1, H2 and E communication wire (with shielded layer) between outdoor unit and outdoor unit
f	P,Q and E communication wire(with shielded layer) between outdoor unit and MS box
g	Earth wiring
h	Outdoor unit
i	VRF indoor unit
j	Main switch (with leakage protection)
k	MS box
m	P, Q and E communication wire (with shielded layer) between MS box and Indoor unit

Notes for installers

The 3-phase, 380-415V, 50Hz of power supply should be connected to the outdoor unit power supply terminals as shown in Figure 3-9.2.

Figure 3-9.2: Outdoor unit 3-phase power supply terminals

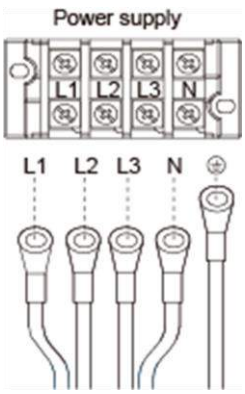

9.3 Communication Wiring

Communication wiring design and installation should adhere to the following requirements:

- Three-core shielded cable should be used for communication wiring. The cross-sectional area of each core of the communication wiring is not less than 0.75 mm2, and the length must not exceed 1200 m. Using other types of cable can lead to interference and malfunction.
- **Indoor communication wiring:**
  - The P Q E communication wires should be connected one unit after another in a daisy chain from the outdoor unit to the final indoor unit as shown in Figure 3-9.4 and Figure 3-9.5. At the final indoor unit (or HT hydro module), a 120Ω resistor should be connected between the P and Q terminals. After the final indoor unit (or HT hydro module), the communication wiring should NOT be continued back to the outdoor unit – that is, do not attempt to form a closed loop.
  - The shielding nets of the communication wires should be connected together and grounded. Grounding can be achieved by connecting to the metal casing adjacent to the P Q E terminals of the outdoor unit electrical control box.
- **Outdoor communication wiring:**
  - The H1 H2 E communication wires should be connected one unit after another in a daisy chain from the master outdoor unit to the last slave outdoor unit.

Notes for installers

The communication wires should be connected to the master outdoor unit terminals indicated in Figure 3-9.3 and Table 3-9.1.

Caution

- Communication wiring has polarity. Care should be taken to connect the poles correctly.

Figure 3-9.3: Master outdoor unit communication terminals

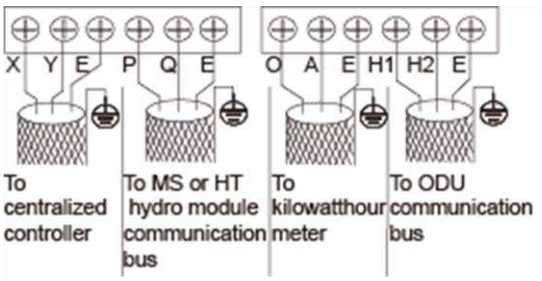

Table 3-9.1: Communication connections

Terminals	Connection
X Y E	Connect to centralized controller
P Q E	Connect between MS or high temperature hydro module and master outdoor unit
O A E	Connect to digital energy meter
H1 H2 E	Connect between outdoor units

- **MS communication wiring:**
  - MS box communication wires should be connected to the position with the label "P, Q, E ⏚ " and correspond to the "P, Q, E ⏚" wiring position for the outdoor and indoor units.

Figure 3-9.4: Communication wiring of single outdoor unit

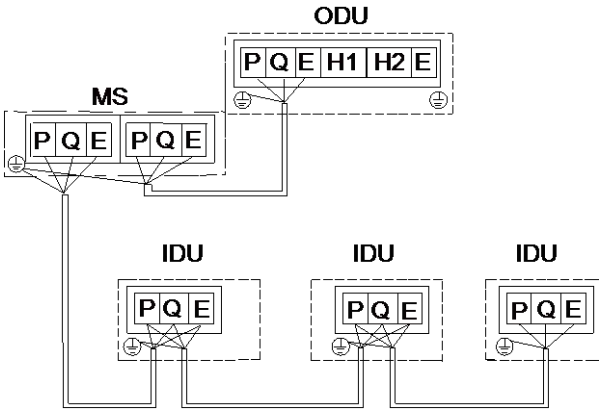

Figure 3-9.5: Communication wiring of multi outdoor unit

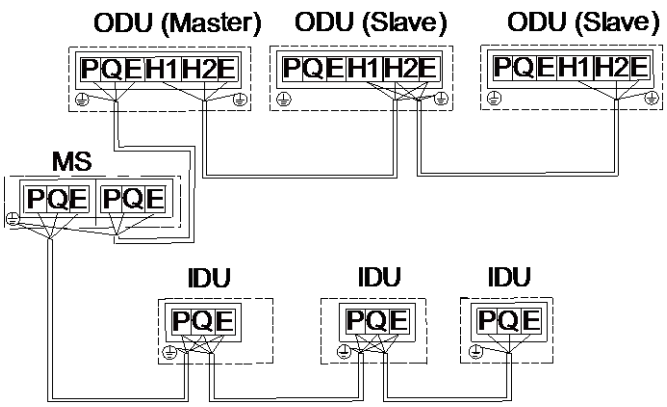

- **Example of communication wiring:**

Figure 3-9.6: Communication wiring example

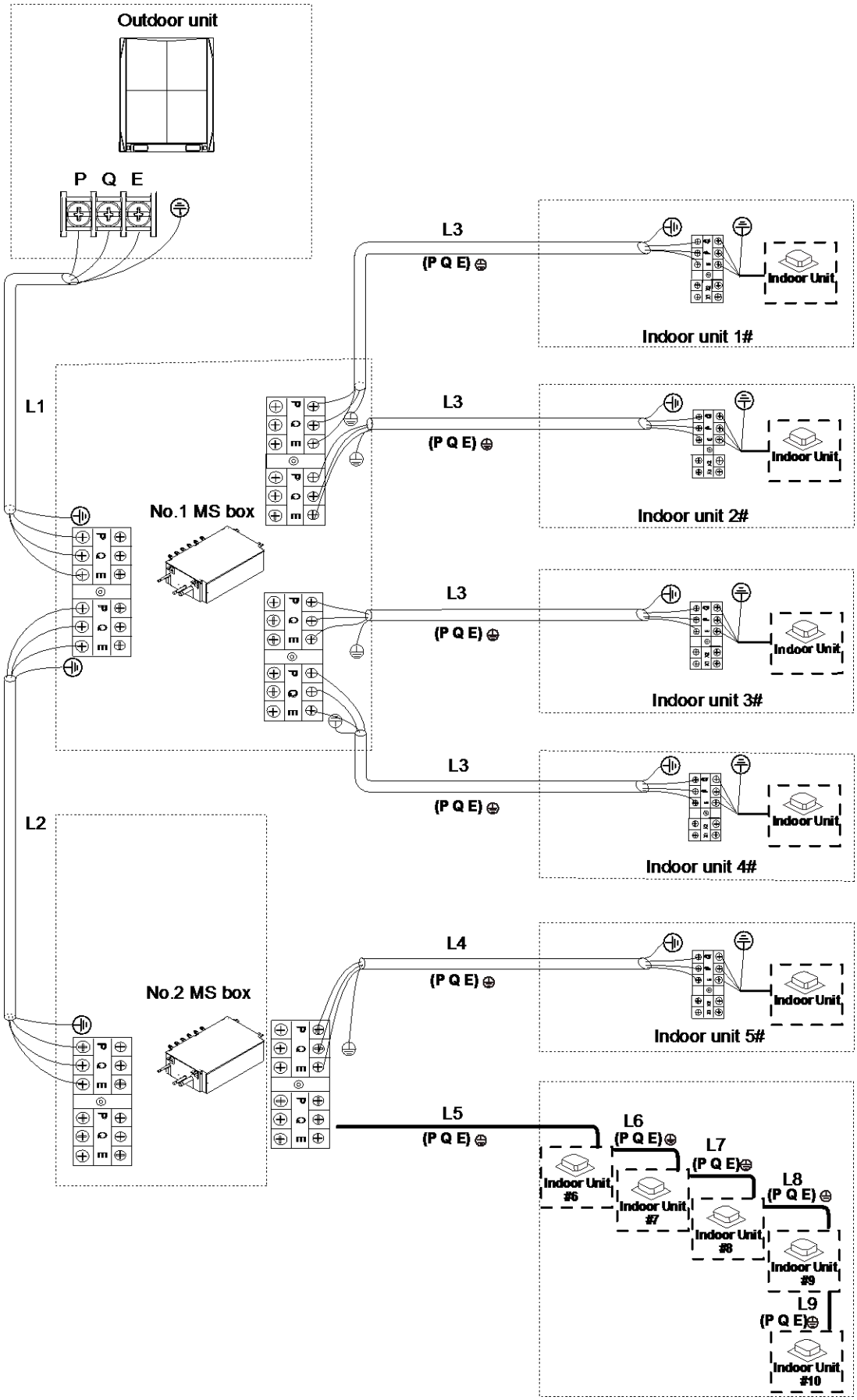

Notes:

1. One port of the MS04-12 box allows for connection of up to five IDUs in series.
2. One port of the MS01 box allows for connection of up to eight IDUs in series.
3. L1+L2≤1200 m; L3≤1200 m; L4≤1200 m; L5+L6+L7+L8+L9≤1200 m

- **Refrigerant leakage sensor connection and settings for MS01**
  - Shut off power before connect the refrigerant leakage sensor to the corresponding port on the MS main board.
  - Max. 5 refrigerant leakage sensors can be connected to one MS01, and the connection port number of refrigerant sensor is CN3 ~ CN7 on the main board.
  - Setting the correct numbers of the connected sensors with the ENC1 in the main control board.
  - S1-1 switch should be set to "ON" position.

Figure 3-9.7: Refrigerant leakage sensor connection

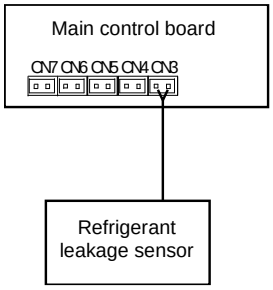

9.4 Wiring Example

Figure 3-9.8: Wiring of piping lines and communication wires

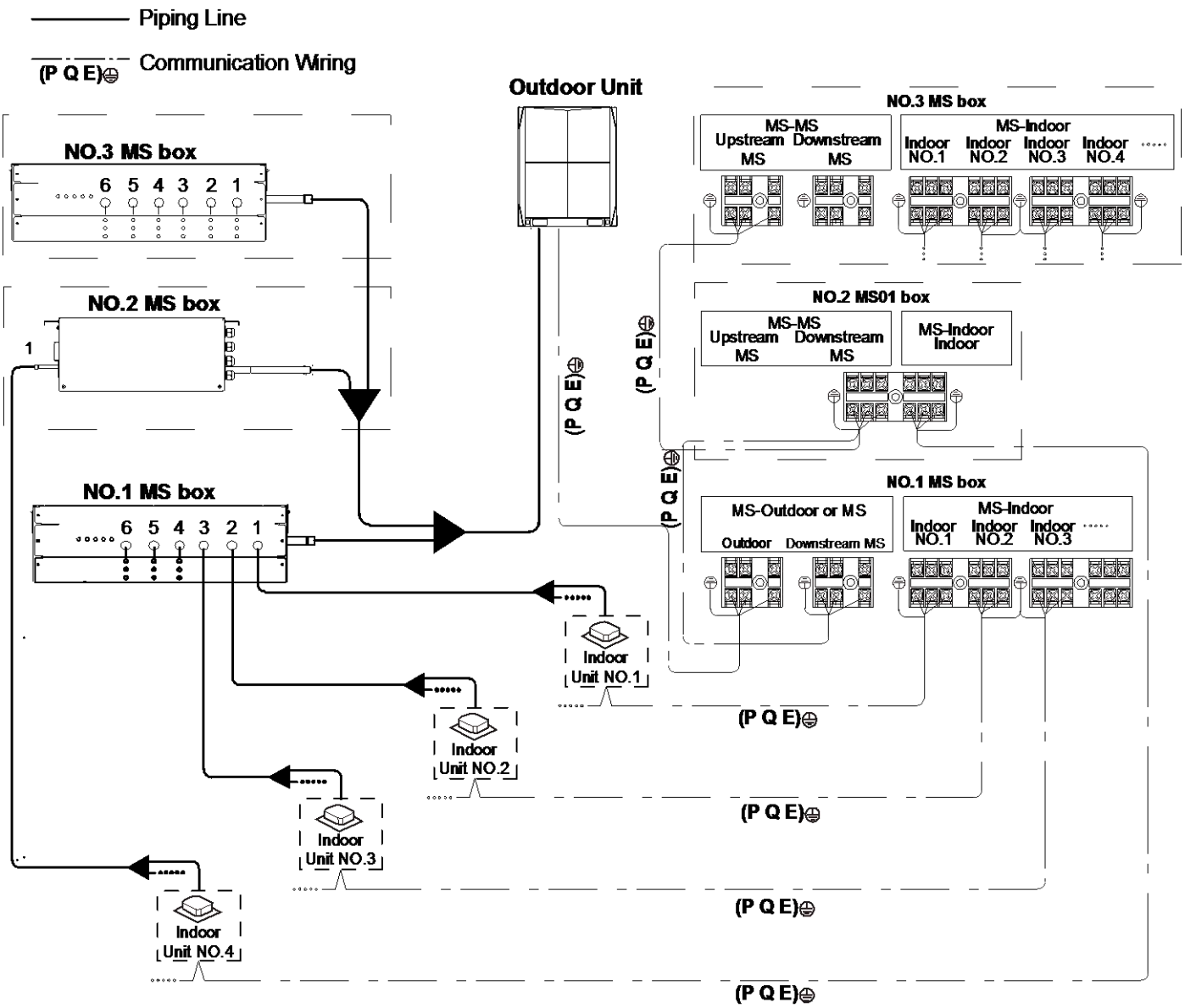

10 Installation in Areas of High Salinity

10.1 Caution

Do not install outdoor units where they could be directly exposed to sea air. Corrosion, particularly on the condenser and evaporator fins, could cause product malfunction or inefficient performance.

Outdoor units installed in seaside locations should be placed such as to avoid direct exposure to the sea air and additional anticorrosion treatment options should be selected, otherwise the service life of the outdoor units will be seriously affected.

Air conditioning installed in seaside locations should be run regularly as the running of the outdoor unit fans helps prevent build-up of salt on the outdoor unit heat exchangers.

10.2 Placement and Installation

Outdoor units should be installed 300m or more from the sea. If possible, well-ventilated indoor locations should be chosen. (When installing outdoor units indoors, outdoor unit discharge ducts should be added. See Part 3, 3 “Outdoor Unit Ducting and Shielding”.) Refer to Figure 3-10.1. If it is necessary to install outdoor units outside, direct exposure to the sea air should be avoided. A canopy should be added to shield the units from sea air and rain, as shown in Figure 3-10.2.

Ensure that base structures drain well so that outdoor unit footings do not become waterlogged. Check that outdoor unit casing drainage holes are not blocked.

Figure 3-10.1: Installation in a well-ventilated indoor area

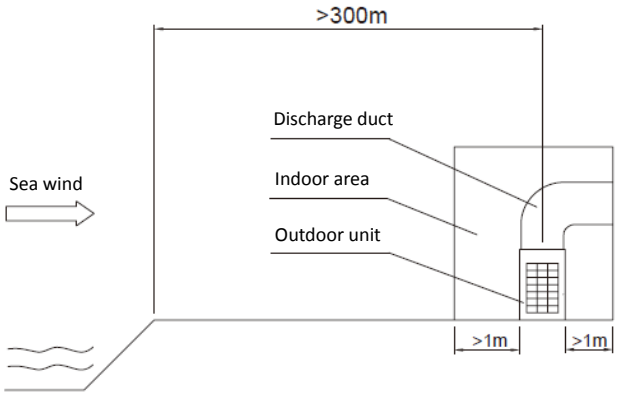

Figure 3-10.2: Installation outdoors under a canopy

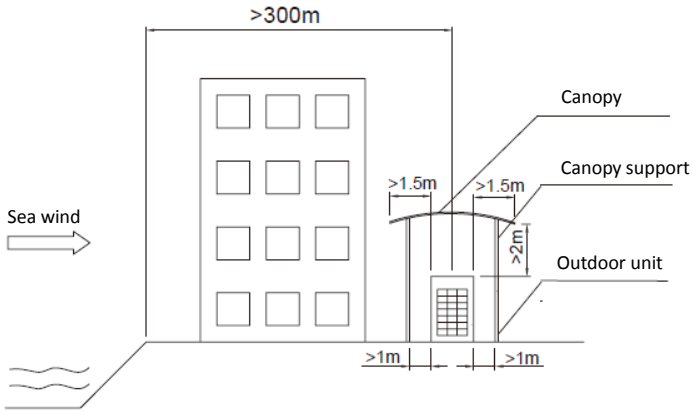

10.3 Inspection and maintenance

In addition to standard outdoor unit servicing and maintenance, the following additional inspections and maintenance should be undertaken for outdoor units installed in seaside locations:

- A comprehensive post-installation inspection should check for any scratches or other damage to painted surfaces and any damaged areas should be repainted/repaired immediately.
- The units should be regularly cleaned using (non-salty) water to remove any salt that has accumulated. Areas cleaned should include the condenser, the refrigerant piping system, the outside surface of the unit casing and the outside surface of the electric control box.
- Regular inspections should check for corrosion and if necessary corroded components should be replaced and/or anti-corrosion treatments should be added.

11 Commissioning

11.1 Outdoor Unit Address and Capacity Settings

Make sure all the settings you need to configure are completed. Refer to part 4 “Field settings” in “V6R VRF Service Manual”. Before running a system for the first time, set each outdoor unit’s address on switch ENC1 on each outdoor unit’s data transfer module. Data Transfer Module is an additional auxiliary small PCB installed on the side columns of the outdoor unit. Refer to Table 3-11.1. The capacity of each outdoor unit (on switch ENC2 on each outdoor unit’s main PCB) is factory-set and should not need changing. Check that the capacity settings are correct. Refer to Table 3-11.1.

Table 3-11.1: Outdoor unit address and capacity settings

Address settings	
0	Master unit
1	Slave unit 1
2	Slave unit 2
≥3	Invalid

Capacity settings	
0	8HP
1	10HP
2	12HP
3	14HP
4	16HP
5	18HP

11.2 MS Box Address and PCB Number Settings

Refer to part 4 “Field settings” in “V6R VRF Service Manual”. Before running a system for the first time, set each MS box’s address. The MS unit can be automatic addressed, also the address can be set manually. Manually MS address setting is the MS box first PCB (ENC2 switches positions “0”). The PCB number of each MS box (on switch ENC2 on each MS box’s main PCB) is factory-set and should not need changing. Check that the capacity settings are correct. Refer to Table 3-11.2

Table 3-11.2: MS box PCB number settings

PCB number settings	
0	The first PCB of MS box
1	The second PCB of MS box
2	The third PCB of MS box

11.3 Multi-system Projects

For projects with multiple refrigerant systems, each independent refrigeration system (i.e. each system of up to three outdoor units and their connected indoor units) should be given a test run independently, before the multiple systems that make up a project are run simultaneously.

11.4 Pre-commissioning Checks

Before turning on the power to the indoor and outdoor units, ensure the following:

1. All indoor and outdoor refrigeration piping and communication wiring has been connected to the correct refrigeration system and the system to which each indoor and outdoor unit belongs is clearly marked on each unit or recorded in some other suitable place.
2. Pipe flushing, gastightness testing and vacuum drying have been satisfactorily completed as per instructions.
3. All condensate drain piping is complete and a watertightness test has been satisfactorily completed.
4. All power and communication wiring is connected to the correct terminals on units and controllers. (Check that the different phases of the 3-phase power supplies have been connected to the correct terminals).
5. No wiring has been connected in a short-circuit.
6. The power supplies to indoor and outdoor units have been checked and the power supply voltages are within ±10% of the rated voltages for each product.
7. All control wiring is 0.75mm^2 three-core shielded cable and the shielding has been grounded.
8. The outdoor units’ address and capacity switches are set correctly (see Part 3, 11.1 “Outdoor Unit Address and Capacity Settings”) and all other indoor and outdoor unit field settings have been set as required.

9. The additional refrigerant charge has been added as per Part 3, 8 “Charging Refrigerant”. Note: In some circumstances it may be necessary to run the system in cooling mode during the refrigerant charging procedure. In such circumstances, points 1 to 8 above should be checked before running the system for the purpose of charging refrigerant and the outdoor unit liquid and gas valves should be opened.

During commissioning, it is important that you:

- Keep a supply of R410A refrigerant at hand.
- Keep the system layout, system piping and control wiring diagrams at hand.

11.5 Commissioning Trial Runs

11.5.1 Commissioning test run of single refrigerant system

Once all the pre-commissioning checks in Part 3, 11.4 “Pre-commissioning Checks” have been completed, a test run should be performed as described below and a V6R Series System Commissioning Report (see Part 3, 12 “Appendix to Part 3 – System Commissioning Report”) should be completed as a record of the operating status of the system during commissioning.

Note: When running the system for commissioning test runs, if the combination ratio is 100% or less, run all the indoor units and if the combination ratio is more than 100%, run indoor units with total capacity equal to the total capacity of the outdoor units.

The test run procedure is as follows:

1. Open the outdoor unit liquid, low pressure gas and high pressure gas stop valves.
2. Turn on the power to the indoor units, MS box and outdoor units.
3. If manual addressing is being used, set the addresses of each indoor unit and MS box, refer to part 4 “Field settings” in “V6R VRF Service Manual”.
4. Use the menu mode "n11" to enter the test run according to the method in part 4 “Field settings” in “V6R VRF Service Manual”.
5. Leave the power on for a minimum of 12 hours prior to running the system to ensure that the crankcase heaters have heated the compressor oil sufficiently.
6. Run the system:
   a) Run the system in cooling mode with the following settings: temperature 17°C; fan speed high.
   b) After one hour, complete Sheet A of the system commissioning report then:
      i. Check the system parameters using system check button on each outdoor unit’s data transfer module and complete the cooling mode columns of one Sheet E and one Sheet F of the system commissioning report for each outdoor unit.
      ii. Check the MS box parameters using the spot check buttons on each MS box’s PCB and complete the cooling mode columns of one Sheet G of the system commissioning report for each group of indoor units downstream of each MS box.
   c) Run the system in heating mode with the following settings: temperature 30°C; fan speed high.
   d) After one hour, complete Sheet B of the system commissioning report then:
      i. Check the system parameters using system check button on each outdoor unit’s data transfer module and complete the heating mode columns of one Sheet E and one Sheet F of the system commissioning report for each outdoor unit.
      ii. Check the MS box parameters using the spot check buttons on each MS box’s PCB and complete the heating mode columns of one Sheet G of the system commissioning report for each group of indoor units downstream of each MS box.
   e) Run the system in mixed mode with the following settings:
      i. Run 50% of the indoor units in cooling mode: temperature 17°C; fan speed high.

ii. Run 50% of the indoor units in heating mode: temperature 30°C; fan speed high.

f) After one hour, complete Sheet C of the system commissioning report then:

i. Check the system parameters using system check button on each outdoor unit's data transfer module and complete the mixed mode columns of one Sheet E and one Sheet F of the system commissioning report for each outdoor unit.

ii. Check the MS box parameters using the spot check buttons on each MS box's PCB and complete either the cooling mode or heating mode columns (as appropriate) of one Sheet G of the system commissioning report for each group of indoor units downstream of each MS box.

7. Finally, complete Sheet D of the system commissioning report.
8. The test run is considered complete when there is no error code on the user interface or the outdoor unit display. When an error code is displayed, rectify the operation based on the description in the error code table. Try to conduct the test run again to check that the exception has been corrected.

11.5.2 Commissioning test run of multiple refrigerant systems

Once the commissioning test run of each refrigerant system has been satisfactorily completed as per Part 3, 11.5.1 "Commissioning test run of single refrigerant system", run the multiple systems that make up a project simultaneously and check for any abnormalities.

12 Appendix to Part 3 – System Commissioning Report

A total of up to 7 report sheets should be completed for each system:

- One Sheet A, one Sheet B and one Sheet C per system.
- One Sheet D and one Sheet E per outdoor unit.
- One Sheet G per group of indoor units downstream of each MS box.

V6R Series System Commissioning Report – Sheet A

SYSTEM INFORMATION			
Project name and location		Customer company	
System name		Installation company	
Commissioning date		Agent company	
Outdoor ambient temp.		Commissioning engineer	
Power supply (V)	A-B	B-C	C-A

OUTDOOR UNIT INFORMATION				
	Master unit	Slave unit 1	Slave unit 2	Slave unit 3
Model				
Serial no.				

COOLING MODE PARAMETER RECORD
(After running in cooling mode for one hour)

OUTDOOR UNITS												
	Master unit			Slave unit 1			Slave unit 2			Slave unit 3		
Compressor suction pipe temperature												
System pressure at check port												
	A	B	C	A	B	C	A	B	C	A	B	C
Phase currents (A)												
Within normal range?												

INDOOR UNITS
(Sample of over 20% of the indoor units including the unit farthest from the outdoor units)

Room no.	Model	Address	Set temp. (°C)	Inlet temp. (°C)	Outlet temp. (°C)	Drainage OK?	Abnormal noise/ vibration?

V6R Series System Commissioning Report – Sheet B

Project name and location		System name	

HEATING MODE PARAMETER RECORD
(After running in heating mode for one hour)

OUTDOOR UNITS												
	Master unit			Slave unit 1			Slave unit 2			Slave unit 3		
Compressor suction pipe temperature												
System pressure at check port												
	A	B	C	A	B	C	A	B	C	A	B	C
Phase currents (A)												
Within normal range?												

INDOOR UNITS
(Sample of over 20% of the indoor units including the unit farthest from the outdoor units)

Room no.	Model	Address	Set temp. (°C)	Inlet temp. (°C)	Outlet temp. (°C)	Drainage OK?	Abnormal noise/ vibration?

V6R Series System Commissioning Report – Sheet C

Project name and location		System name	

RECORD OF ISSUES SEEN DURING COMMISSIONING				
No.	Description of observed issue	Suspected cause	Troubleshooting undertaken	Serial no. of relevant unit
1				
2				
3				

OUTDOOR UNIT FINAL CHECKLIST				
	Master unit	Slave unit 1	Slave unit 2	Slave unit 3
System check performed?				
Any abnormal noise?				
Any abnormal vibration?				
Fan rotation normal?				

	Commissioning engineer	Dealer	Mundoclima representative
Name:			
Signature:			
Date:			

V6R Series System Commissioning Report – Sheet D

Project name and location		System name	

DSP1 content	Parameters displayed on DSP2	Remarks	Observed values	
			Cooling mode	Heating mode
0.--	Unit address	Master unit: 0; slave units: 1, 2		
1.--	Single module capacity	8-18HP		
2.--	Number of outdoor units	Displayed on master unit PCB only		
3.--	Number of indoor units as set on PCB	Displayed on master unit PCB only		
4.--	Total capacity of outdoor unit	Only available for master unit, displayed on slave units has no sense		
5.--	Single module compressor frequency	Displayed on master unit PCB only		
6.--	System compressor frequency	Actual value = value displayed × 10		
7.--	System operating mode	0: off; 2: cooling; 3: heating; 4: main heating; 5: main cooling.		
8.--	Fan A speed index	Refer to Note 1		
9.--	Fan B speed index	Refer to Note 1		
10.--	Indoor heat exchanger pipe (T2) temperature (°C)	Actual value = value displayed		
11.--	Indoor heat exchanger pipe (T2B) temperature (°C)	Actual value = value displayed		
12.--	Main heat exchanger pipe (T3) temperature (°C)	Actual value = value displayed		
13.--	Outdoor ambient (T4) temperature (°C)	Actual value = value displayed		
14.--	Outdoor liquid pipe (T5) temperature (°C)	Actual value = value displayed		
15.--	Plate heat exchanger cooling refrigerant inlet (T6A) temperature (°C)	Actual value = value displayed		
16.--	Plate heat exchanger cooling refrigerant outlet (T6B) temperature (°C)	Actual value = value displayed		
17.--	Inverter compressor discharge (T7C1) temperature (°C)	Actual value = value displayed		
18.--	Outdoor heat exchanger gas pipe (T8) temperature (°C)	Actual value = value displayed		
19.--	Compressor inverter module internal (Ntc) temperature (°C)	Actual value = value displayed		
20.--	Inverter module heatsink (T9)temperature (°C)	Actual value = value displayed		
21.--	Outdoor heat exchanger liquid pipe (TL) temperature (°C)	Actual value = value displayed		
22.--	Compressor suction (T7) temperature (°C)	Actual value = value displayed		
23.--	Discharge superheat degree (°C)	Actual value = value displayed		
24.--	Primary current (A)	Actual value = value displayed		
25.--	EXVA position	Actual value = value displayed × 24		
26.--	EXVC position	Actual value = value displayed × 4		
27.--	Compressor discharge pressure (MPa)	Actual value = value displayed/10		
28.--	Compressor suction pressure (MPa)	Actual value = value displayed/100		
29.--	Number of indoor units currently in communication with master unit	Displayed on master unit PCB only		
30.--	Number of indoor units currently operating	Displayed on master unit PCB only		
31.--	Heat exchanger status	0-OFF; 1-Condenser; 2-Condenser (Not used); 3-Evaporator; 4-Evaporator (Not used)		
32.--	System startup status	2~4-Startup control; 6-PI control;		
33.--	Silent setting	Refer to Note 2		

Table continued on next page …

V6R Series System Commissioning Report – Sheet E

Project name and location		System name	

... table continued from previous page

DSP1 content	Parameters displayed on DSP2	Remarks	Observed values	
			Cooling mode	Heating mode
34.--	Static pressure mode	0: 0 Pa; 1: 20Pa; 2: 40Pa; 3: 60Pa; 4: 80Pa.		
35.--	TES(°C)	Actual value = value displayed		
36.--	TCS(°C)	Actual value = value displayed - 25		
37.--	DC voltage A	Actual value = value displayed × 10		
38.--	AC voltage B	Actual value = value displayed × 2		
39.--	Number of indoor units for cooling operation	Actual value = value displayed		
40.--	Number of indoor units for healing operation	Excluding HT hydro module		
41.--	Number of high temperature HT hydro modules running	Actual value = value displayed		
42.--	Total capacity of indoor units for cooling operation			
43.--	Total capacity of indoor units for heating operation	Excluding HT hydro module		
44.--	Total capacity of high temperature hydro modules running			
45.--	Fan's failure history			
46.--	Software version			
47.--	Power limitation mode settings			
48.--	Reserved			
49.--	Reserved			
50.--	Reserved			
51.--	Most recent error or protection code	"--" is displayed if no error or protection events have occurred since start-up		
-- --	--	End		

Notes:

1. The fan speed index is related to the fan speed in rpm and can take any integer value in the range 1 (slowest) to 30 (fastest).
2. Silent mode:

- 0: night silent time 6h/10h; 1: night silent time 6h/12h; 2: night silent time 8h/10h; 3: night silent time 8h/12h; 4: no silent mode; 8: Silent; 10: Ultra-silent

V6R Series System Commissioning Report – Sheet G

Project name and location		System name	

No.	Parameters displayed on DSP1	Remarks	Observed values	
			Cooling mode	Heating mode
1	Operation IDU quantity	Actual value		
2	System operation mode	0-OFF; 2-Cooling Only; 3-Heating Only; 5-Main Cooling Mode; 6-Main Heating Mode		
3	High pressure (MPa)	Actual value = value displayed × 0.1		
4	Low pressure (MPa)	Actual value = value displayed × 0.01		
5	Subcooler outlet temperature	Actual value = value displayed		
6	Subcooler inlet temperature	Actual value = value displayed		
7	EEV position	Actual value = value displayed × 10		
8	Software version			
9	MS Address	Actual value = value displayed		
10	EBVA position[1]	Actual value = value displayed × 10		
11	EBVB position[1]	Actual value = value displayed × 10		
12	EBVC position[1]	Actual value = value displayed × 10		
13	Port No. for refrigerant leakage alarm[1]	Actual value = value displayed If there are multiple alarms at the same time, only the minimum port number is displayed		
14	Number of ports for refrigerant leakage alarm[1]	Actual value = value displayed		
15	Min (T2, T2B) of cooling operation IDU under the MS[1]	Actual value = value displayed If there is no cooling operation of the indoor unit, the digital display "-"		

Notes:

1. Number 10 to 15 are only for MS01.

Ver. 2020-06

MUNDOCLIMA®

C/ NÁPOLES 249 P1
08013 BARCELONA
ESPAÑA / SPAIN
(+34) 93 446 27 80
SAT: (+34) 93 652 53 57

www.mundoclima.com