MUNDOCLIMA®

ERROR CODES EN

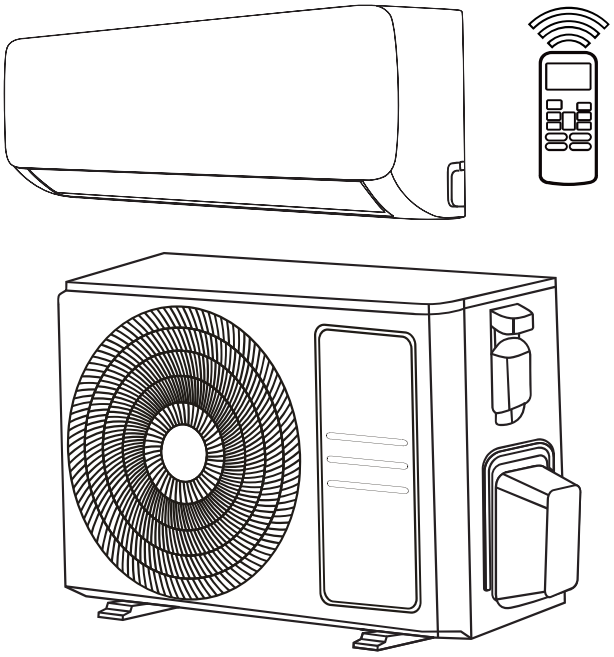

www.mundoclima.com

2025

08/11/2024

Click on the reference number to go to the info page

Set		Component		Reference
Code	Model	Code	Model	
CL20055	MUPR-09-H11	UE20055	MUPR-09-H11-E	1
		UI20055	MUPR-09-H11-I	
CL20056	MUPR-12-H11	UE20056	MUPR-12-H11-E	
		UI20056	MUPR-12-H11-I	
CL20057	MUPR-18-H11	UE20057	MUPR-18-H11-E	
		UI20057	MUPR-18-H11-I	
CL20058	MUPR-24-H11	UE20058	MUPR-24-H11-E	
		UI20058	MUPR-24-H11-I	
CL20060	MUPR-09-H14X	UE20060	MUPR-09-H14X-E	
		UI20060	MUPR-09-H14X-I	
CL20061	MUPR-12-H14X	UE20061	MUPR-12-H14X-E	
		UI20061	MUPR-12-H14X-I	
CL20062	MUPR-18-H14X	UE20062	MUPR-18-H14X-E	
		UI20062	MUPR-18-H14X-I	
CL20063	MUPR-24-H14X	UE20063	MUPR-24-H14X-E	
		UI20063	MUPR-24-H14X-I	
CL20030	MUPR-09-H10X	UE20030	MUPR-09-H10X-E	
		UI20030	MUPR-09-H10X-I	
CL20031	MUPR-12-H10X	UE20031	MUPR-12-H10X-E	
		UI20031	MUPR-12-H10X-I	
CL20032	MUPR-18-H10X	UE20032	MUPR-18-H10X-E	
		UI20031	MUPR-18-H10X-I	
CL20033	MUPR-24-H10X	UE20033	MUPR-24-H10X-E	
		UI20033	MUPR-24-H10X-I	
CL20035	MUPR-09-H7	UE20035	MUPR-09-H7	2
		UI20035	MUPR-09-H7	
CL20036	MUPR-12-H7	UE20036	MUPR-12-H7	
		UI20036	MUPR-12-H7	
CL20037	MUPR-18-H7	UE20037	MUPR-18-H7	
		UI20037	MUPR-18-H7	
CL20038	MUPR-24-H7	UE20038	MUPR-24-H7	
		UI20038	MUPR-24-H7	
CL20015	MUPR-09-H6	UE20015	MUPR-09-H6	
		UI20015	MUPR-09-H6	
CL20016	MUPR-12-H6	UE20016	MUPR-12-H6	
		UI20016	MUPR-12-H6	
CL20017	MUPR-18-H6	UE20017	MUPR-18-H6	
		UI20017	MUPR-18-H6	
CL20018	MUPR-24-H6	UE20018	MUPR-24-H6	
		UI20018	MUPR-24-H6	
CL20805	MUPR-09-H4	UE20805	MUPR-09-H4	
		UI20805	MUPR-09-H4	
CL20806	MUPR-12-H4	UE20806	MUPR-12-H4	
		UI20806	MUPR-12-H4	
CL20807	MUPR-18-H4	UE20807	MUPR-18-H4	
		UI20807	MUPR-18-H4	
CL20808	MUPR-24-H4	UE20808	MUPR-24-H4	
		UI20808	MUPR-24-H4	

Click on the reference number to go to the info page

Set		Component		Reference
Code	Model	Code	Model	
CL20801	MUPR-09-H3	UE20801	MUPR-09-H3	2
		UI20801	MUPR-09-H3	
CL20802	MUPR-12-H3	UE20802	MUPR-12-H3	
		UI20802	MUPR-12-H3	
CL20803	MUPR-18-H3	UE20803	MUPR-18-H3	
		UI20803	MUPR-18-H3	
CL20804	MUPR-24-H3	UE20804	MUPR-24-H3	
		UI20804	MUPR-24-H3	
CL20041	MUPR-09-H9A	UE20041	MUPR-09-H9A	3
		UI20041	MUPR-09-H9A	
CL20042	MUPR-12-H9A	UE20042	MUPR-12-H9A	
		UI20042	MUPR-12-H9A	
CL20043	MUPR-18-H9A	UE20043	MUPR-18-H9A	
		UI20043	MUPR-18-H9A	
CL20044	MUPR-24-H9A	UE20044	MUPR-24-H9A	
		UI20044	MUPR-24-H9A	
CL20045	MUPR-09-H8A	UE20045	MUPR-09-H8A	
		UI20045	MUPR-09-H8A	
CL20046	MUPR-12-H8A	UE20046	MUPR-12-H8A	
		UI20046	MUPR-12-H8A	
CL20047	MUPR-18-H8A	UE20047	MUPR-18-H8A	
		UI20047	MUPR-18-H8A	
CL20048	MUPR-24-H8A	UE20048	MUPR-24-H8A	
		UI20048	MUPR-24-H8A	
CL20025	MUPR-09-H5A	UE20025	MUPR-09-H5A	
		UI20025	MUPR-09-H9A	
CL20026	MUPR-12-H5A	UE20026	MUPR-12-H5A3	
		UI20026	MUPR-12-H5A	
CL20027	MUPR-18-H5A	UE20027	MUPR-18-H5A	
		UI20027	MUPR-18-H5A	
CL20028	MUPR-24-H5A	UE20028	MUPR-24-H5A	
		UI20044	MUPR-24-H9A	
CL20029	MUPR-12-H5A2	UE20029	MUPR-12-H5A3	
		UI20029	MUPR-12-H5A2	
CL20736	MUPR-09-H5	UE20736	MUPR-09-H5	
		UI20736	MUPR-09-H5	
CL20737	MUPR-12-H5	UE20737	MUPR-12-H5	
		UI20737	MUPR-12-H5	
CL20738	MUPR-18-H5	UE20738	MUPR-18-H5	
		UI20738	MUPR-18-H5	
		CL21400	MUEX-14-H11.2	4
		CL21401	MUEX-18-H11.2	
		CL21405	MUEX-28-H11.4	
		CL21406	MUEX-36-H11.4	
		CL21407	MUEX-42-H11.5	
		CL21402	MUEX-18-H11.3	
		CL21403	MUEX-21-H11.3	
		CL21409	MUEX-24-H11.4	

Click on the reference number to go to the info page

Set		Component		Reference
Code	Model	Code	Model	
		CL21404	MUEX-27-H11.3	4
		UE45301	MUEW-18-H14.2	5
		UE45304	MUEW-27-H14.3	
		CL21413	MUCSR-09-H14-I	8
		CL21414	MUCSR-12-H14-I	
		CL21415	MUCSR-18-H14-I	
		CL21416	MUCSR-24-H14-I	
		CL20440	MUEX-14-H6.2	6
		CL20441	MUEX-18-H6.2	
		CL20442	MUEX-21-H6.3	
		CL20443	MUEX-27-H6.3	
		CL20444	MUEX-28-H6.4	
		CL20445	MUEX-36-H6.4	
		CL20446	MUEX-42-H6.5	
		CL20450	MUPR-09-H6M	
		CL20451	MUPR-12-H6M	
		CL20452	MUPR-18-H6M	
		CL20453	MUPR-24-H6M	
		CL20454	MUCSR-12-H6M(V2)	
		CL20455	MUCSR-18-H6M(V2)	
		CL20456	MUCR-12-H6M	
		CL20457	MUCR-18-H6M	
		CL20460	MUEX-14-H9.2	
		CL20461	MUEX-18-H9.2	
		CL20462	MUEX-21-H9.3	
		CL20463	MUEX-27-H9.3	
		CL20464	MUEX-28-H9.4	
		CL20465	MUEX-36-H9.4	
		CL20466	MUEX-42-H9.5	
		CL20450	MUPR-09-H6M	
		CL20451	MUPR-12-H6M	
		CL20452	MUPR-18-H6M	
		CL20453	MUPR-24-H6M	
		UI20260	MUCSR-12-H8	
		UI20455	MUCSR-18-H6M(V2)	
		CL20456	MUCR-12-H6M	
		CL20457	MUCR-18-H6M	
		CL20458	MUCR-12-H6M(V2)	
		CL20459	MUCR-18-H6M(V2)	
		CL20460	MUEX-14-H9.2	
		CL20461	MUEX-18-H9.2	
		CL20462	MUEX-21-H9.3	
		CL20463	MUEX-27-H9.3	
		CL20464	MUEX-28-H9.4	
		CL20465	MUEX-36-H9.4	
		CL20466	MUEX-42-H9.5	
		CL20467	MUEX-42-H9.5(V2)	
		CL20470	MUPR-09-H9M	

Click on the reference number to go to the info page

Set		Component		Reference
Code	Model	Code	Model	
		CL20471	MUPR-12-H9M	6
		CL20472	MUPR-18-H9M	
		CL20473	MUPR-24-H9M	
		UI20474	MUCSR-12-H9M	
		UI20475	MUCSR-18-H9M	
		CL20476	MUCR-12-H9M	
		CL20477	MUCR-18-H9M	
		CL20478	MUCNR-12-H9M	
		CL20479	MUCNR-16-H9M	
		CL20810	MUEX-18-H3.2	7
		CL20811	MUEX-24-H3.3	
		CL20812	MUEX-28-H3.4	
		CL20813	MUEX-42-H3.5	
		CL20814	MUEX-14-H3.2	
		CL20810	MUEX-18-H3.2	
		CL20815	MUPRM-09-H3G	
		CL20820	MUPR-7-H3M	
		CL20821	MUPR-9-H3M	
		CL20822	MUPR-12-H3M	
		CL20823	MUPR-18-H3M	
		UI20824	MUCSR-12-H3M	
		UI20825	MUCSR-18-H3M	
		UI20826	MUCSR-24-H3M	
		CL20827	MUCNR-9-H3M	
		CL20828	MUCNR-12-H3M	
		CL20829	MUCNR-18-H3M	
		CL20830	MUSTR-9-H3M	
		CL20831	MUSTR-12-H3M	
		CL20832	MUSTR-18-H3M	
		CL20834	MUCR-9-H3M	
		CL20835	MUCR-12-H3M	
		CL20836	MUCR-18-H3M	
		CL20837	MUCR-21-H3M	
		CL20838	MUCR-24-H3M	
CL21500	MUCSR-12-H11	UE21500	MUER-12-H11-E	8
		UI21500	MUCSR-12-H11-I	
CL21501	MUCSR-18-H11	UE21501	MUER-18-H11-E	
		UI21501	MUCSR-18-H11-I	
CL21502	MUCSR-24-H11	UE21502	MUER-24-H11-E	
		UI21502	MUCSR-24-H11-I	
CL21503	MUCSR-30-H11	UE21503	MUER-30-H11-E	
		UI21503	MUCSR-30-H11-I	
CL21504	MUCSR-36-H11	UE21504	MUER-36-H11-E	
		UI21504	MUCSR-36-H11-I	
CL21505	MUCSR-42-H11	UE21505	MUER-42-H11-E	
		UI21505	MUCSR-42-H11-I	
CL21506	MUCSR-48-H11	UE21506	MUER-48-H11-E	
		UI21507	MUCSR-48-H11-I	

Click on the reference number to go to the info page

Set		Component		Reference
Code	Model	Code	Model	
CL21507	MUCSR-48-H11T	UE21507	MUER-48-H11T-E	8
		UI21507	MUCSR-48-H11-I	
CL21508	MUCSR-60-H11T	UE21508	MUER-60-H11T-E	
		UI21508	MUCSR-60-H11-I	
CL21511	MUSTR-18-H11	UE21501	MUER-18-H11-E	
		UI21511	MUSTR-18-H11-I	
CL21512	MUSTR-24-H11	UE21502	MUER-24-H11-E	
		UI21512	MUSTR-24-H11-I	
CL21514	MUSTR-36-H11	UE21504	MUER-36-H11-E	
		UI21514	MUSTR-36-H11-I	
CL21517	MUSTR-48-H11T	UE21507	MUER-48-H11T-E	
		UI21517	MUSTR-48-H11-I	
CL21518	MUSTR-60-H11T	UE21508	MUER-60-H11T-E	
		UI21518	MUSTR-60-H11-I	
CL21520	MUCR-12-H11	UE21500	MUER-12-H11-E	
		UI21520	MUCR-12-H11-I	
CL21521	MUCR-18-H11	UE21501	MUER-18-H11-E	
		UI21521	MUCR-18-H11-I	
CL21522	MUCR-24-H11	UE21502	MUER-24-H11-E	
		UI21522	MUCR-24-H11-I	
CL21523	MUCR-30-H11	UE21503	MUER-30-H11-E	
		UI21523	MUCR-30-H11-I	
CL21524	MUCR-36-H11	UE21504	MUER-36-H11-E	
		UI21524	MUCR-36-H11-I	
CL21525	MUCR-42-H11	UE21505	MUER-42-H11-E	
		UI21525	MUCR-42-H11-I	
CL21526	MUCR-48-H11	UE21506	MUER-48-H11-E	
		UI21527	MUCR-48-H11-I	
CL21527	MUCR-48-H11T	UE21507	MUER-48-H11T-E	
		UI21527	MUCR-48-H11-I	
CL21528	MUCR-60-H11T	UE21508	MUER-60-H11T-E	
		UI21528	MUCR-60-H11-I	
CL21530	MUCNR-12-H11	UE21500	MUER-12-H11-E	
		UI21530	MUCNR-12-H11-I	
CL21531	MUCNR-18-H11	UE21501	MUER-18-H11-E	
		UI21531	MUCNR-18-H11-I	
CL21552	MUSTR-18-H14	UE21542	MUER-18-H14-E	
		UI21552	MUSTR-18-H14-I	
CL21553	MUSTR-24-H14	UE21543	MUER-24-H14-E	
		UI21553	MUSTR-24-H14-I	
CL21554	MUSTR-30-H14	UE21544	MUER-30-H14-E	
		UI21554	MUSTR-30-H14-I	
CL21555	MUSTR-36-H14	UE21545	MUER-36-H14-E	
		UI21555	MUSTR-36-H14-I	
CL21556	MUSTR-42-H14	UE21546	MUER-42-H14-E	
		UI21556	MUSTR-42-H14-I	
CL21557	MUSTR-48-H14	UE21547	MUER-48-H14-E	
		UI21558	MUSTR-48-H14-I	

Click on the reference number to go to the info page

Set		Component		Reference
Code	Model	Code	Model	
CL21558	MUSTR-48-H14T	UE21548	MUER-48-H14T-E	8
		UI21558	MUSTR-48-H14-I	
CL21559	MUSTR-60-H14T	UE21549	MUER-60-H14T-E	
		UI21559	MUSTR-60-H14-I	
CL21570	MUCNR-09-H14	UE21540	MUER-09-H14-E	
		UI21570	MUCNR-09-H14-I	
CL21571	MUCNR-12-H14	UE21541	MUER-12-H14-E	
		UI21571	MUCNR-12-H14-I	
CL21572	MUCNR-18-H14	UE21542	MUER-18-H14-E	
		UI21572	MUCNR-18-H14-I	
CL21536	MUCOR-48-H11	UE21506	MUER-48-H11-E	
		UI21537	MUCOR-48-H11-I	
CL21560	MUCR-09-H14	UE21540	MUER-09-H14-E	
		UI21560	MUCR-09-H14-I	
CL21561	MUCR-12-H14	UE21541	MUER-12-H14-E	
		UI21561	MUCR-12-H14-I	
CL21562	MUCR-18-H14	UE21542	MUER-18-H14-E	
		UI21562	MUCR-18-H14-I	
CL21563	MUCR-24-H14	UE21543	MUER-24-H14-E	
		UI21563	MUCR-24-H14-I	
CL21564	MUCR-30-H14	UE21544	MUER-30-H14-E	
		UI21564	MUCR-30-H14-I	
CL21565	MUCR-36-H14	UE21545	MUER-36-H14-E	
		UI21565	MUCR-36-H14-I	
CL21566	MUCR-42-H14	UE21546	MUER-42-H14-E	
		UI21566	MUCR-42-H14-I	
CL21567	MUCR-48-H14	UE21547	MUER-48-H14-E	
		UI21568	MUCR-48-H14-I	
CL21568	MUCR-48-H14T	UE21548	MUER-48-H14T-E	
		UI21568	MUCR-48-H14-I	
CL21569	MUCR-60-H14T	UE21549	MUER-60-H14T-E	
		UI21569	MUCR-60-H14-I	
CL21570	MUCNR-09-H14	UI21570	MUCNR-09-H14-I	
		UE21540	MUER-09-H14-E	
CL21571	MUCNR-12-H14	UI21571	MUCNR-12-H14-I	
		UE21541	MUER-12-H14-E	
CL21572	MUCNR-18-H14	UI21572	MUCNR-18-H14-I	
		UE21542	MUER-18-H14-E	
CL21537	MUCOR-48-H11T	UE21507	MUER-48-H11T-E	
		UI21537	MUCOR-48-H11-I	
CL21540	MUCSR-09-H14	UE21540	MUER-09-H14-E	
		UI21540	MUCSR-09-H14-I	
CL21541	MUCSR-12-H14	UE21541	MUER-12-H14-E	
		UI21541	MUCSR-12-H14-I	
CL21542	MUCSR-18-H14	UE21542	MUER-18-H14-E	
		UI21542	MUCSR-18-H14-I	
CL21543	MUCSR-24-H14	UE21543	MUER-24-H14-E	
		UI21543	MUCSR-24-H14-I	

Click on the reference number to go to the info page

Set		Component		Reference
Code	Model	Code	Model	
CL21544	MUCSR-30-H14	UE21544	MUER-30-H14-E	8
		UI21544	MUCSR-30-H14-I	
CL21545	MUCSR-36-H14	UE21545	MUER-36-H14-E	
		UI21545	MUCSR-36-H14-I	
CL21546	MUCSR-42-H14	UE21546	MUER-42-H14-E	
		UI21546	MUCSR-42-H14-I	
CL21547	MUCSR-48-H14	UE21547	MUER-48-H14-E	
		UI21548	MUCSR-48-H14-I	
CL21548	MUCSR-48-H14T	UE21548	MUER-48-H14T-E	
		UI21548	MUCSR-48-H14-I	
CL21549	MUCSR-60-H14T	UE21549	MUER-60-H14T-E	
		UI21549	MUCSR-60-H14-I	
CL20230	MUCSR-12-H6	UE20230	MUCSR-12-H6	9
		UI20230	MUCSR-12-H6	
CL20231	MUCSR-18-H6	UE20231	MUCSR-18-H6	
		UI20231	MUCSR-18-H6	
CL20232	MUCSR-24-H6	UE20232	MUCSR-24-H6	
		UI20232	MUCSR-24-H6	
CL20233	MUCSR-30-H6	UE20233	MUCSR-30-H6	
		UI20533	MUCSR-30-H6	
CL20234	MUCSR-36-H6	UE20234	MUCSR-36-H6	
		UI20234	MUCSR-36-H6	
CL20235	MUCSR-42-H6	UE20235	MUCSR-42-H6	
		UI20235	MUCSR-42-H6	
CL20236	MUCSR-48-H6	UE20236	MUCSR-48-H6	
		UI20236	MUCSR-48-H6	
CL20237	MUCSR-48-H6T	UE20237	MUCSR-48-H6T	
		UI20237	MUCSR-48-H6T	
CL20238	MUCSR-60-H6T	UE20238	MUCSR-60-H6T	
		UI20238	MUCSR-60-H6T	
CL20241	MUCSR-18-H6	UE20241	MUSTR-18-H6	
		UI20241	MUSTR-18-H6	
CL20242	MUSTR-24-H6	UE20242	MUSTR-24-H6	
		UI20242	MUSTR-24-H6	
CL20243	MUSTR-30-H6	UE20243	MUSTR-30-H6	
		UI20243	MUSTR-30-H6	
CL20244	MUSTR-36-H6	UE20244	MUSTR-36-H6	
		UI20244	MUSTR-36-H6	
CL20245	MUSTR-42-H6	UE20245	MUSTR-42-H6	
		UI20245	MUSTR-42-H6	
CL20246	MUSTR-48-H6	UE20246	MUSTR-48-H6	
		UI20246	MUSTR-48-H6	
CL20247	MUSTR-48-H6T	UE20247	MUSTR-48-H6T	
		UI20247	MUSTR-48-H6T	
CL20248	MUSTR-60-H6T	UE20248	MUSTR-60-H6T	
		UI20248	MUSTR-60-H6T	
CL20250	MUCR-12-H6	UE20250	MUCR-12-H6	
		UI20250	MUCR-12-H6	

Click on the reference number to go to the info page

Set		Component		Reference
Code	Model	Code	Model	
CL20251	MUCR-18-H6	UE20251	MUCR-18-H6	9
		UI20251	MUCR-18-H6	
CL20252	MUCR-24-H6	UE20252	MUCR-24-H6	
		UI20252	MUCR-24-H6	
CL20253	MUCR-30-H6	UE20253	MUCR-30-H6	
		UI20253	MUCR-30-H6	
CL20254	MUCR-36-H6	UE20254	MUCR-36-H6	
		UI20254	MUCR-36-H6	
CL20255	MUCR-42-H6	UE20255	MUCR-42-H6	
		UI20255	MUCR-42-H6	
CL20256	MUCR-48-H6	UE20256	MUCR-48-H6	
		UI20256	MUCR-48-H6	
CL20257	MUCR-48-H6T	UE20257	MUCR-48-H6T	
		UI20257	MUCR-48-H6T	
CL20258	MUCR-60-H6T	UE20258	MUCR-60-H6T	
		UI20258	MUCR-60-H6T	
CL20260	MUCSR-12-H8	UE20260	MUCSR-12-H8	
		UI20260	MUCSR-12-H8	
CL20261	MUCSR-18-H8	UE20261	MUCSR-18-H8	
		UI20261	MUCSR-18-H8	
CL20262	MUCSR-24-H8	UE20262	MUCSR-24-H8	
		UI20262	MUCSR-24-H8	
CL20263	MUCSR-30-H8	UE20263	MUCSR-30-H8	
		UI20263	MUCSR-30-H8	
CL20264	MUCSR-36-H8	UE20264	MUCSR-36-H8	
		UI20264	MUCSR-36-H8	
CL20265	MUCSR-42-H8	UE20265	MUCSR-42-H8	
		UI20265	MUCSR-42-H8	
CL20266	MUCSR-48-H8	UE20266	MUCSR-48-H8	
		UI20266	MUCSR-48-H8	
CL20267	MUCSR-48-H8T	UE20267	MUCSR-48-H8T	
		UI20267	MUCSR-48-H8T	
CL20268	MUCSR-60-H8T	UE20268	MUCSR-60-H8T	
		UI20268	MUCSR-60-H8T	
CL20271	MUSTR-18-H8	UE20271	MUSTR-18-H8	
		UI20271	MUSTR-18-H8	
CL20272	MUSTR-24-H8	UE20272	MUSTR-24-H8	
		UI20272	MUSTR-24-H8	
CL20273	MUSTR-30-H8	UE20273	MUSTR-30-H8	
		UI20273	MUSTR-30-H8	
CL20274	MUSTR-36-H6	UE20274	MUSTR-36-H8	
		UI20274	MUSTR-36-H8	
CL20275	MUSTR-42-H8	UE20275	MUSTR-42-H8	
		UI20275	MUSTR-42-H8	
CL20276	MUSTR-48-H8	UE20276	MUSTR-48-H8	
		UI20276	MUSTR-48-H8	
CL20277	MUSTR-48-H8T	UE20277	MUSTR-48-H8T	
		UI20277	MUSTR-48-H8T	

Click on the reference number to go to the info page

Set		Component		Reference
Code	Model	Code	Model	
CL20278	MUSTR-60-H8T	UE20278	MUSTR-60-H8T	9
		UI20278	MUSTR-60-H8T	
CL20280	MUCR-12-H8	UE20280	MUCR-12-H8	
		UI20280	MUCR-12-H8	
CL20281	MUCR-18-H8	UE20281	MUCR-18-H8	
		UI20281	MUCR-18-H8	
CL20282	MUCR-24-H8	UE20282	MUCR-24-H8	
		UI20282	MUCR-24-H8	
CL20283	MUCR-30-H8	UE20283	MUCR-30-H8	
		UI20283	MUCR-30-H8	
CL20284	MUCR-36-H8	UE20284	MUCR-36-H8	
		UI20284	MUCR-36-H8	
CL20285	MUCR-42-H8	UE20285	MUCR-42-H8	
		UI20285	MUCR-42-H8	
CL20286	MUCR-48-H8	UE20286	MUCR-48-H8	
		UI20286	MUCR-48-H8	
CL20287	MUCR-48-H8T	UE20287	MUCR-48-H8T	
		UI20287	MUCR-48-H8T	
CL20288	MUCR-60-H8T	UE20288	MUCR-60-H8T	
		UI20288	MUCR-60-H8T	
CL20393	MUCOR-48-H9T	UE20393	MUCOR-48-H9T	
		UI20393	MUCOR-48-H9T	
CL20395	MUCOR-60-H8T	UE20395	MUCOR-60-H8T	
		UI20395	MUCOR-60-H8T	
CL20500	MUCSR-12-H9	UE20500	MUCSR-12-H9	
		UI20500	MUCSR-12-H9	
CL20501	MUCSR-18-H9	UE20501	MUCSR-18-H9	
		UI20501	MUCSR-18-H9	
CL20502	MUCSR-24-H9	UE20502	MUCSR-24-H9	
		UI20502	MUCSR-24-H9	
CL20503	MUCSR-30-H9	UE20503	MUCSR-30-H9	
		UI20503	MUCSR-30-H9	
CL20504	MUCSR-36-H9	UE20504	MUCSR-36-H9	
		UI20504	MUCSR-36-H9	
CL20505	MUCSR-42-H9	UE20505	MUCSR-42-H9	
		UI20505	MUCSR-42-H9	
CL20507	MUCSR-48-H9T	UE20507	MUCSR-48-H9T	
		UI20507	MUCSR-48-H9T	
CL20508	MUCSR-60-H9T	UE20508	MUCSR-60-H9T	
		UI20508	MUCSR-60-H9T	
CL20511	MUSTR-18-H9	UE20511	MUSTR-18-H9	
		UI20511	MUSTR-18-H9	
CL20512	MUSTR-24-H9	UE20512	MUSTR-24-H9	
		UI20512	MUSTR-24-H9	
CL20513	MUSTR-30-H9	UE20513	MUSTR-30-H9	
		UI20513	MUSTR-30-H9	
CL20514	MUSTR-36-H9	UE20514	MUSTR-36-H9	
		UI20514	MUSTR-36-H9	

Click on the reference number to go to the info page

Set		Component		Reference
Code	Model	Code	Model	
CL20515	MUSTR-42-H9	UE20515	MUSTR-42-H9	9
		UI20515	MUSTR-42-H9	
CL20517	MUSTR-48-H9T	UE20517	MUSTR-48-H9T	
		UI20517	MUSTR-48-H9T	
CL20518	MUSTR-60-H9T	UE20518	MUSTR-60-H9T	
		UI20518	MUSTR-60-H9T	
CL20520	MUCR-12-H9	UE20520	MUCR-12-H9	
		UI20520	MUCR-12-H9	
CL20521	MUCR-18-H9	UE20521	MUCR-18-H9	
		UI20521	MUCR-18-H9	
CL20522	MUCR-24-H9	UE20522	MUCR-24-H9	
		UI20522	MUCR-24-H9	
CL20523	MUCR-30-H9	UE20523	MUCR-30-H9	
		UI20523	MUCR-30-H9	
CL20524	MUCR-36-H9	UE20524	MUCR-36-H9	
		UI20524	MUCR-36-H9	
CL20525	MUCR-42-H9	UE20525	MUCR-42-H9	
		UI20525	MUCR-42-H9	
CL20527	MUCR-48-H9T	UE20527	MUCR-48-H9T	
		UI20527	MUCR-48-H9T	
CL20528	MUCR-60-H9T	UE20528	MUCR-60-H9T	
		UI20528	MUCR-60-H9T	
CL20536	MUCNR-12-H9M	UE20500	MUCSR-12-H9	
		CL20478	MUCNR-12-H9M	
CL20537	MUCNR-16-H9M	UE20501	MUCSR-18-H9	
		CL20479	MUCNR-16-H9M	
CL20781	MUCR-18-H5	UE20781	MUCR-18-H5	
		UI20781	MUCR-18-H5	
CL20782	MUCR-24-H5	UE20782	MUCR-24-H5	
		UI20782	MUCR-24-H5	
CL20541	MUCSR-18-H10A	UE20541	MUCSR-18-H10A	10
		UI20541	MUCSR-18-H10A	
CL20542	MUCSR-24-H10A	UE20542	MUCSR-24-H10A	
		UI20542	MUCSR-24-H10A	
CL20581	MUSTR-18-H10A	UE20581	MUSTR-18-H10A	
		UI20581	MUSTR-18-H10A	
CL20582	MUSTR-24-H10A	UE20582	MUSTR-24-H10A	
		UI20582	MUSTR-24-H10A	
CL20592	MUCR-24-H10A	UE20592	MUCR-24-H10A	
		UI20592	MUCR-24-H10A	
CL20594	MUCR-36-H10A	UE20594	MUCR-36-H10A	
		UI20594	MUCR-36-H10A	
CL20842	MUCSR-12-H3	UE20842	MUCSR-12-H3	11
		UI20842	MUCSR-12-H3	
CL20843	MUCSR-18-H3	UE20843	MUCSR-18-H3	
		UI20843	MUCSR-18-H3	
CL20844	MUCSR-24-H3	UE20844	MUCSR-24-H3	
		UI20844	MUCSR-24-H3	

Click on the reference number to go to the info page

Set		Component		Reference
Code	Model	Code	Model	
CL20845	MUSTR-30-H3	UE20855	MUSTR-30-H3	11
		UI20845	MUCSR-30-H3	
CL20846	MUCSR-36-H3	UE20846	MUCSR-36-H3	
		UI20846	MUCSR-36-H3	
CL20847	MUCSR-42-H3	UE20847	MUCSR-42-H3	
		UI20847	MUCSR-42-H3	
CL20848	MUCSR-48-H3	UE20848	MUCSR-48-H3	
		UI20848	MUCSR-48-H3	
CL20849	MUCSR-60-H3	UE20849	MUCSR-60-H3	
		UI20849	MUCSR-60-H3	
CL20853	MUSTR-18-H3	UE20853	MUSTR-18-H3	
		UI20853	MUSTR-18-H3	
CL20854	MUSTR-24-H3	UE20854	MUSTR-24-H3	
		UI20854	MUSTR-24-H3	
CL20855	MUSTR-30-H3	UE20855	MUSTR-30-H3	
		UI20855	MUSTR-30-H3	
CL20856	MUSTR-36-H3	UE20856	MUSTR-36-H3	
		UI20856	MUSTR-36-H3	
CL20857	MUSTR-42-H3	UE20857	MUSTR-42-H3	
		UI20857	MUSTR-42-H3	
CL20858	MUSTR-48-H3	UE20858	MUSTR-48-H3	
		UI20858	MUSTR-48-H3	
CL20859	MUSTR-60-H3	UE20859	MUSTR-60-H3	
		UI20859	MUSTR-60-H3	
CL20862	MUCR-12-H3	UE20862	MUCR-12-H3	
		UI20862	MUCR-12-H3	
CL20863	MUCR-18-H3	UE20863	MUCR-18-H3	
		UI20863	MUCR-18-H3	
CL20864	MUCR-24-H3	UE20864	MUCR-24-H3	
		UI20864	MUCR-24-H3	
CL20865	MUCR-30-H3	UE20865	MUCR-30-H3	
		UI20865	MUCR-30-H3	
CL20866	MUCR-36-H3	CL20866	MUCR-36-H3	
		UI20866	MUCR-36-H3	
CL20867	MUCR-42-H3	UE20867	MUCR-42-H3	
		UI20867	MUCR-42-H3	
CL20868	MUCR-48-H3	UE20868	MUCR-48-H3	
		UI20868	MUCR-48-H3	
CL20869	MUCR-60-H3	UE20869	MUCR-60-H3	
		UI20869	MUCR-60-H3	
CL20681	MUCH-20-H4	UE20681	MUCH-20-H4	12
		UI20681	MUCH-20-H4	
CL20682	MUCH-25-H4	UE20682	MUCH-25-H4	
		UI20682	MUCH-25-H4	
CL20683	MUCH-30-H4	UE20683	MUCH-30-H4	
		UI20683	MUCH-30-H4	
CL20684	MUCH-40-H4	UE20684	MUCH-40-H4	
		UI20684	MUCH-40-H4	

Click on the reference number to go to the info page

Set		Component		Reference
Code	Model	Code	Model	
CL20390	MUCO-48-H6T	UE20390	MUCO-48-H6T	12
		UI20390	MUCO-48-H6T	
CL20391	MUCO-60-H6T	UE20391	MUCO-60-H6T	
		UI20391	MUCO-60-H6T	
CL20398	MUCO-48-H4	UE20398	MUCO-48-H4	
		UI20398	MUCO-48-H4	
CL20399	MUCO-60-H4	UE20399	MUCO-60-H4	
		UI20399	MUCO-60-H4	
		HU10530	MH-10-V5	
		HU10531	MH-20-V5	
		HU10504	MH-40-V5	13
		HU10533	MH-20-V9	
		HU10534	MH-30-V9	
		HU10535	MH-50-V9	
		CL20014	MUPO-12-H9	
		CL20080	MUPO-07-C4	
		CL20081	MUPO-12-H4	
		CL20082	MUPO-09-H4	
		CL20006	MUPO-07-C6	
		CL20007	MUPO-09-H6	
		CL20008	MUPO-12-H6	
		CL20010	MUPO-09-H8	
		CL20011	MUPO-12-H8	
		CL20102	MUPO-07-C12	
		CL20103	MUPO-09-C12	
		CL20104	MUPO-12-H12	
		CL20009	MUPO-07-C7	
		CL20013	MUPO-07-C9	
		CL20019	MUPO-09-H9	
		CL20020/CL20108	MUPO-07-C10/C15	
		CL20021/CL20109	MUPO-09-H10/H15	
		CL20101	MUSER-12-H12	14
		HU10540	MHC-60	15
		HU10541	MHC-96	
		CL20382	MUVR-09-C9	16
		CL20383	MUVR-12-C9	
		CL20380	MUVR-09-C6	17
		CL20381	MUVR-12-C6	
		CL20384	MUVR-12-H10	
		CL23120	MVD-D28Q4/N1-D	18
		CL23121	MVD-D36Q4/N1-D	
		CL23122	MVD-D45Q4/N1-D	
		CL23123	MVD-D56Q4/N1-D	
		CL23124	MVD-D71Q4/N1-D	
		CL23125	MVD-D80Q4/N1-D	
		CL23126	MVD-D90Q4/N1-D	
		CL23127	MVD-D112Q4/N1-D	
		CL23128	MVD-D140Q4/N1-D	

Click on the reference number to go to the info page

Set		Component		Reference
Code	Model	Code	Model	
		CL23130	MVD-D22Q4/N1-A3	18
		CL23131	MVD-D28Q4/N1-A3	
		CL23132	MVD-D36Q4/N1-A3	
		CL23133	MVD-D45Q4/N1-A3	
		CL23140	MVD-D22Q2/N1	
		CL23141	MVD-D28Q2/N1	
		CL23142	MVD-D36Q2/N1	
		CL23143	MVD-D45Q2/N1	
		CL23144	MVD-D56Q2/N1	
		CL23145	MVD-D71Q2/N1	
		CL23150	MVD-D28Q1/N1-D	
		CL23151	MVD-D36Q1/N1-D	
		CL23152	MVD-D45Q1/N1-C	
		CL23153	MVD-D56Q1/N1-C	
		CL23320	MVD-28Q4/DHN1-D	
		CL23321	MVD-36Q4/DHN1-D	
		CL23322	MVD-45Q4/DHN1-D	
		CL23323	MVD-56Q4/DHN1-D	
		CL23324	MVD-71Q4/DHN1-D	
		CL23325	MVD-80Q4/DHN1-D	
		CL23326	MVD-90Q4/DHN1-D	
		CL23327	MVD-112Q4/DHN1-D	
		CL23328	MVD-140Q4/DHN1-D	
		CL23330	MVD-22Q4/DHN1-A3	
		CL23331	MVD-28Q4/DHN1-A3	
		CL23332	MVD-36Q4/DHN1-A3	
		CL23333	MVD-45Q4/DHN1-A3	
		CL23343	MVD-56Q4/DHN1-D	
		CL23344	MVD-71Q4/DHN1-D	
		CL23345	MVD-80Q4/DHN1-D	
		CL23346	MVD-90Q4/DHN1-D	
		CL23347	MVD-112Q4/DHN1-D	
		CL23348	MVD-140Q4/DHN1-D	
		CL23350	MVD-22Q4/DHN1-A3	
		CL23351	MVD-28Q4/DHN1-A3	
		CL23352	MVD-36Q4/DHN1-A3	
		CL23353	MVD-45Q4/DHN1-A3	
		CL23500	MVD-D22GN1	
		CL23501	MVD-D28GN1	
		CL23502	MVD-D36GN1	
		CL23503	MVD-D45GN1	
		CL23504	MVD-D56GN1	
		CL23505	MVD-D71GN1	
		CL23506	MVD-D80GN1	
		CL23507	MVD-D90GN1	
		CL23510	MVD-22Q4CDN1	
		CL23511	MVD-28Q4CDN1	
		CL23512	MVD-36Q4CDN1	

Click on the reference number to go to the info page

Set		Component		Reference
Code	Model	Code	Model	
		CL23513	MVD-45Q4CDN1	18
		CL23514	MVD-56Q4DN1	
		CL23515	MVD-71Q4DN1	
		CL23516	MVD-80Q4DN1	
		CL23517	MVD-90Q4DN1	
		CL23518	MVD-112Q4DN1	
		CL23519	MVD-140Q4DN1	
		CL23520	MVD-22T2DN1	
		CL23521	MVD-28T2DN1	
		CL23522	MVD-36T2DN1	
		CL23523	MVD-45T2DN1	
		CL23524	MVD-56T2DN1	
		CL23525	MVD-71T2DN1	
		CL23526	MVD-80T2DN1	
		CL23527	MVD-90T2DN1	
		CL23528	MVD-112T2DN1	
		CL23529	MVD-140T2DN1	
		CL23530	MVD-160T1DN1	
		CL23530	MVD-200T1DN1	
		CL23532	MVD-250T1DN1	
		CL23533	MVD-280T1DN1	
		CL23534	MVD-400T1DN1	
		CL23535	MVD-450T1DN1	
		CL23536	MVD-560T1DN1	
		CL23540	MVD-125FADN1	
		CL23541	MVD-140FADN1	
		CL23542	MVD-200FADN1	
		CL23543	MVD-250FADN1	
		CL23544	MVD-280FADN1	
		CL23550	MVD-36DLDN1	
		CL23551	MVD-45DLDN1	
		CL23552	MVD-56DLDN1	
		CL23553	MVD-71DLDN1	
		CL23554	MVD-80DLDN1	
		CL23555	MVD-90DLDN1	
		CL23556	MVD-112DLDN1	
		CL23557	MVD-140DLDN1	
		CL23560	MVD-22GDN1	
		CL23561	MVD-28GDN1	
		CL23562	MVD-36GDN1	
		CL23563	MVD-45GDN1	
		CL23564	MVD-56GDN1	
		CL23565	MVD-71GDN1	
		CL23566	MVD-80GDN1	
		CL23567	MVD-90GDN1	
		CL23570	MVD-22ZDN1	
		CL23571	MVD-28ZDN1	
		CL23572	MVD-36ZDN1	

Click on the reference number to go to the info page

Set		Component		Reference
Code	Model	Code	Model	
		CL23573	MVD-45ZDN1	18
		CL23580	MVD-22F4DN1	
		CL23581	MVD-28F4DN1	
		CL23582	MVD-36F4DN1	
		CL23583	MVD-45F4DN1	
		CL23584	MVD-56F4DN1	
		CL23585	MVD-71F4DN1	
		CL23586	MVD-80F4DN1	
		CL23590	MVD-22F3DN1	
		CL23591	MVD-28F3DN1	
		CL23592	MVD-36F3DN1	
		CL23593	MVD-45F3DN1	
		CL23594	MVD-56F3DN1	
		CL23595	MVD-71F3DN1	
		CL23596	MVD-80F3DN1	
CL23903	MUCHR-16-H6	CL23267	MVD-V160W/DRN1	22
		CL23380	MVD-160T1/DHN1-B	18
CL23904	MUCHR-20-H6	CL23381	MVD-200T1/DHN1-B	
		CL23269	MVD-V200W/DRN1	23
CL23905	MUCHR-22-H6	CL23382	MVD-250T1/DHN1-B	18
		CL23270	MVD-V224W/DRN1	23
CL23906	MUCHR-26-H6	CL23383	MVD-280T1/DHN1-B	18
		CL23271	MVD-V260W/DRN1	23
CL23907	MUCHR-28-H6A	CL23383	MVD-280T1/DHN1-B	18
		CL23301	MVD-V5X280W/V2GN1	30
CL23908	MUCHR-45-H6	CL23185	MVD-D450T1/N1	18
		CL23273	MVD-V450W/DRN1	23
CL23909	MUCHR-40-H6A	CL23184	MVD-D400T1/N1	18
		CL23303	MVD-V5X400W/V2GN1	30
CL23910	MUCHR-45-H6A	CL23185	MVD-D450T1/N1	18
		CL23304	MVD-V5X450W/V2GN1	30
CL23911	MUCHR-56-H6A	CL23189	MVD-D560T1/N1-F	18
		CL23306	MVD-V5X560W/V2GN1	30
CL23912	MUCHR-40-H6	CL23187	MVD-D400T1/N1-F	18
		CL23272	MVD-V400W/DRN1	23
CL23913	MUCHR-45-H6	CL23273	MVD-V450W/DRN1	
		CL23185	MVD-D450T1/N1	18
CL23915	MUCHR-20-H8	CL23531	MVD-200T1DN1	
		CL23269	MVD-V200W/DRN1	23
CL23916	MUCHR-22-H8	CL23532	MVD-250T1DN1	18
		CL23270	MVD-V224W/DRN1	23
CL23917	MUCHR-26-H8	CL23533	MVD-280T1DN1	18
		CL23271	MVD-V260W/DRN1	23
CL23918	MUCHR-40-H8	CL23534	MVD-400T1DN1	18
		CL23272	MVD-V400W/DRN1	23
CL23919	MUCHR-45-H8	CL23273	MVD-V450W/DRN1	
		CL23535	MVD-450T1DN1	18

Click on the reference number to go to the info page

Set		Component		Reference
Code	Model	Code	Model	
CL23920	MUCHR-28-H8A	CL23533	MVD-280T1DN1	18
		CL23301	MVD-V5X280W/V2GN1	30
CL23921	MUCHR-40-H8A	CL23534	MVD-400T1DN1	18
		CL23303	MVD-V5X400W/V2GN1	30
CL23922	MUCHR-45-H8A	CL23535	MVD-450T1DN1	18
		CL23304	MVD-V5X450W/V2GN1	30
CL23923	MUCHR-56-H8A	CL23536	MVD-560T1DN1	18
		CL23306	MVD-V5X560W/V2GN1	30
CL23940	MUCHR-28-HV6M	CL23533	MVD-280T1DN1	18
		CL23274	MVD-V280W/DGN1	
CL23941	MUCHR-28-HV6X	CL23601	MVD-V6X280W/V2GN1	31
		CL23533	MVD-280T1DN1	18
CL23942	MUCHR-40-HV6X	CL23603	MVD-V6X400W/V2GN1	31
		CL23534	MVD-400T1DN1	18
CL23943	MUCHR-45-HV6X	CL23604	MVD-V6X450W/V2GN1	31
		CL23535	MVD-450T1DN1	18
CL23944	MUCHR-56-HV6X	CL23607	MVD-V6X615W/V2GN1	31
		CL23536	MVD-560T1DN1	18
CL23945	MUCHR-20-HV6M	CL23531	MVD-200T1DN1	
		CL23310	MVD-V6M200W/DRN1	19
CL23946	MUCHR-22-HV6M	CL23311	MVD-V6M224W/DRN1	
		CL23532	MVD-250T1DN1	18
CL23947	MUCHR-26-HV6M	CL23532	MVD-250T1DN1	
		CL23312	MVD-V6M260W/DRN1	19
CL23948	MUCHR-28-HV6M2	CL23533	MVD-280T1DN1	18
		CL23313	MVD-V6M280W/DRN1	19
CL23949	MUCHR-33-HV6X	CL23534	MVD-400T1DN1	18
		CL23602	MVD-V6X335W/V2GN1	31
CL23954	MUCHR-40-HV8M	CL23365	MVD-V8M400WV2RN1	20
		CL23534	MVD-400T1DN1	18
CL23955	MUCHR-45-HV8M	CL23366	MVD-V8M450WV2RN1	20
		CL23535	MVD-450T1DN1	18
CL23956	MUCHR-56-HV8M	CL23536	MVD-560T1DN1	
		CL23368	MVD-V8M560WV2RN1	20
CL20259	MUCHR-96-H7T	UI20259	MUCHR-96-H7T	18
		UE20259	MUCHR-96-H7T	23
CL21532	MUCHR-75-H7T	UI21532	MUCHR-75-H7T-I	18
		UE21532	MUCHR-75-H7T-E	23
CL21533	MUCHR-96-H7T	UI21533	MUCHR-96-H7T-I	18
		UE21533	MUCHR-96-H7T-E	23
CL21580	MUCHR-68-H14T	UI21580	MUCHR-68-H14T-I	21
		UE21580	MUCHR-68-H14T-E	19
CL21581	MUCHR-76-H14T	UI21581	MUCHR-76-H14T-I	21
		UE21581	MUCHR-76-H14T-E	19
CL21582	MUCHR-96-H14T	UI21582	MUCHR-96-H14T-I	21
		UE21582	MUCHR-96-H14T-E	19
CL21583	MUCHR-120-H14T	UI21583	MUCHR-120-H14T-I	21
		UE21583	MUCHR-120-H14T-E	19

Click on the reference number to go to the info page

Set		Component		Reference
Code	Model	Code	Model	
CL21584	MUCHR-140-H14T	UI21584	MUCHR-140-H14T-I	21
		UE21584	MUCHR-140-H14T-E	20
CL21585	MUCHR-150-H14T	UI21585	MUCHR-150-H14T-I	21
		UE21585	MUCHR-150-H14T-E	20
CL21586	MUCHR-192-H14T	UI21586	MUCHR-192-H14T-I	21
		UE21586	MUCHR-192-H14T-E	20
		CL23310	MVD-V6M200W/DRN1	19
		CL23311	MVD-V6M224W/DRN1	
		CL23312	MVD-V6M260W/DRN1	
		CL23313	MVD-V6M280W/DRN1	
		CL23314	MVD-V6M335W/DRN1	
		CL23365	MVD-V8M400WV2RN1	20
		CL23366	MVD-V8M450WV2RN1	
		CL23367	MVD-V8M500WV2RN1	
		CL23368	MVD-V8M560WV2RN1	
		CL23369	MVD-V8M615WV2RN1	
		CL23700	MVD-15Q4CN18	21
		CL23701	MVD-22Q4CN18	
		CL23702	MVD-28Q4CN18	
		CL23703	MVD-36Q4CN18	
		CL23704	MVD-45Q4CN18	
		CL23705	MVD-56Q4CN18	
		CL23706	MVD-63Q4CN18	
		CL23710	MVD-71Q4N18	
		CL23711	MVD-80Q4N18	
		CL23712	MVD-90Q4N18	
		CL23713	MVD-112Q4N18	
		CL23714	MVD-140Q4N18	
		CL23715	MVD-160Q4N18	
		CL23716	MVD-180Q4N18	
		CL23720	MVD-15T2N18	
		CL23721	MVD-22T2N18	
		CL23722	MVD-28T2N18	
		CL23723	MVD-36T2N18	
		CL23724	MVD-45T2N18	
		CL23725	MVD-56T2N18	
		CL23726	MVD-71T2N18	
		CL23727	MVD-80T2N18	
		CL23728	MVD-112T2N18	
		CL23729	MVD-140T2N18	
		CL23730	MVD-160T1N18	
		CL23731	MVD-200T1N18	
		CL23732	MVD-252T1N18	
		CL23733	MVD-280T1N18	
		CL23734	MVD-335T1N18	
		CL23735	MVD-400T1N18	
		CL23736	MVD-450T1N18	
		CL23737	MVD-560T1N18	

Click on the reference number to go to the info page

Set		Component		Reference
Code	Model	Code	Model	
		CL23760	MVD-15GN18	21
		CL23761	MVD-22GN18	
		CL23762	MVD-28GN18	
		CL23763	MVD-36GN18	
		CL23764	MVD-45GN18	
		CL23765	MVD-56GN18	
		CL23766	MVD-71GN18	
		CL23767	MVD-80GN18	
		CL23770	MVD-22F5N18	
		CL23771	MVD-28F5N18	
		CL23772	MVD-36F5N18	
		CL23773	MVD-45F5N18	
		CL23774	MVD-56F5N18	
		CL23775	MVD-71F5N18	
		CL23776	MVD-80F5N18	
		CL23780	MVD-22F3N18	
		CL23781	MVD-28F3N18	
		CL23782	MVD-36F3N18	
		CL23783	MVD-45F3N18	
		CL23784	MVD-56F3N18	
		CL23785	MVD-71F3N18	
		CL23786	MVD-80F3N18	
		CL23260	MVD-V80W/DN1	22
		CL23261	MVD-V105W/DN1	
		CL23262	MVD-V120W/DN1	
		CL23263	MVD-V140W/DN1	
		CL23264	MVD-V160W/DN1(B)	
		CL23265	MVD-V120W/DRN1	
		CL23266	MVD-V140W/DRN1	
		CL23267	MVD-V160W/DRN1	
		CL23268	MVD-V180W/DRN1	
		CL23269	MVD-V200W/DRN1	23
		CL23270	MVD-V224W/DRN1	
		CL23271	MVD-V260W/DRN1	
		CL23272	MVD-V400W/DRN1	
		CL23273	MVD-V450W/DRN1	
		CL23290	MVD-V6M80W/DN1	24
		CL23291	MVD-V6M100W/DN1	
		CL23292	MVD-V6M120W/DN1	
		CL23293	MVD-V6M140W/DN1	
		CL23294	MVD-V6M160W/DN1	
		CL23310	MVD-V6M200W/DRN1	25
		CL23311	MVD-V6M224W/DRN1	
		CL23312	MVD-V6M260W/DRN1	
		CL23313	MVD-V6M280W/DRN1	
		CL23314	MVD-V6M335W/DRN1	
		CL23274	MVD-V280W/DGN1	
		CL23275	MVD-V335W/DGN1	

Click on the reference number to go to the info page

Set		Component		Reference
Code	Model	Code	Model	
		CL23640	MVD-V8M80WDN8	26
		CL23641	MVD-V8M100WDN8	
		CL23642	MVD-V8M120WDN8	
		CL23643	MVD-V8M140WDN8	
		CL23644	MVD-V8M160WDN8	
		CL23362	MVD-V8M252WDRN1	27
		CL23363	MVD-V8M280WDRN1	
		CL23364	MVD-V8M335WDRN1	
		CL23365	MVD-V8M400WV2RN1	
		CL23366	MVD-V8M450WV2RN1	
		CL23367	MVD-V8M500WV2RN1	
		CL23368	MVD-V8M560WV2RN1	
		CL23369	MVD-V8M615WV2RN1	
		CL23110	MVD-D252(8)W/RN1-B	28
		CL23111	MVD-D280(10)W/RN1-B	
		CL23112	MVD-D335(12)W/RN1-B	
		CL23113	MVD-D400(14)W/RN1-B	
		CL23114	MVD-D450(16)W/RN1-B	
		CL23115	MVD-252(8)W/D2RN1T(C)	29
		CL23116	MVD-280(10)W/D2RN1T©	
		CL23117	MVD-335(12)W/D2RN1T(C)	
		CL23118	MVD-400(14)W/D2RN1T©	
		CL23119	MVD-450(16)W/D2RN1T(C)	
		CL23300	MVD-V5X252W/V2GN1	30
		CL23301	MVD-V5X280W/V2GN1	
		CL23302	MVD-V5X335W/V2GN1	
		CL23303	MVD-V5X400W/V2GN1	
		CL23304	MVD-V5X450W/V2GN1	
		CL23305	MVD-V5X500W/V2GN1	
		CL23306	MVD-V5X560W/V2GN	
		CL23307	MVD-V5X615W/V2GN1	
		CL23600	MVD-V6X252W/V2GN1	31
		CL23601	MVD-V6X280W/V2GN1	
		CL23602	MVD-V6X335W/V2GN1	
		CL23603	MVD-V6X400W/V2GN1	
		CL23604	MVD-V6X450W/V2GN1	
		CL23605	MVD-V6X500W/V2GN1	
		CL23606	MVD-V6X560W/V2GN1	
		CL23607	MVD-V6X615W/V2GN1	
		CL23608	MVD-V6X670W/V2GN1	
		CL23609	MVD-V6X730W/V2GN1	
		CL23610	MVD-V6X785W/V2GN1	
		CL23611	MVD-V6X850W/V2GN1	
		CL23612	MVD-V6X900W/V2GN1	
		CL23650	MVD-V8X252W/V2GN1	32
		CL23651	MVD-V8X280W/V2GN1	
		CL23652	MVD-V8X335W/V2GN1	
		CL23653	MVD-V8X400W/V2GN1	

Click on the reference number to go to the info page

Set		Component		Reference
Code	Model	Code	Model	
		CL23654	MVD-V8X450W/V2GN1	32
		CL23655	MVD-V8X500W/V2GN1	
		CL23656	MVD-V8X560W/V2GN1	
		CL23657	MVD-V8X615W/V2GN1	
		CL23658	MVD-V8X670W/V2GN1	
		CL23659	MVD-V8X730W/V2GN1	
		CL23660	MVD-V8X785W/V2GN1	
		CL23661	MVD-V8X850W/V2GN1	
		CL23662	MVD-V8X900W/V2GN1	
		CL23620	MVD-V6R252W/V2GN1	33
		CL23621	MVD-V6R280W/V2GN1	
		CL23622	MVD-V6R335W/V2GN1	
		CL23623	MVD-V6R400W/V2GN1	
		CL23624	MVD-V6R450W/V2GN1	
		CL23625	MVD-V6R500W/V2GN1	
		CL23811	MVH-H28Q4CDN1	34
		CL23813	MVH-H45Q4CDN1	
		CL23814	MVH-H56Q4DN1	
		CL23816	MVH-H80Q4DN1	
		CL23817	MVH-H112Q4DN1	
		CL23818	MVH-H140Q4DN1	
		CL23819	MVH-H160Q4DN1	
		CL23821	MVH-H28T2DN1	
		CL23823	MVH-H45T2DN1	
		CL23825	MVH-H71T2DN1	
		CL23827	MVH-H90T2DN1	
		CL23829	MVH-H150T2N1	
		CL23840	MVH-H22GDN1	
		CL23842	MVH-H36GDN1	
		CL23844	MVH-H56GDN1	
		CL23800	MVH-H140C/DGN1A	35
		CL23801	MVH-H160C/DGN1A	
		CL23802	MVH-H224C/DGN1	
		CL23809	MVH-H100C/DN1	
		CL25640	MUENR-05-H12	36
		CL25641	MUENR-07-H12	
		CL25642	MUENR-09-H12	
		CL25643	MUENR-12-H12	
		CL25644	MUENR-14-H12	
		CL25645	MUENR-16-H12	
		CL25646	MUENR-12-H12T	
		CL25647	MUENR-14-H12T	
		CL25648	MUENR-16-H12T	
		CL25652	MUENR-75-H12T	37
		CL25653	MUENR-75-H12T(K)	
		CL25654	MUENR-90-H12T	
		CL25655	MUENR-90-H12T(K)	
		CL25656	MUENR-140-H12T	

Click on the reference number to go to the info page

Set		Component		Reference
Code	Model	Code	Model	
		CL25657	MUENR-140-H12T(K)	37
		CL25658	MUENR-180-H12T	
		CL25659	MUENR-180-H12T(K)	
		CL25610	MUENR-05-H4	38
		CL25611	MUENR-07-H4	
		CL25612	MUENR-10-H4	
		CL25613	MUENR-12-H4	
		CL25614	MUENR-14-H4	
		CL25615	MUENR-16-H4	
		CL25620	MUENR-05-H6	
		CL25621	MUENR-07-H6	
		CL25622	MUENR-10-H6	
		CL25623	MUENR-12-H6	
		CL25626	MUENR-12-H6T	
		CL25627	MUENR-14-H6T	
		CL25628	MUENR-16-H6T	
		CL25601	MUEN-05-HG R410	39
		CL25602	MUEN-10-HG R410	
		CL25603	MUEN-15-HG R410	
		CL25604	MUEN-30-HG	
		CL25605	MUEN-65-HG	
		CL25616	MUEN-30-H6T	
		CL25617	MUEN-65-H6T	
		CL25630	MUENR-30-H7T	40
		CL25631	MUENR-30-H7T(K)	
		CL25632	MUENR-60-H7T	
		CL25633	MUENR-60-H7T(K)	
		CL25634	MUENR-30-H7T(K2)	
		CL25635	MUENR-30-H9T	41
		CL25636	MUENR-30-H9T(K)	
		CL25637	MUENR-60-H9T	
		CL25638	MUENR-60-H9T(K)	
		CL04325	MUP-09-W9	42
		CL04326	MUP-12-W9	
		CL04327	MUP-16-W9	
		CL04328	MUP-18-W9	
		CL04315	MUP-07-W7	
		CL04316	MUP-09-W7	
		CL04317	MUP-12-W7	
		CL04318	MUP-18-W7	
		CL04312	MUP-09-WF	
		CL04313	MUP-12-WF	42
		CL04314	MUP-18-WF	
		CL04433	MUCS-20-W9	
		CL04434	MUCS-24-W9	
		CL04435	MUCS-36-W9	
		CL04420	MUCS-14-W7	
		CL04421	MUCS-16-W7	

Click on the reference number to go to the info page

Set		Component		Reference
Code	Model	Code	Model	
		CL04422	MUCS-20-W7	42
		CL04423	MUCS-24-W7	
		CL04424	MUCS-36-W7	
		CL04401	MUCSW-09-HG	
		CL04402	MUCSW-12-HG	
		CL04403	MUCSW-16-HG	
		CL04405	MUCSW-18-HG	
		CL04406	MUCSW-21-HG	
		CL04407	MUCSW-24-HG	
		CL04409	MUCSW-36-HG	
		CL04410	MUCSW-42-HG	
		CL04411	MUCSW-48-HG	
		CL04413	MUCSW-60-HG	
		CL04414	MUCSW-64-HG	
		CL04650	MUCM-09-W9	43
		CL04651	MUCM-12-W9	
		CL04652	MUCM-15-W9	
		CL04653	MUCM-19-W9	
		CL04654	MUCM-27-W9	
		CL04655	MUCM-30-W9	
		CL04656	MUCM-36-W9	
		CL04670	MUCM-09-W15	
		CL04671	MUCM-12-W15	
		CL04672	MUCM-15-W15	
		CL04673	MUCM-19-W15	
		CL04674	MUCM-27-W15	
		CL04675	MUCM-30-W15	
		CL04676	MUCM-36-W15	
		CL04580	MUC-07-W7/SE	44
		CL04581	MUC-11-W7/SE	
		CL04582	MUC-16-W7/SE	
		CL04583	MUC-19-W7/SE	
		CL04584	MUC-24-W7/SE	
		CL04585	MUC-07-WCE7	
		CL04586	MUC-11-WCE7	
		CL04587	MUC-16-WCE7	
		CL04588	MUC-19-WCE7	
		CL04589	MUC-24-WCE7	
		CL04590	MUC-07-W7/CE	
		CL04591	MUC-11-W7/CE	
		CL04592	MUC-16-W7/CE	
		CL04593	MUC-19-W7/CE	44
		CL04594	MUC-24-W7/CE	
		CL04620	MUCM-15-W7	
		CL04621	MUCM-19-W7	
		CL04622	MUCM-27-W7	
		CL04623	MUCM-30-W7	

Click on the reference number to go to the info page

Set		Component		Reference
Code	Model	Code	Model	
		CL04624	MUCM-36-W7	44
		CL04630	MUC-05-W9/SE	
		CL04631	MUC-08-W9/SE	
		CL04632	MUC-11-W9/SE	
		CL04633	MUC-16-W9/SE	
		CL04634	MUC-19-W9/SE	
		CL04635	MUC-24-W9/SE	
		CL04640	MUC-05-W9/CE	
		CL04641	MUC-08-W9/CE	
		CL04642	MUC-11-W9/CE	
		CL04643	MUC-16-W9/CE	
		CL04644	MUC-19-W9/CE	
		CL04645	MUC-24-W9/CE	
		CL25560	MUPIR-11-H9	45
		CL25561	MUPIR-17-H9	
		CL25562	MUPIR-17-H8	
		CL25563	MUPIR-21-H9	
		CL25563	MUPIR-21-H9(V2)	
		UI45301	MUACSM-100-H14-I	46
		UI45304	MUACSM-190-H14-I	
		CL45001	MUACS-80-H14	47
		CL45002	MUACS-100-H14	
		CL45004	MUACS-150-H14	
		CL45005	MUACS-190-H14	
		CL45008	MUACS-290-H14	
		CL45006	MUACS-200-H14	48
		CL45007	MUACS-300-H14	
		CL45016	MUACS-200S-H14	
		CL45017	MUACS-300S-H14	
		UE45100	MAB-4-V10M	49
		UE45101	MAB-6-V10M	
		UE45102	MAB-8-V10M	
		UE45103	MAB-10-V10M	
		UE45104	MAB-12-V10M	
		UE45105	MAB-14-V10M	
		UE45106	MAB-16-V10M	
		UE45107	MAB-12-V10T	
		UE45108	MAB-14-V10T	
		UE45109	MAB-16-V10T	
		UI45100	HR-4-6-V10M	
		UI45102	HR-8-10-V10M	
		UI45104	HR-12-14-16-V10M	
		UI45110	HR-4-6-190L-V10	49
		UI45112	HR-8-10-190L-V10M	
		UI45120	HR-4-6-240L-V10M	
		UI45122	HR-8-10-240L-V10M	
		UI45124	HR-12-14-16-240L-V10M	

Click on the reference number to go to the info page

Set		Component		Reference
Code	Model	Code	Model	
		CL45200	MAM-4-V10M	49
		CL45201	MAM-6-V10M	
		CL45202	MAM-8-V10M	
		CL45203	MAM-10-V10M	
		CL45204	MAM-12-V10M	
		CL45205	MAM-14-V10M	
		CL45206	MAM-16-V10M	
		CL45207	MAM-12-V10T	
		CL45208	MAM-14-V10T	
		CL45209	MAM-16-V10T	
		CL45210	MAM-18-V10T	50
		CL45211	MAM-22-V10T	
		CL45212	MAM-26-V10T	
		CL45213	MAM-30-V10T	
		CL45220	MUAMR-04-H14	51
		CL45221	MUAMR-06-H14	
		CL45222	MUAMR-08-H14	
		CL45223	MUAMR-10-H14	
		CL45224	MUAMR-12-H14	
		CL45225	MUAMR-14-H14	
		CL45226	MUAMR-16-H14	
		CL45227	MUAMR-12-H14T	
		CL45228	MUAMR-14-H14T	
		CL45229	MUAMR-16-H14T	

MUNDOCLIMA®

REFERENCE : 1

ERROR CODES EN

SERIES: **MUPR-H11** **MUPR-H11-I**
MUPR-H14X **MUPR-H14X-I**
MUPR-H10X **MUPR-H10X-I**

Code	Information
EH00/EH0R	Indoor unit EEPROM parameter error
EL01	Indoor / outdoor unit communication error
EH02	Zero-crossing signal detection error
EH30	Over low voltage protection of indoor external fan
EH31	Over voltage protection of indoor external fan
EH03	The indoor fan speed is operating outside of the normal range
EC51	Outdoor unit EEPROM parameter error
EC52	Condenser coil temperature sensor T3 is in open circuit or has short circuited
EC53	Outdoor room temperature sensor T4 is in open circuit or has short circuited
EC54	Compressor discharge temperature sensor TP is in open circuit or has short circuited
EC56	Evaporator coil outlet temperature sensor T2B is in open circuit or has short circuited
EH60	Indoor room temperature sensor T1 is in open circuit or has short circuited
EH61	Evaporator coil temperature sensor T2 is in open circuit or has short circuited
EC07	The outdoor fan speed is operating outside of the normal range(
EH0b	Indoor PCB/Display board communication error
EL0C	Refrigerant leak detected
PC0R	Condenser high temperature protection
PC00	IPM malfunction or IGBT over-strong current protection
PC0F	PFC module malfunction
PC01	Protection against overvoltage or undervoltage
PC02	Compressor top high temperature protection (OLP)
PC03	Pressure protection
PC04	Ipm inverter / compressor protection
PC10	Over low voltage protection
PC11	Over voltage protection
PC12	DC voltage protection
PC40	Communication error between outdoor main chip and compressor driven chip
PC41	Current Input detection protection
PC42	Compressor start error
PC43	Lack of phase (3 phase) protection
PC44	No speed protection
PC45	341PWM error
PC46	Compressor speed malfunction
PC49	Compressor over current protection

Continued on next page

MUNDOCLIMA®

REFERENCE : 1

ERROR CODES EN

SERIES: **MUPR-H11** **MUPR-H11-I**
MUPR-H14X **MUPR-H14X-I**
MUPR-H10X **MUPR-H10X-I**

Code	Information
PC06	Compressor discharge temperature protection
PC08	Outdoor current protection
PH09	Anti-cold air in heating mode
--	Conflict in the operating mode, only for multisplit systems
PC0L	Outdoor ambient temperature too low
PH90	Evaporator coil temperature over high protection
PH91	Evaporator coil temperature over low Protection
LC05	Frequency limit caused by voltage
LC03	Frequency limit caused by current
LC02	Frequency limit caused by TP
LC01	Frequency limit caused by T3
LH00	Frequency limit caused by T2
LC06	Frequency limit caused by PFC
LH07	Frequency limit caused by remote controller
nA	no malfuction or protection

Listado de códigos de función (los siguientes códigos no son códigos de error ni protección)

Code	Information
dF	Defrost
SC	Self clean
CL	Filter cleaning reminder (power on display for 15 seconds)
CL	Active clean (for some series)
nF	Filter replacement reminder (power on display for 15 seconds)
FP	Heating in room temperature under 8°C&12°C
FC	Forced cooling
AP	AP mode of WIFI connection
CP	Remote switched off

For other errors:

The display board may show a garbled code or a code undefined by the service manual. Ensure that this code is not a temperature reading.

For more information, or other codes, scan the following QR code and search for the machine model:

https://mp-service.vip/tsp/errorcode/index.html#/

Troubleshooting:

Test the unit using the remote control. If the unit does not respond to the remote, the indoor PCB requires replacement. If the unit responds, the display board requires replacement.

88 flash frequency:

MUNDOCLIMA®

REFERENCE : 2

ERROR CODES EN

SERIES: **MUPR-H3 MUPR-H6**
MUPR-H4 MUPR-H7

Code	Information
E0 / EA	Indoor unit EEPROM parameter error
E1	Indoor / outdoor units communication error
E2	Zero crossing detection error
E3	Indoor fan speed has been out of control
E4	Indoor room temperature sensor T1 open circuit or short circuit
E5	Evaporator coil temperature sensor T2 open circuit or short circuit
EC	Refrigerant leakage detection
E7	Communication error between the board and the display of the indoor unit
F0	Overload current protection
F1 / Fb	Outdoor ambient temperature sensor T4 open circuit or short circuit
F2 / Fb	Condenser coil temperature sensor T3 open circuit or short circuit
F3 / Fb	Compressor discharge temp sensor T5 open circuit or short circuit
F4	Outdoor unit EEPROM parameter error
F5	Outdoor fan speed has been out of control
P0	IPM malfunction or IGBT over-strong current protection
P1	Over voltage or over low voltage protection
P2	High temperature protection of compressor top diagnosis and solution
P4	Inverter compressor drive error
P5	Operating mode conflict (multi units only)
Pb	Low pressure protection (only for some models)
P10	Overvoltage protection
Eb / EH0b	Communication error between the indoor unit and the display board

For more information or other codes, scan the following QR code and search for the machine model

https://mp-service.vip/tsp/errorcode/index.html#/

MUNDOCLIMA®

REFERENCE : 3

ERROR CODES EN

SERIES: **MUPR-H5A** **MUPR-H5A2**
MUPR-H8A **MUPR-H5**
MUPR-H9A

Code	Information
E1	Indoor environment temprature sensor fault
E2	Outdoor pipe temprature sensor fault
E3	Indoor pipe temprature sensor fault
E4 / Fb	Indoor fan motor circuit fault
E5 / 5E	Indoor and outdoor communication failure
Eb / EF	Indoor Eeprom error
E8	Indoor main PCB and display board communication fault
F0	Outdoor fan motor fault
F2	Protection PFC (Change PCB)
F3	Compressor start failure
F4	Compressor exhaust sensor fault
F5	Compressor shell temperature protection /Compressor shell sensor fault
F6	Outdoor environment temprature sensor fault
F7	Low/over voltage protection
F8	Outdoor module communication fault
F9	Outdoor EEPROM fault
FA	Return gas sensor fault
F1	Module protection fault/ three-phase fault
L0	DC overvoltage error
L1	Compressor Phase current overcurrent protection
L2	Compressor Lost step protection
L3	Compressor phase error
L4	Compressor drive module IPM fault
L5	PFC overcurrent hardware protection
L6	PFC overcurrent software protection
L7	Current detection AD abnormal protection
LC	PFC current detection AD abnormal protection
L8	Shunt resistance unbalance fault: Compressor drive error
L9	IPM temperature sensor fault
LA	Compressor start failure
Ld / LE / LF / LH	DC fan motor protection (ODU)
P1	Water full alarm
P2 / PE	High-pressure protection (PE: High-pressure error)
P3	Fluoride deficiency protection
P4	refrigeration anti-overload protection fault locking
P5	Compressor discharge temp protection
P6	High temperature protection in heating room
P7	Indoor anti-freeze protection during cooling
P8 / E0	Outdoor/Indoor over-current protection
CL	Clean filter reminder

SERIES: **MULTISPLIT - H11**

Models: **MUEX-14-H11.2** **MUEX-28-H11.2**
MUEX-18-H11.2 **MUEX-36-H11.2**

Code	Information
E0	Outdoor EEPROM malfunction
E2	Indoor / outdoor units communication error
E3	Communication malfunction between IPM board and outdoor main board
E4	Open or short circuit of outdoor unit temperature sensor(T3,T4.T5)
E5	Voltage protection
E6	PFC module protection
E8	Outdoor fan speed has been out of control or compressor speed has been out of control
F1	No A Indoor unit coil outlet temperature sensor or connector of sensor is defective
F2	No B Indoor unit coil outlet temperature sensor or connector of sensor is defective
F3	No C Indoor unit coil outlet temperature sensor or connector of sensor is defective
F4	No D Indoor unit coil outlet temperature sensor or connector of sensor is defective
F5	No E Indoor unit coil outlet temperature sensor or connector of sensor is defective
P0	Top temperature protection of compressor
P1	High pressure protection (For MUEX-36-H11.4,MUEX-42-H11.5)
P2	Low pressure protection (For MUEX-36-H11.4, MUEX-42-H11.5)
P3	Current protection of compressor
P4	Temperature protection of compressor discharge
P5	High temperature protection of condenser
P6	IPM module protection
E9	24k indoor unit wiring error
LP	Low ambient temperature protection

Note: Once these error codes display, they will disappear in at least 30 seconds if the unit come back to normal. (Except E2&E3)

For errors in the multi-system indoor units, refer to the respective models with the designation “I”.

Continued on next page

SERIES: **MULTISPLIT - H11**

Models: **MUEX-18-H11.3** **MUEX-24-H11.4**
MUEX-21-H11.3 **MUEX-42-H11.5**
MUEX-27-H11.3

Code	Information
EC 51	Outdoor EEPROM malfunction
EL 01	Indoor / outdoor units communication error
PC 40	Communication malfunction between IPM board and outdoor main board
PC 08	Outdoor overcurrent protection
PC 10	Outdoor unit low AC voltage protection
PC 11	Outdoor unit main control board DC bus high voltage protection
PC 12	Outdoor unit main control board DC bus high voltage protection /341 MCE error
PC 00	IPM module protection
PC 0F	PFC module protection
EC 71	Over current failure of outdoor DC fan motor
EC 72	Lack phase failure of outdoor DC fan motor
EC 07	Outdoor fan speed has been out of control
PC 43	Outdoor compressor lack phase protection
PC 44	Outdoor unit zero speed protection
PC 45	Outdoor unit IR chip drive failure
PC 46	Compressor speed has been out of control
PC 49	Compressor overcurrent failure
PC 30	High pressure protection (For MUEX-42-H11.5)
PC 31	Low pressure protection (For MUEX-42-H11.5)

Continued on next page

SERIES: **MULTISPLIT - H11**

Models: **MUEX-18-H11.3** **MUEX-24-H11.4**
MUEX-21-H11.3 **MUEX-42-H11.5**
MUEX-27-H11.3

PC 0A	High temperature protection of condenser
PC 06	Temperature protection of compressor discharge
PC 0L	Low ambient temperature protection
PC 02	Top temperature protection of compressor
EC 52	Condenser coil temperature sensor T3 is in open circuit or has short circuited
EC 53	Outdoor room temperature sensor T4 is in open circuit or has short circuited
EC 54	Compressor discharge temperature sensor T5 is in open circuit or has short circuited
EC 56	Evaporator coil outlet temperature sensor T2B is in open circuit or has short circuited
EC 50	Open or short circuit of outdoor unit temperature sensor (T3,T4.T5)

For more information, or other codes, scan the following QR code and search for the machine model:
For errors on the indoor units of multi systems, refer to the respective models with the designation " I "

For more information or other codes, scan the following QR code and search for the machine model

https://mp-service.vip/tsp/errorcode/index.html#/

SERIES: **MULTISPLIT- H14**

Models: **MUEW-18-H14.2**
MUEW-27-H14.3

Error Display (Indoor Unit)

Code	Information
dF	Defrost
CL	Filter cleaning reminder(power on display for 15 seconds)
CL	Active clean
nF	Filter replacement reminder(power on display for 15 seconds)
FP	Heating in room temperature under 8°C
FC	Forced cooling
AP	AP mode of WIFI connection
CP	Remote switched off
EH 00	Indoor unit EEPROM parameter error
EL 01	Indoor/outdoor units communication error
EH02	Zero-crossing signal detection error(for some models)
EH 03	The indoor fan speed is operating outside of the normal range
EC 51	Outdoor unit EEPROM parameter error
EC 52	Condenser coil temperature sensor T3 is in open circuit or has short circuited
EC 53	Outdoor room temperature sensor T4 is in open circuit or has short circuited
EC 54	Compressor discharge temperature sensor TP is in open circuit or has short circuited
EC 56	Evaporator coil outlet temperature sensor T2B is in open circuit or has short circuited(for free-match indoor units)
EH 60	Indoor room temperature sensor T1 is in open circuit or has short circuited
EH 61	Evaporator coil middle temperature sensor T2 is in open circuit or has short circuited
EC 07	The outdoor fan speed is operating outside of the normal range
PC 00	IPM malfunction or IGBT over-strong current protection

Continued on next page

SERIES: **MULTISPLIT- H14**

Models: **MUEW-18-H14.2**
MUEW-27-H14.3

Code	Information
PC 01	Over voltage or over low voltage protection
PC 02	Compressor over-temperature or high temperature protection. IPM module protection or high pressure protection.
PC 04	Inverter compressor drive error
PC 08	Current overload protection
PC 03	High pressure protection or low pressure protection
--	Indoor units mode conflict(match with multi outdoor unit)
PC 40	Communication malfunction between IPM board and outdoor main board
PC 10	Outdoor unit low AC voltage protection
PC 11	Outdoor unit main control board DC bus high voltage protection
PC 12	Outdoor unit main control board DC bus high voltage protection /341 MCE error
PC 0F	PFC module protection
EC 71	Over current failure of outdoor DC fan motor
EC 72	Lack phase failure of outdoor DC fan motor
EC 07	Outdoor fan speed has been out of control
PC 43	Outdoor compressor lack phase protection
PC 44	Outdoor unit zero speed protection
PC 45	Outdoor unit IR chip drive failure
PC 46	Compressor speed has been out of control
PC 49	Compressor overcurrent failure
PC 30	High pressure protection
PC 31	Low pressure protection

Continued on next page

SERIES: **MULTISPLIT- H14**

Models: **MUEW-18-H14.2**
MUEW-27-H14.3

Code	Information
PC 33	High pressure protection (tested high pressure sensor)
PC 0A	High temperature protection of condenser
PC 06	Temperature protection of compressor discharge
EC 56	Evaporator coil outlet temperature sensor T2B is in open circuit or has short circuited
EC 5C	High pressure sensor is in open circuit or has short circuited
EC 50	Open or short circuit of outdoor unit temperature sensor(T3,T4.TP)
LC 06	IPM module frequency limit shutdown/IPM high temperature protection
PC 0L	Low ambient temperature protection

SERIES: **MULTISPLIT - H6M; MULTISPLIT - H9M**

Models: **MUEX-H6.*** **MUEX-H9.***

Code	Information
E0	Outdoor EEPROM malfunction
E2	Indoor / outdoor units communication error outdoor/indoor
E3	Communication malfunction between IPM board and o
E4	Open or short circuit of outdoor unit temperature s
E5	Voltage protection
E8	Outdoor fan speed has been out of control
F1	No A Indoor unit coil outlet temperature sensor or connector of sensor is defective
F2	No B Indoor unit coil outlet temperature sensor or connector of sensor is defective
F3	No C Indoor unit coil outlet temperature sensor or connector of sensor is defective
F4	No D Indoor unit coil outlet temperature sensor or connector of sensor is defective
F5	No E Indoor unit coil outlet temperature sensor or connector of sensor is defective
P1	High pressure protection (For MUEX-28-H6.4, MUEX-36-H6.4, MUEX-42-H6.5)
P2	Low pressure protection (For 28, 36, 42)
P3	Current protection of compressor
P4	Temperature protection of compressor discharge
P5	High temperature protection of condenser
P6	IPM module protection
LP	Low ambient temperature protection

For more information or other codes, scan the following QR code and search for the machine model

https://mp-service.vip/tsp/errorcode/index.html#/

Continued on next page

SERIES: **MULTISPLIT - H6M** **MULTISPLIT - H9M**

Models: **MUPR-H6M** **MUCSR-H6M** **MUCR-H6M** **MUPR-H9M** **MUCSR-H9M** **MUCR-H9M** **MUCNR-H9M**

Table 1 Indoor unit error codes (Display error)

Nº	Code	Led Timer	Led Run Blinking	Information
1	E0 / EA	OFF	1	Indoor EEPROM malfunction
2	E1	OFF	2	Communication malfunction between indoor and outdoor units
3	E3	OFF	4	Indoor fan speed has been out of control
4	E4	OFF	5	Open or short circuit of T1 temperature sensor
5	E5	OFF	6	Open or short circuit of T2 temperature sensor
6	EC	OFF	7	Detección de fuga de refrigerante
7	EE	OFF	8	Water level alarm
8	E8	OFF	9	Communication error between the two indoor units (for twin system)
9	E9	OFF	10	Other errors in a twin systemÿ
10	Ed	OFF	11	Outdoor unit error (only for some models)
11	F0	ON	1	Overcurrent protection (For some units)
12	F1	ON	2	Open or short circuit of T4 temperature sensor
13	F2	ON	3	Open or short circuit of T3 temperature sensor
14	F3	ON	4	Open or short circuit of T5 temperature sensor
15	F4	ON	5	Outdoor EEPROM malfunction (For some units)
16	F5	ON	6	Outdoor fan speed is out of control
17	F6	ON	7	Open or short circuit of T2B temperature sensor (For multi system)
18	F7	ON	8	Communication error between auto-lifting panel and slim cassette with auto-lifting panel)
19	F8	ON	9	Auto-lifting panel is faulty (For slim cassette with auto-lifting panel)
20	F9	ON	10	Auto-lifting panel is not closed (For slim cassette with auto-lifting panel)
21	FA	ON	11	Error de comunicación interno en la unidad interior (Susutituir la placa de la ud. interior)
22	P0	Blinking	1	IPM module malfunction
23	P1	Blinking	2	Over voltage or over low voltage protection
24	P2	Blinking	3	High temperature protection at the compressor head
25	P3	Blinking	4	Too low ambient temperature protection
26	P4	Blinking	5	Rotor position protection of compressor
27	P5	Blinking	6	Mode conflict
28	P6	Blinking	7	Low pressure protection
29	P7		8	Inverter module temperature sensor error
30	CP	--	--	remote contact off activated

Table 2 Wired controller error codes (KJR-120G / AU-KJR-120G)

Nº	Code	Information
1	F0	Error of communication between wire controller and indoor unit
2	F1	The lifting filter function is abnormal
3	F2	The air inlet grill doesn't fit well of Super slim four-way cassette
4	E0	Error of power supply phase sequence
5	E1	Error of communication between indoor unit and outdoor unit
6	E2	T1 temp. sensor is abnormal
7	E3	T2A temp. sensor is abnormal
8	E4	T2B temp. sensor is abnormal
9	E5	T3/T4 temp. sensor is abnormal or compressor discharge temp. sensor is abnormal
10	E6	Zero crossing detection error
11	E7	EEPROM malfunction
12	E8	Fan speed out of control
13	E9	The communication between main board and the display board is abnormal
14	EA	Compressor over current protection (four times)
15	EB	IPM malfunction
16	ED	Outdoor unit malfunction
17	EE	Water-level alarm and other malfunction
18	EF	Other malfunction

SERIES: **MULTISPLIT - H3M**

Models: **MUEX-14-H3.2**
MUEX-18-H3.2
MUEX-24-H3.3
MUEX-28-H3.4
MUEX-42-H3.5

Code	Information	Error Type
U8	Zero cross detection circuit malfunction	Outdoor hardware
C5	Malfunction protection of jumper cap	Outdoor hardware
H6	Feedback of without IDU motor	Indoor hardware
F1	Indoor ambient temperature sensor is open/short circuited	Indoor hardware
F2	Indoor evaporator temperature sensor is open/short circui	Indoor hardware
b5	Liquid valve temperature sensor is open/short circuited	Outdoor hardware
b7	Gas valve temperature sensor is open/short circuited	Outdoor hardware
P7	Modular temperature sensor is open/short circuited	Outdoor hardware
F4	Outdoor ambient temperature sensor is open/short circui	Outdoor hardware
A5	Outdoor condenser inlet pipe temperature sensor is open/short circuited (commercial)	Outdoor hardware
F4	Outdoor condenser middle pipe temperature sensor is open/short circuited	Outdoor hardware
A7	Outdoor condenser outlet pipe temperature sensor is open/short circuited (commercial)	Outdoor hardware
F5	Outdoor discharge pipe temperature sensor is open/shortcircuited	Outdoor hardware
E6	Communication malfunction	System Error
U1	Malfunction of phase current detection circuit for co	Outdoor hardware
HE	Compressor demagnetization protection	Outdoor hardware
U3	Malfunction of voltage dropping dor DC bus - bar	Outdoor hardware
P8	Module high temperature protection	Outdoor hardware
F0	Refrigerant lacking or blockage protection of systen	System Error
PU	Charging malfunction of capacitor	Outdoor hardware
E1	High pressure protection of system	System Error
E3	Low pressure protection of system (reserved)	System Error
H3	Compressor overload protection	Outdoor hardware
LP	Indoor unit and outdoor unit do not match	System Error
EE	Malfunction of memory chip	Outdoor hardware
dn	Wrong connection of communication wire or malfunctio	Outdoor hardware
U5	Malfunction of complete units current detection	Outdoor hardware
L3	Malfunction protection of outdoor fan 1	Outdoor hardware
dd	Detection status of wrong connection of communicatio or malfunction of electronic expansion valve	Outdoor hardware
E7	Mode conflict	System Error
Fo	Refrigerant recycling mode	Special Mode
AL	X-fan	
H1	Defrosting or oil return in heating mode	Special Mode
Lc	Start failure of compressor	Outdoor hardware
E4	High discharge temperature protection of compressor	System Error
E8	Overload protection	Outdoor hardware
E5	Whole unit overcurrent protection	Outdoor hardware
P5	Compressor phase current protection	Outdoor hardware
H7	Compressor desynchronizing	Outdoor hardware
Ld	Compressor phase-lacking / phase-inverse protection	Outdoor hardware
H5	IPM modular protection	Outdoor hardware
PL	DC bus - bar low voltage protection	Outdoor hardware
PH	DC bus - bar high voltage protection	Outdoor hardware
HC	PFC protection	Outdoor hardware
U7	The for-way valve is abnormal	Outdoor hardware

Continued on next page

SERIES: **MULTISPLIT - H3M**

Models: **MUEX-14-H3.2**
MUEX-18-H3.2
MUEX-24-H3.3
MUEX-28-H3.4
MUEX-42-H3.5

Code	Information	Error Type
ON	Normal running	-
08	Defrosting mode 1	Special Mode
0A	Defrosting mode 2	Special Mode
dd	Trial / Run operation	Special Mode
E1	High pressure protection	Outdoor
E2	Shutdown for whole unit anti-freeze protection	System Error
E3	Low pressure ptrotection	Outdoor
E4	High discharge temp. Protection	Outdoor
E5	Whole unit over-current protection	Outdoor
E6	Cimunication error	Outdoor + Indoor
E8	Cooling overload protection	System Error
E9	Indoor unit water full error	Indoor
OC	Heating overload protection	System Error
F0	Refrigerant recovery mode	Special Mode
F3	Outdoor ambient temperature sensor error (RT2)	Outdoor
F4	Outdoor mid-coil temperaure sensor error (RT1)	Outdoor
F5	Outdoor discharge temperature sensor error (RT3)	Outdoor
F7	Oil return for cooling	Special Mode
❄	Led status- Oir return for heating or defrosting	Special Mode
H1	Forced defrosting	Special Mode
H3	Compressor overheat protection	Drive error
H5	IPM protection	Drive error
H7	Motor desynchronizing	Drive error
Hc	PFC error	Drive error
Lc	Startup failure	Drive error
LA	DC fan motor error	Outdoor
H6	No indoor fan motor	Indoor
U1	Compressor phase circuit detection error	Outdoor
U3	DC link voltage drop error	Outdoor
U8	Zero detection circuit error	Outdoor
Ld	Phase loss	Drive error
L9	Too high power protection	System Error
LE	Compressor stalling	Outdoor
LF	Over-Speed	Drive error
P0	IPM reset	Drive error
P5	Compressor current protection	Drive error
P6	Comunication error between the inverter drive and the main controler	Drive error
P7	Radiator temp. sensor error	Drive error
P8	Ratiator overheat protection	Drive error
P9	AC contactor protection	Drive error
Pc	Current sensor error	Drive error
Pd	Sensor connection protection	Drive error
PH	Over voltage protection	Drive error
PL	Low voltage protection	Drive error
PE	Temp. Drift protection	Drive error
PF	Drive board ambient temperature sensor error	Drive error
PA	AC current protection	Drive error
PU	Charging circuit error	Drive error
PP	AC input voltage anomaly	Drive error

Continued on next page

SERIES: **MULTISPLIT - H3M**

Models: **MUEX-14-H3.2**
MUEX-18-H3.2
MUEX-24-H3.3
MUEX-28-H3.4
MUEX-42-H3.5

Code	Information	Error Type
11	Unit A comunication error	Indoor A
12	Unit A indoor pipe midway temperature sensor error (Indoo	
13	Unit A indoor unit pipe outlet temperature sensor error	
14	Unit A indoor pipe inlet temperatue sensor error (RT6)	
15	Unit A indoor ambient temperature sensor error (Indoor RT1	
16	Unit A mode conflict	
17	Unit A anti-freezing protection	
21	Unit B comunication error	Indoor B
22	Unit B indoor pipe midway temperature sensor error (Indoo	
23	Unit B indoor unit pipe outlet temperature sensor error	
24	Unit B indoor pipe inlet temperatue sensor error (RT8)	
25	Unit B indoor ambient temperature sensor error (Indoor RT1	
26	Unit B mode conflict	
27	Unit B anti-freezing protection	
31	Unit C comunication error	Indoor C
32	Unit C indoor pipe midway temperature sensor error (Indoor RT2 or RT4)	
33	Unit C indoor unit pipe outlet temperature sensor error (RT11)	
34	Unit C indoor pipe inlet temperatue sensor error (RT10)	
35	Unit C indoor ambient temperature sensor error (Indoor RT1)	
36	Unit C mode conflict	
37	Unit C anti-freezing protection	
41	Unit D comunication error	Indoor D
42	Unit D indoor pipe midway temperature sensor error (Indoor RT2 or RT4)	
43	Unit D indoor unit pipe outlet temperature sensor error (RT13)	
44	Unit D indoor pipe inlet temperatue sensor error (RT12)	
45	Unit D indoor ambient temperature sensor error (Indoor RT1)	
46	Unit D mode conflict	
47	Unit D anti-freezing protection	
51	Unit E comunication error	Indoor E
52	Unit E indoor pipe midway temperature sensor error (Indoor RT2 or RT4)	
53	Unit E indoor unit pipe outlet temperature sensor error (RT15)	
54	Unit E indoor pipe inlet temperatue sensor error (RT14)	
55	Unit E indoor ambient temperature sensor error (Indoor RT1)	
56	Unit E mode conflict	
57	Unit E anti-freezing protection	
C5	Jumper terminal error	-

For more information or other codes, scan the following QR code and search for the machine model

https://mp-service.vip/tsp/errorcode/index.html#/

Continued on next page

MUNDOCLIMA®

REFERENCE : 7

ERROR CODES EN

SERIES: **MULTISPLIT - H3M**

Models: **MUPR-H3M**

Code	LED			Information
	Operation	Cooling	Heating	
U8	17 blinks			Zero crossing signal detection fault
C5	15 blinks			"Jumper terminal" fault
H6	11 blinks			Indoor unit ventilation malfunction
F1		1 blink		Open circuit or short circuit in the room temperature sensor (15Ω) indoor unit
F2		2 blinks		Open circuit or short circuit in the pipe temperature sensor (inner battery) (20kΩ) indoor unit
b5		19 blinks		Open circuit or short circuit in the temperature sensor, outdoor unit liquid valve RT5/RT7/RT9/RT11 (20kΩ)
b7		22 blinks		Open circuit or short circuit in the temperature sensor, outdoor unit gas valve RT4/RT6/RT8/RT10 (20kΩ)
P7			18 blinks	Open circuit or short circuit in the indoor unit IPM module room temperature sensor (inverter)
F3		3 blinks		Open circuit or short circuit in the outside temperature sensor (15kΩ) RT2 from outdoor unit
A5	--			Open circuit or short circuit in the pipe temperature sensor (inlet) (20kΩ) RT2 outdoor unit
F4		4 blinks		Open circuit or short circuit in the pipe temperature sensor RT3 (20kΩ) RT2 outdoor unit
A7	--			Open circuit or short circuit in the pipe temperature sensor (outlet) (20kΩ) RT2 outdoor unit
F5		5 blinks		Open circuit or short circuit in the discharge temperature sensor RT1 (50kΩ) RT2 outdoor unit
E6	6 blinks			Communication malfunction between indoor and outdoor
U1			12 blinks	Compressor phase detection circuit malfunction
HE			14 blinks	Compressor degaussing protection
U3			20 blinks	Malfunction due to power drop in bus DC hardware
P8			19 blinks	High temperature protection in module (inverter)
F0		10 blinks		Lock or leakage protection in the refrigerant circuit
PU			17 blinks	Charge condenser malfunction
E1	1 blink			High pressure protection
E3	3 blinks			Low pressure protection (reserved)
H3			3 blinks	Compressor overload protection
LP	19 blinks			Mismatch between indoor and outdoor unit
EE			15 blinks	EEPROM memory chip malfunction
U5		13 blinks		All units current detection malfunction
L3	23 blinks			Outdoor unit ventilation malfunction
E7	7 blinks			Operation mode mismatch (there are indoor units for heating and cooling at the same time)
Fo	1 blink	1 blink		Refrigerant recovery mode
--		1 blink every 10s		X-fan
--			1 blink every 10s	Defrost or oil return program in heating mode
Lc			11 blinks	Compressor starting fault
E4	4 blinks			High temperature protection in the compressor discharge
E8	8 blinks			High temperature protection
E5	5 blinks			Overcurrent protection in the power input
P5			15 blinks	Consumption protection in a compressor phase
H7			7 blinks	Compressor desynchronization
Ld	--			1 phase missing in the compressor / Inverted phase in the compressor
H5			5 blinks	IPM module protection (inverter)
PL			21 blinks	Low voltage protection in bus DC
PH		11 blinks		High voltage protection in bus DC
HC			6 blinks	PFC module protection
U7		20 blinks		4-way valve fault (working mode opposite position)

For more information or other codes, scan the following QR code and search for the machine model

https://mp-service.vip/tsp/errorcode/index.html#/

Continued on next page

MUNDOCLIMA®

REFERENCE : 7

ERROR CODES EN

SERIES: **MULTISPLIT - H3M**

Models: **MUPR-(7_12)-H3M**
MUCSR-(12_24)-H3M
MUCNR-(9_18)-H3M
MUSTR-(9_18)-H3M
MUCR-(9_24)-H3M

Code	LED			Information
	Run	Cooling	Heating	
b5 / B5		19 blinks		Open circuit or short circuit in the temperature sensor, outdoor unit liquid valve RTxx (20kΩ)
b7 / B7		22 blinks		Open circuit or short circuit in the temperature sensor, outdoor unit gas valve RTxx (20kΩ)
F0		10 blinks		Lock or leakage protection in the refrigerant circuit
F1		1 blink		Open circuit or short circuit in the room temperature sensor (15Ω) indoor unit
F2		2 blinks		Open circuit or short circuit in the pipe temperature sensor (inner battery) (20kΩ) indoor unit
F3		3 blinks		Open circuit or short circuit in the outside temperature sensor (15kΩ) RT2 from outdoor unit
F4		4 blinks		Open circuit or short circuit in the pipe temperature sensor RT1 (20kΩ) RT2 outdoor unit
F5		5 blinks		Open circuit or short circuit in the discharge temperature sensor RT3 (50kΩ) RT2 outdoor unit
E1	1 blink			High pressure protection
E2	2 blinks			Antifreezing protection
E3	3 blinks			Low pressure protection (reserved)
E4	4 blinks			High temperature protection in the compressor discharge
E6	6 blinks			Communication malfunction between indoor and outdoor
E7	7 blinks			Operation mode mismatch (there are indoor units for heating and cooling at the same time)
E8	8 blinks			Overload protection
E9		Continuous	Continuous	High level of condensates malfunction in the indoor unit
dd	Continuous	Continuous	Continuous	Test mode operation
Fo	Continuous	Continuous		Refrigerant recovery mode
P0	3 blinks	3 blinks	3 blinks	IPM module reset (inverter)
P5			15 blinks	Compressor overcurrent protection
P6	16 blinks			Communication malfunction between IPM module (inverter) and main PCB
P7			18 blinks	Open circuit or short circuit in the indoor unit IPM module room temperature sensor (inverter)
P8			19 blinks	High temperature protection in the heat sink
P9	3 blinks	3 blinks	3 blinks	Contactor protection AC
Pc	3 blinks	3 blinks	3 blinks	Current sensor fault
Pd	3 blinks	3 blinks	3 blinks	Protection in the sensor connection
PA	3 blinks	3 blinks	3 blinks	AC protection
PE	3 blinks	3 blinks	3 blinks	Temperature protection in the "Drift"
PF	3 blinks	3 blinks	3 blinks	High temperature protection in IPM module (inverter)
PL	3 blinks	3 blinks	3 blinks	Low voltage protection
PH	3 blinks	3 blinks	3 blinks	High voltage protection
PP	3 blinks	3 blinks	3 blinks	AC power input malfunction
PU			17 blinks	Charge circuit fault
H1			1 blink	Oil return program in heating or defrost
	Continuous			Forced defrost
H3			3 blinks	High temperature protection in the compressor
H5			5 blinks	IPM module protection (inverter)
H7			7 blinks	Compressor desynchronization
Hc			6 blinks	PFC module protection
L9	20 blinks			High voltage protection
Lc			11 blinks	Compressor starting fault
Ld	3 blinks	3 blinks	3 blinks	Loss phase
LE	3 blinks	3 blinks	3 blinks	Compressor blockage
LF	3 blinks	3 blinks	3 blinks	Speeding
A5	3 blinks	3 blinks	3 blinks	Open circuit or short circuit in the pipe temperature sensor (inlet) (20kΩ) RT2 outdoor unit
A7	3 blinks	3 blinks	3 blinks	Open circuit or short circuit in the pipe temperature sensor (outlet) (20kΩ) RT2 outdoor unit
En	3 blinks	3 blinks	3 blinks	Frequency limitation / module wear due to protection circuit
EU		6 blinks	6 blinks	Frequency limitation / module wear due to temperature protection
F6		6 blinks		Frequency limitation / wear due to overload
F8		8 blinks		Frequency limitation / module wear due to protection circuit
F9		9 blinks		Frequency limitation / module wear due to protection circuit
FH		2 blinks	2 blinks	Frequency limitation / module wear due to antifreezing temperature protection
HE			14 blinks	Compressor degaussing protection
LP	19 blinks			Mismatch between indoor and outdoor unit
U1			12 blinks	Compressor phase detection circuit malfunction
U3			20 blinks	Malfunction due to power drop in bus DC
dn	3 blinks	3 blinks	3 blinks	Faulty cable connection or bad electronic expansion valve operation

For more information or other codes, scan the following QR code and search for the machine model

https://mp-service.vip/tsp/errorcode/index.html#/

Continued on next page

MUNDOCLIMA®

REFERENCE : 7

ERROR CODES EN

SERIES: **MULTISPLIT - H3M**

Models: **MUPR-(7_12)-H3M**
MUCSR-(12_24)-H3M
MUCNR-(9_18)-H3M
MUSTR-(9_18)-H3M
MUCR-(9_24)-H3M

Code	LED			Information
	Operation	Cooling	Heating	
C5	15 blinks			"Jumper terminal" fault
H6	11 blinks			Indoor unit ventilation malfunction
U8	17 blinks			Zero crossing signal detection fault
F1		1 blink		Open circuit or short circuit in the room temperature sensor (15Ω) indoor unit
F2		2 blinks		Open circuit or short circuit in the pipe temperature sensor (inner battery) (20kΩ) indoor unit
b5		19 blinks		Open circuit or short circuit in the temperature sensor, outdoor unit liquid valve RT5/RT7/RT9/RT11 (20kΩ)
b7		22 blinks		Open circuit or short circuit in the temperature sensor, outdoor unit gas valve RT4/RT6/RT8/RT10 (20kΩ)
P7			18 blinks	Open circuit or short circuit in the indoor unit IPM module room temperature sensor (inverter)
F3		3 blinks		Open circuit or short circuit in the outside temperature sensor (15kΩ) RT2 from outdoor unit
F4		4 blinks		Open circuit or short circuit in the pipe temperature sensor RT1 (20kΩ) RT2 outdoor unit
F5		5 blinks		Open circuit or short circuit in the discharge temperature sensor RT3 (50kΩ) RT2 outdoor unit
E6	6 blinks			Communication malfunction between indoor and outdoor
U1			12 blinks	Compressor phase detection circuit malfunction
P8			19 blinks	High temperature protection in the heat sink
PU			17 blinks	Charge circuit fault
E1	1 blink			High pressure protection
H3			3 blinks	Compressor overload protection
dn	--			Faulty cable connection or bad electronic expansion valve operation
dd	--			Faulty cable connection or state sensor bad operation in the electronic expansion valve
E7	7 blinks			Operation mode mismatch (indoor units for heating and cooling at the same time)
Fo	1 blink	1 blink		Refrigerant recovery mode
H1			1 blink	Defrost or oil return program in heating mode
Lc			11 blinks	Compressor starting fault
E4	4 blinks			High temperature protection in the compressor discharge
E8	8 blinks			Overload protection
E5	5 blinks			Overcurrent protection in all unit
P5			15 blinks	Consumption protection in a compressor phase
H7			7 blinks	Compressor desynchronization
Ld	--			1 phase missing in the compressor / Inverted phase in the compressor
H5			5 blinks	IPM module protection (inverter)
PL			21 blinks	Low voltage protection in bus DC
PH		11 blinks		High voltage protection in bus DC
HC			6 blinks	PFC module protection
F8		8 blinks		Frequency limitation / module wear due to protection circuit
En	--			Frequency limitation / module wear due to protection circuit
F9		9 blinks		Frequency limitation / module wear due to protection circuit
FH		2 blinks	2 blinks	Frequency limitation / module wear due to antifreezing temperature protection
F6		6 blinks		Frequency limitation / wear due to overload
EU		6 blinks	6 blinks	Frequency limitation / module wear due to temperature protection
F7		7 blinks		Oil return program in heating mode
E9	9 blinks			Cold air protection
E2	2 blinks			Antifreezing protection

For more information or other codes, scan the following QR code and search for the machine model

https://mp-service.vip/tsp/errorcode/index.html#/

SERIES: **COMMERCIAL H11**

Models:

MUCNR-H11
MUCNR-H11-I
MUCOR-H11
MUCOR-H11T
MUCR-H11
MUCR-H11-I
MUCSR-H11
MUCSR-H11-I
MUSTR-H11

COMMERCIAL H14

MUCNR-H14
MUCNR-H14-I
MUCR-H14
MUCR-H14-I
MUCSR-H14
MUSTR-H14
MUCSR-H14-I

Code	Operation	Timer	Information
E H 00	1	X	Indoor EEPROM error
E H 0A	1	X	Indoor unit EEPROM parameter error (Hardware is OK)
E L 01	2	X	Indoor / outdoor units communication error
E L 11	2	X	Master / Slave units communication error (TWINS)
E H 12	2	X	Another unit is faulty (TWINS)
E H 02	3	X	Zero-crossing signal detection error (PG motor only)
E H 31	4	X	DC voltage is too low of indoor DC fan motor (with DC fan driver board)
E H 32	4	X	DC voltage is too high of indoor DC fan motor (with DC fan driver board)
E H 33	4	X	Over-current protection of indoor DC fan motor (with DC fan driver board)
E H 34	4	X	IPM protection of indoor DC fan motor (with DC fan driver board)
E H 35	4	X	Phase lack protection of indoor DC fan motor (with DC fan driver board)
E H 36	4	X	Current checking circuit faulty of indoor DC fan motor (with DC fan driver board)
E H 37	4	X	Zero speed protection of indoor DC fan motor (with DC fan driver board)
E H 03	4	X	Indoor fan speed is out of control
E H 3C	4	X	Fresh air motor is faulty (Domestic models)
E C 50	5	X	Temperature sensor faulty of outdoor unit (old program)
E C 51	5	X	Outdoor EEPROM error
E C 52	5	X	Condenser coil temperature sensor T3 open circuit or short circuit
E C 53	5	X	Outdoor ambient temperature sensor T4 open circuit or short circuit
E C 54	5	X	Compressor discharge temperature sensor Tp open circuit or short circuit
E C 55	5	X	IPM temperature sensor T4 open circuit or short circuit
E C 56	5	X	Evaporator outlet temperature sensor T2B (locates in outdoor unit) open circuit or short circuit (multi)
E C 57	5	X	Gas cooler temperature sensor open circuit or short cirduit (Domestic mini VRF)
E C 05	5	X	Outdoor temperature sensor fault or EEPROM fault
E C 0d	14	X	Outdoor fault (LCAC old program)
E H 60	6	X	Indoor room temperature sensor T1 open circuit or short circuit
E H 61	6	X	Evaporator coil temperature sensor T2 open circuit or short circuit
E H 66	6	X	Evaporator outlet temperature sensor T2B open cirduit or shot circuit (Domestic mini VRF)
E C 71	12	X	Over-current protection of outdoor DC fan motor
E C 75	12	X	IPM protection of outdoor DC fan motor
E C 72	12	X	Phase lack protection of outdoor DC fan motor
E C 74	12	X	Current checking circuit faulty of outdoor DC fan motor
E C 73	12	X	Zero speed protection of outdoor DC fan motor
E C 07	12	X	Outdoor DC fan speed is out of control
E H 0b	9	X	Communication error between indoor PCB and display PCB
E H b1	9	X	Communication error between display PCB and multi-function board
E H b2	9	X	Wrong wiring of 24V controller
E H b3	9	X	Communication error between indoor PCB and wired controller
E H b4	/	/	Communication error between indoor PCB and voice module
E H b5	10	X	Communication error between indoor PCB and smart eye
E H b6	/	/	Communication error between indoor PCB and camera module
E L 0C	8	X	Refrigerant leakage detection
E H 0E	/	/	Water lever alarm
E H 0F	10	X	Smart eye fault
E H 0H	/	/	RF (Radio Frequency) module fault
E H 0L	/	/	Display EEPROM fault

Continued on next page

MUNDOCLIMA®

REFERENCE : 8

ERROR CODES EN

SERIES: **COMMERCIAL H11** | **COMMERCIAL H14**

Models:

COMMERCIAL H11

MUCNR-H11
MUCNR-H11-I
MUCOR-H11
MUCOR-H11T
MUCR-H11
MUCR-H11-I
MUCSR-H11
MUCSR-H11-I
MUSTR-H11

COMMERCIAL H14

MUCNR-H14
MUCNR-H14-I
MUCR-H14
MUCR-H14-I
MUCSR-H14
MUSTR-H14
MUCSR-H14-I

Code	Operation	Timer	Information
F H 0P	/	/	WIFI module fault
F H 07	15	X	Communication error between indoor PCB and auto-lifting panel
F L 09	/	/	Wrong match with indoor and outdoor units
F H 0E	/	/	Dust sensor fault (Domestic models)
F H 0b	/	/	Electrical meter module fault (Domestic models)
F H 0d	11	X	Fresh/ionizer module fault (Domestic models)
F H 0A	7	X	Filter moving fault (models with filter auto-clean function)
F L 14	/	/	Indoor and outdoor capacity are not compatible (Domestic mini VRF)
P C 00	7	☆	Compressor IPM protection
P C 10	2	☆	Outdoor AC voltage is too low
P C 11	2	☆	Outdoor DC voltage is too high
P C 12	2	☆	Outdoor DC voltage is too low (MCE faulty of IR341 chip)
P C 01	2	☆	Outdoor AC voltage protection
P H 13	2	☆	Indoor power supply AC voltage protection (Japan models)
P C 02	3	☆	High temperature proteciton of compressor top (or IPM)
P C 40	6	☆	Communication error between outdoor chip and compressor drive chip
P C 41	5	☆	Current checking circuit faulty of inverter compressor
P C 42	5	☆	Inverter compressor start failure
P C 43	5	☆	Phase lack protection of inverter compressor
P C 44	5	☆	Zero speed protection of inverter compressor
P C 45	5	☆	Synchronization error between IR341 chip and PWM
P C 46	5	☆	Inverter compressor speed is out of control
P C 49	5	☆	Over current of inverter compressor
P C 4A	8	☆	L/N wrong wiring of outdoor unit
P C 4b	8	☆	Phase error of outdoor unit
P C 4C	8	☆	Phase lack protection of outdoor unit
P C 04	5	☆	Feedback proection of compressor
P C 06	/	/	High discharge temperature protection of compressor
P C 08	1	☆	Over current of outdoor unit
P H 09	/	/	Indoor fan stop because of anti-cold wind function
P H 0A	5	☆	Water tank proteciton (Portable)
P H A1	/	/	Water full protection (Portable)
P H 0b	/	/	Indoor grille or panel protection (Domestic units)
P C 0F	/	/	IGBT fault of PFC circuit
P C 30	7	☆	Hi pressure protection
P C 31	7	☆	Lo pressure protectoin
P C 32	7	☆	Lo pressure protectoin (Domestic mini VRF)
P C 03	7	☆	Low pressure protection
P C 0L	4	☆	Low ambient temperature protection
P H 90	/	/	Hi evaporator temperature protection in heating mode
P H 91	/	/	Lo evaporator temperature protection in cooling mode
P C 0A	/	/	Hi condenser temperature protection in cooling mode
P C A1	/	/	Sweat protection of gas cooler (Domestic mini VRF)
F H 0C	/	/	Indoor humidity sensor fault
L H 00	/	/	Frequency limitation caused by high or low evaporator temperature (L0)
L C 01	/	/	Frequency limitation caused by high condenser temperature (L1)
L C 02	/	/	Frequency limitation caused by high discharge temperature (L2)
L C 05	/	/	Frequency limitation caused by high or low voltage (L5)
L C 03	/	/	Frequency limitation caused by high current (L3)
L C 06	/	/	Frequency limitation caused by high IPM temperature or faulty PFC
L C 30	/	/	Frequency limitation caused by high pressure
L C 31	/	/	Frequency limitation caused by low pressure
L H 07	/	/	Frequency limitation caused remote controller
- - --	1	o	Mode conflict

For other errors:

The display board may show a garbled code or a code unde<00AE>ned by the service manual. Ensure that this code is not a temperature reading.

Troubleshooting:

Test the unit using the remote control. If the unit does not respond to the remote, the indoor PCB requires replacement.

If the unit responds, the display board requires replacement.

Flash frequency Display shows 88 ofrequency on Display

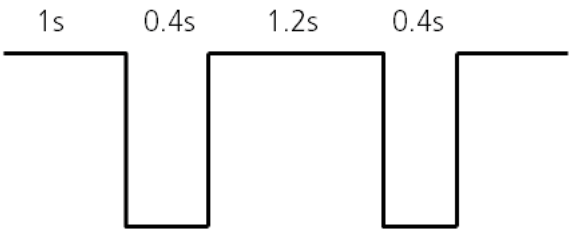

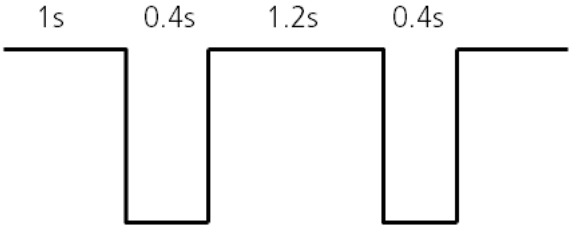

SERIES: **MUCSR-H6** **MUCSR-H8** **MUCSR-H9** **MUCNR-H9** **MUSTR-H6** **MUSTR-H8** **MUSTR-H9** **MUCR-H6** **MUCR-H8** **MUCR-H9** **MUCR-H5** **MUCOR-H8** **MUCOR-H9**

Table 1 Indoor unit error codes (display board)

Nº	Code	Led Timer	Led Run Blinking	Information
1	E0/EA	OFF	1	Indoor EEPROM error
2	E1	OFF	2	Communication malfunction beetwen indoor and outdoor units
3	E3	OFF	4	Indoor fan speed malfunction
4	E4	OFF	5	Indoor room temperature sensor (T1) open circuit or short circuit
5	E5	OFF	6	Indoor coil temperature sensor (T2) open circuit or short circuit
6	EC	OFF	7	Regfrigerante leakage detection malfunction
7	EE	OFF	8	Water-level alarm malfunction
8	E8	OFF	9	Communication malfunction beetwen two indoor units (for Twin systems)
9	E9	OFF	10	Other malfunction of Twins systems
10	Ed	OFF	11	Outdoor unit is faulty (for old comunicaction protocol)
11	F0	ON	1	Current overload protection
12	F1	ON	2	Outdoor room temperature sensor (T4) open circuit or short circuit
13	F2	ON	3	Outdoor coil temperature sensor (T3) open circuit or short circuit
14	F3	ON	4	Outdoor discharge temperature sensor (T5) open circuit or short circuit
15	F4	ON	5	Outdoor EEPROM error
16	F5	ON	6	Outdoor fan speed malfunction
17	F6	ON	7	Coil temperature sensor (T2B) open circuit or short circuit (for Multi)
18	F7	ON	8	Lifting panel comunication checking chanel is abnormal
19	F8	ON	9	Lifting panel malfunction
20	F9	ON	10	Lifting panel is not closed
21	FA	ON	11	Internal communication error in the indoor unit, (replace indoor unit board)
22	P0	FLASH	1	Inverter module IPM protection
23	P1	FLASH	2	High/Low voltage protection
24	P2	FLASH	3	High temperature protection of compressor top
25	P3	FLASH	4	Outdoor low temperature protection
26	P4	FLASH	5	Compressor drive error
27	P5	FLASH	6	Mode conflict (for some Multi models)
28	P6	FLASH	7	Low pressure protection
29	P7	FLASH	8	Sensor of outdoor IGBT is faulty
30	CP	--	--	Remote contact OFF enabled

Table 2 Wired controller error codes (KJR-120G / AU-KJR-120G)

Nº	Code	Information
1	F0	Error of communication between wire controller and indoor unit
2	F1	The lifting filter function is abnormal
3	F2	The air inlet grill doesn't fit well of Super slim four-way cassette
4	E0	Error of power supply phase sequence
5	E1	Error of communication between indoor unit and outdoor unit
6	E2	T1 temp. sensor is abnormal
7	E3	T2A temp. sensor is abnormal
8	E4	T2B temp. sensor is abnormal
9	E5	T3/T4 temp. sensor is abnormal or compressor discharge temp. sensor is abnormal
10	E6	Zero crossing detection error
11	E7	EEPROM malfunction
12	E8	Fan speed out of control
13	E9	The communication between main board and the display board is abnormal
14	EA	Compressor over current protection (four times)
15	EB	IPM malfunction
16	ED	Outdoor unit malfunction
17	EE	Water-level alarm and other malfunction
18	EF	Other malfunction

Continued on next page

SERIES: **MUCSR-H6** **MUCSR-H8** **MUCSR-H9** **MUSTR-H6** **MUSTR-H8** **MUSTR-H9** **MUCR-H6** **MUCR-H8** **MUCR-H9** **MUCR-H5** **MUCOR-H8** **MUCOR-H9**

Table 3 Outdoor unit error codes (exept 12k and 18k-H9)

Nº	Code	Information
1	E1	Communication malfunction beetwen indoor and outdoor
2	F0	Current overload protection
3	F1	Outdoor room temperature sensor (T4) open circuit or short circuit
4	F2	Outdoor coil temperature sensor (T3) open circuit or short circuit
5	F3	Outdoor discharge temperature sensor (T5) open circuit or short circuit
6	F4	Outdoor EEPROM error
7	F5	Outdoor fan speed malfunction
8	P0	Inverter module IPM protection
9	P1	High/Low voltage protection
10	P2	OLP discharge temperature switch protection (only on 48/60 models, if it appears when replacing the main board, the connector (CN3) of the OLP switch must be jumpered.
11	P3	Outdoor low temperature protection
12	P4	Rotor position protection of compres
13	P7	Sensor of outdoor IGBT is fau
14	J0	High temperature position of indoor heat exchanger in heating mode
15	J1	High temperature position of indoor heat exchanger in cooling r
16	J2	High discharge temperature protection
17	J3	PFC module protection
18	J4	Communication error between outdoor main chip and compressor driven chip IR341
19	J5	High pressure protection
20	J6	Low pressure protection
21	J8	AC voltage protection

In the low cooling mode, the LED indicator on the outdoor unit displays the code “LC” (Low Cooling) and alternates with the compressor frequency Hz (alternates every 5sec).

For more information or other codes, scan the following QR code and search for the machine model

https://mp-service.vip/tsp/errorcode/index.html#/

MUNDOCLIMA®

REFERENCE :10

ERROR CODES EN

SERIES: **MUCSR-H10A**
MUSTR-H10A
MUCR-H10A

Nº	Code	unit type	Information
1	AA	Indoor	Communication failure of wire controller
2	A1	Indoor	Indoor ambient temp sensor failure
3	A2	Indoor	Indoor coil temp sensor failure
4	A3	Indoor	Fault with the liquid pipe temperature sensor on indoor unit
5	A4	Indoor	Fault with the gas pipe temperature sensor on indoor unit
4	A5	Indoor	Drain pump failure
5	A6	Indoor	Indoor fan motor failure
6	A8	Indoor	Indoor unit EPROM failure
7	A9 / J2	Indoor / Outdoor	Communication failure between indoor unit and outdoor unit
8	E8	Indoor	Indoor high temp protection in heating
		Outdoor	Overload protection in cooling mode
9	31	Outdoor	IPM module protection (F0)
10	32	Outdoor	IPM module hardware protection
11	33	Outdoor	IPM module software protection
12	34	Outdoor	Compressor unconnected
13	35	Outdoor	Over power current protection
14	36	Outdoor	Over/low power voltage protection Over/low main line voltage protection
15	37	Outdoor	Outdoor module heat fins temp sensor failure
16	38	Outdoor	Fault with the Compressor Power supply Phase deficiency protection
17	39	Outdoor	IPM module protection
18	C1	Outdoor	Outdoor ambient temp sensor failure
19	C2	Outdoor	Outdoor coil temp sensor failure
20	C3	Outdoor	Outdoor discharge temp sensor failure
21	C6	Outdoor	Suction temp sensor failure
22	C8	Outdoor	Outdoor defrost temp sensor failure
23	E3	Outdoor	High discharge temp protection
24	FH	Outdoor	Low discharge temp protection
25	E1	Outdoor	4way-valve failure
26	H1	Outdoor	High pressure switch protection
27	H4	Outdoor	Low pressure switch protection
28	J3	Outdoor	Communication failure between PCB and IPM module
29	J7	Outdoor	Main control PCB EPROM failure
30	3H	Outdoor	Fault with the fan motor of outdoor unit
31	3J	Outdoor	Overcurrent protection of outdoor DC fan motor (Low voltage output)
32	3C	Outdoor	Overcurrent protection of outdoor DC fan motor (high speed of DC motor)
33	3E	Outdoor	Compressor drive PFC software protection
34	3F	Outdoor	Compressor drive PFC hardware protection
35	41	Outdoor	IPM protection for driving board of outdoor DC fan motor
36	99	Indoor	Communication error between the driver PCB and main PCB on the indoor unit
37	9A	Indoor	Temperature protection of indood DC fan module
38	9H	Indoor	Failure of indoor DC fan start-up
39	9C	Indoor	Overcurrent protection of inddor DC fan module
40	9J	Indoor	Overvoltage and undervoltage protection of indoor DC fan motor check ground connection
41	9E	Indoor	IPM protection for driving board of indoor DC fan motor
42	9F	Indoor	EE protection for driving board of indoor DC fan motor

SERIES: **MUCSR-H3**
MUCR-H3
MUSTR-H3

Code	Information
E1	High pressure protection
E2	Anti-frost protection
E3	Low pressure protection (refrigerant leakage) / Refrigerant collection mode
E4	Discharge high temperature protection
E6	Communication malfunction between indoor and outdoor unit
E8	Indoor unit ventilation malfunction
E9	High level of condensates malfunction in the indoor unit
F0	Indoor unit room temperature sensor malfunction (15k)
F1	Indoor unit pipe temperature sensor malfunction (20k)
F2	Outdoor unit pipe temperature sensor malfunction (20k)
F3	Outdoor unit room temperature sensor malfunction (15k)
F4	Outdoor unit discharge temperature sensor malfunction (50k)
F5	Wire control room temperature sensor malfunction
C5	Capacity setting fault (possible indoor unit PCB failure)
EE	Outdoor unit EEPROM fault
PF	Temperature sensor fault in the electrical cabinet
H3	Compressor overload protection
H4	Overload protection
H5	IPM module protection (inverter) outdoor unit
H6	Outdoor unit ventilation malfunction
H7	Outdoor unit controller desynchronization protection of IPM module (inverter)
Hc	Outdoor unit PFC module protection (only 48k model)
L1	Humidity sensor fault
Lc	Outdoor unit starting-up malfunction
Ld	Outdoor unit phase protection (anti-phase or phase missing)
LF	Power protection
Lp	Incompatibility malfunction between indoor and outdoor unit
U7	4-way valve fault (working mode opposite position)
P0	IPM module controller restart protection (inverter)
P5	Overcurrent protection
P6	Communication malfunction between main PCB and IPM module controller (inverter)
P7	IPM (inverter) or PFC module temperature sensor fault
P8	High temperature protection in IPM module (inverter) or PFC
P9	Zero crossing signal protection
PA	AC power protection (input)
PC / Pc	IPM module controller power fault (inverter)
Pd	Temperature sensor connection protection
PE	Protection for fluctuation and abrupt temperature changes
PL	Low voltage protection in bus DC
PH	High voltage protection in bus DC
PU	Power circuit fault
PP	Power supply malfunction AC
ee	Chip memory fault in IPM controller (inverter)

SERIES: **MUCH-H4**

Code	Information
E1	High pressure protection
E3	Low pressure protection
E4	Compressor discharge temp. protection
E5	Overloading protection of compressor
E6	Communication malfunction
E9	Indoor fan protection
F0	Indoor ambient temp. sensor error
F1	Indoor evaporator temp. sensor error
F2	Outdoor condensator temp. sensor error
F3	Outdoor ambient temp. sensor error
F4	Discharge temp. sensor error

SERIES: **MUCO-H6**
MUCO-H4

Code	Information
E1	High pressure protection
E2	Freeze protection
E3	Low pressure protection
E4	High discharge temperature protection of compressor
E5	Overloading protection
F1	Indoor room temperature sensor open or short circuit (RT1 indoor)
F2	Indoor pipe temperature sensor open or short circuit (RT2 indoor)
F3	Outdoor room temperature sensor open or short circuit (RT2 outdoor)
F4	Outdoor pipe temperature sensor open or short circuit (RT3 outdoor)
F5	Outdoor discharge temperature sensor open or short circuit (RT1 outdoor)

NOTE:
The unit does not have antiphase protection. So if the phase order is not correct the fans run and the compressor will make a loud noise.

SERIES: **MH-V5**
MODELS: **MH-10/20-V5**

Code	Information
F1	Room temperature sensor open or short circuit
F2	Pipe temperature sensor open or short circuit
L1	Malfunction of humidity sensor
F0	Freon-lacking protection

SERIES: **MH-V5 / MH-V9**

Models: **MH-40-V5** **MH-20/30/50-V9**

Code	Information
AS	Room temperature sensor error
ES	Temperature sensor error for evaporator
P2	Water full protection
E3	By-pass valve error when defrosting
EC	Refrigerant leak protection

SERIES: **MUPO-C4** **MUPO-12-H9**
MUPO-H4

Code	Information
E1	Room temperature sensor open or short circuit (T1)
E2	Pipe temperature sensor open or short circuit (T2)
E3	Condenser temperature sensor open or short circuit (T3)
E4	Communication malfunction for display board and PCB
P1	Water full protecction

SERIES: **MUPO-C6** **MUPO-H8**
MUPO-H6 **MUPO-C12 / H12**

Code	Information
E1	Room temperature sensor open or short circuit (TA)
E3	Pipe temperature sensor open or short circuit (TE)
No código	Condenser temperature sensor open or short circuit (TW)
E4	Fan error wall mounted (DC motor)
E8	The communication between the display board and PCB
P1	Water full protecction

SERIES: **MUPO-C7** **MUPO-C9** **MUPO-09-H9**

Code	Information
E2	Room temperature sensor open or short circuit (RT)
E1	Pipe temperature sensor open or short circuit (PT)
No código	Condenser temperature sensor open or short circuit (TW)
FL	Water full protection

SERIES: **MUPO-C10** **MUPO-09-H10** **MUPO-C15** **MUPO-H15**

Code	Information
E1	Room temperature sensor open or short circuit (RT)
E2	Pipe temperature sensor open or short circuit (PT)
E0	Communication error between main PCB and display board
Ft	Water full protecction

SERIES: **MUSER-H12**

Models: **MUSER-12-H12**

Code	Information	Code	Information
F1	Compressor IPM error	P6	Coil tube overload protection
F2	PFC/IPM error	P7	Defrost protection on coil tube
F3	Compressor start error	P8	Zero-crossing fault detection
F4	Compressor running out of step	PA	Return air sensor temperature abnormal protection
F5	Location detection loop failure	PE	Abnormal refrigerant circulation
F6	PCB communication error	PH	Exhaust temperature protection
F8	Sensor on suction pipe error	E0	Sensor on suction pipe error
FA	Phase current overcurrent protection	E1	Temperature sensor error
FL	Water-full protection	E2	Sensor error on indoor coil tube
P1	Over-heat protection on top of compressor	E3	DC fan Feedback failure
P2	Dc bus voltage Undervoltage protection	E5	Water-splash motor error
P3	AC Input voltage protection	E8	Fan feedback fault
P4	AC over-current protection	EE	EE error
P5	AC undervoltage protection		

SERIES: **MHC**

Models: **MHC-60**
MHC-96

	Information	Code
1	High pressure protection	E1
2	Low pressure protection	E2
3	Abnormal power supply voltage protection	E5
4	Electric heating overheating protection (manual reset thermostat)	E7
5	Exhaust high temp protection	E8
6	Air out high temp protection	EA
7	Environmental low temp protection	Eb
8	Controller failure	P0
9	Air inlet temperature sensor failure	P1
10	Air outlet temperature sensor failure	P2
11	Exhaust gas temp sensor failure	P3
12	Gas return temp sensor failure	P5
13	Evaporation coil temperature sensor failure	P6
14	Ambient humidity sensor failure	P7
15	Cooling plate sensor failure	P8
16	Current sensor failure	P9
17	Restart memory failure	PA
18	Compressor drive module or related wiring failure	F1
19	PFC module failure	F2
20	Compressor start failure	F3
21	Compressor running failure	F4
22	Inverter board over current protection	F5
23	Inverter board overheat protection	F6
24	Over current protection	F7
25	Radiator high temperature protection	F8
26	DC fan fault	F9
27	PFC module overcurrent protection	FA

MUNDOCLIMA®

REFERENCE :16

ERROR CODES EN

SERIES: **MUVR-C9**

Models: **MUVR-09-C9 MUVR-12-C9**

Nº	Code	Information
1	E1	High pressure protection
2	E2	Antifreezing protection
3	E3	System block or refrigerant leakage
4	E4	High discharge temperature protection of compressor
5	E5	Overcurrent protection
6	E6	Communication malfunction
7	E8	High temperature resistant protection
8	EE	EEPROM malfunction
9	EU	Limit/decrease frequency due to high temperature of module
10	C5	Malfunction protection of jumper cap
11	Fo	Gathering refrigerant
12	F1	Indoor ambient temperature sensor is open/short circuited
13	F2	Indoor evaporator temperature sensor is opne/short circuited
14	F3	Outdoor ambient temperature sensor is open/short circuited
15	F4	Outdoor condenser temperature sensor is open/short circuited
16	F5	Outdoor discharge temperature sensor is open/short circuited
17	F6	Limit/decrease frequency due to overload
18	F8	Decrease frecuency due to overcurrent
19	F9	Decrease frecuency due to high air discharge
20	FH	Limit/decrease frecuency due to antifreezing
21	PH	Voltage of DC bus-bar is too high
22	PL	Voltage of DC bus-bar is too low
23	P0	Compressor min frequence in test state
24	P1	Compressor rated frequence in test state
25	P2	Compressor maximum frequence in test state
26	P3	Compressor intermediate frequence in test state
27	P5	Overcurrent protection of phase current for compressor
28	PU	Charging malfunction of capacitor
29	P7	Malfunction of module temperature sensor circuit
30	P8	Module high temperature protection
31	HO	Reserved
32	H2	Static dedusting protection
33	H3	Overload protection for compressor
34	H4	System is abnormal
35	H5	IPM protection / Module temperature is too high
36	H6	Internal motor (fan motor) do not operate
37	H7	Desynchronizing of compressor
38	HC	PFC protection
39	L3	Outdoor DC fan motor malfunction
40	L9	Power protection
41	LP	Indoor unit and outdoor unit doesn't match
42	LC	Failure startup
43	U1	Malfunction of phase current detection circuit for compressor
44	U3	Malfunction of voltage dropping for DC bus-bar
45	U5	Malfunction of complete units current detection
46	U7	The four way-valve is abnormal (not in this unit)
47	U9	Zerocrossing malfunction of outdoor unit

SERIES: **MUVR-C6**

Code	Information
E0	Indoor EEPROM error
E1	Indoor & outdoor communicaiton error
E3	Indoor fan motor speed out of control
E4	Room temperature sensor error
E5	Evaporator temperature sensor error
EC	Refrigerant leakage detection
F0	Current overload protection
F1	Outdoor temperature sensor error
F2	Condenser temperature sensor error
F3	Exhaust temperature sensor error
F4	Outdoor EEPROM error
F5	Outdoor fan motor speed out of control
P0	IPM module error
P1	Voltage too high/too low protection
P2	Protection of IPM high temperature
P4	Protection of compressor location
P7	Outdoor IGBT sensor error

SERIES: **MUVR-H10**

Code	Information
P3	Means defrosting status. It's the normal phenomenon.
E3	Compressor stalling
E7	PFC protection
EA	Capacitor charging fault
Eb	DC line voltage drop protection
F1	Indoor ambient temp sensor short/open
F2	Outdoor ambient temp sensor short/open
F4	Outdoor mid-coil temp sensor short/open
F5	Discharge temp sensor short/open
F6	Indoor display communication between indoor and outdoor
F9	IPM protection
L1	Low voltage protection
L2	High voltage protection
L3	Demagnetization protection of compressor
L4	Compressor phase circuit detection error
P0	Compressor phase overcurrent
P1	High discharge temp protection
P2	Over-current protection
P4	Heating overload protection
P5	Anti-freeze protection
P6	Cooling overload protection
P9	IPM overheat protection

MUNDOCLIMA®

REFERENCE :18

ERROR CODES EN

SERIES:

Models:

INDOOR MVD4+
INDOOR MVD DC
INDOOR MVD DC2
INDOOR MVD AC2

INDOOR UNIT MUCHR-H6
INDOOR UNIT MUCHR-H7T
INDOOR UNIT MUCH8 / H8A
INDOOR UNIT MUCHR-HV6M
INDOOR UNIT MUCHR-HV6X

Code	LED Status (For some models)	Information
E0	DEFROST blinks fast	Mode mismatch between indoor units (cooling/heating)
E1	TIMER blinks fast	Communication malfunction between indoor and outdoor unit
E2	OPERATION (RUN) fast blink	Room temperature sensor fault (T1)
E3		Exchanger middle temperature sensor fault (T2)
E4		Exchanger outlet temperature sensor fault (T2B)
E6	TIMER blinks slow	DC Fan motor error (only units MVD DC and DC2)
E7	DEFROST blinks slow	EEPROM malfunction in the indoor PCB
E9	--	Communication error between indoor unit and wired control (Note: If E9 appears on a WDC wired controller, it may also be because the indoor unit has no address)
Eb	--	Failure of electronic expansion valve solenoid
Ed	ALARM blinks slow	Outdoor unit error
EE	ALARM blinks fast	High level of condensates on tray
A0	--	Outdoor unit emergency stop
A1	--	Refrigerant leakage error
F7	--	Repeat address error
F8	--	MS unit error
FA	--	The capacity has not been set
FE	TIMER and OPERATION (RUN) blink together	Indoor unit has not been assigned an address
H0	4 LED's blink together	Conflict or misconfigured unit
H4	--	Communication failure with display board
U4	--	MS unit check error

For more information or other codes, scan the following QR code and search for the machine model

https://mp-service.vip/tsp/errorcode/index.html#/

SERIES: **V6M-(200 to 335); MUCHR-(68 to 120)-H14E**

Models:

MVD-V6M200W/DRN1
MVD-V6M224W/DRN1
MVD-V6M260W/DRN1
MVD-V6M280W/DRN1
MVD-V6M335W/DRN1

MUCHR-68-H14T-E
MUCHR-76-H14T-E
MUCHR-96-H14T-E
MUCHR-120-H14T-E

Code	Information
H0	Communication error between main control chip and inverter driver chip
H4	Inverter module protection, P6 protection appears three times in 30 minutes
H5	P2 protection appears three times in 60 minutes
H7	Number of indoor units detected by outdoor unit not same as number set on main PCB
H8	High pressure sensor error
HF	M-Home for indoor and outdoor units do not match
E1	Phase sequence error
E2	Communication error between indoor and outdoor units
E4	Outdoor heat exchanger temperature sensor (T3) error or outdoor ambient temperature sensor (T4) error
E5	Abnormal power supply voltage
E6	DC fan motor error
Eb	E6 error appears 6 times in 1 hour
E7	Outdoor compressor discharge temperature sensor (T5) error
EH	Outdoor refrigerant cooling pipe temperature sensor (TL) error
P1	Discharge pipe high pressure protection
P2	Suction pipe low pressure protection
P3	Compressor current protection
P4	Discharge temperature protection
P5	Outdoor heat exchanger temperature protection
P8	storm protection
PL	inverter module temperature protection

Continued on next page

SERIES: **V6M-(200 to 335); MUCHR-(68 to 120)-H14E**

Models:

MVD-V6M200W/DRN1
MVD-V6M224W/DRN1
MVD-V6M260W/DRN1
MVD-V6M280W/DRN1
MVD-V6M335W/DRN1

MUCHR-68-H14T-E
MUCHR-76-H14T-E
MUCHR-96-H14T-E
MUCHR-120-H14T-E

Code	Information
L0	Inverter module protection
L1	DC bus low voltage protection
L2	DC bus high voltage Heat sink temperature sensor protection
L4	MCE error
L5	Zero speed protection
L7	Phase sequence error
L8	Compressor frequency variation greater than 15Hz within one second protection
L9	Actual compressor frequency differs from target frequency by more than 15Hz protection
F1	DC bus voltage error
bH	PED board error
bL	High pressure switch protection on compressor inverter board

SERIES: **MUCHR-H14T-E**

Models: **MUCHR-68-H14T-E**
MUCHR-76-H14T-E
MUCHR-96-H14T-E
MUCHR-120-H14T-E
MUCHR-140-H14T-E
MUCHR-150-H14T-E
MUCHR-192-H14T-E

Code	Information
A01	Emergency stop
AAx	No.x driver mismatch
xb53	No. x cooling fan error
C13	Outdoor unit address is repeated
C21	Communication error between indoor and master unit
C26	Number of indoor units detected by master unit has decreased or less than the setting amount
C28	Number of indoor units detected by master unit has decreased or less than the setting amount
xC41	Communication error between main control chip and inverter driver chip
E41	Outdoor ambient temperature sensor (T4) error (open/short)
F31	Plate heat exchanger cooling refrigerant inlet temperature sensor (T6B) error (open/short)
F41	Outdoor heat exchanger temperature sensor (T3) error (open/short)
F51	Plate heat exchanger cooling refrigerant inlet temperature sensor (T6A) error (open/short)
F62	Inverter module temperature (NTC) protection
F63	Non-inductance Resistor temperature (Tr) protection
F6A	F62 protection occurs 3 times in 100 minutes
F71	Discharge temperature sensor (T7C) error (open/short)
F72	Discharge temperature (T7C) protection
F75	Compressor discharge insufficient superheat protection
F7A	F72 protection occurs 3 times in 100 minutes
F81	Gas stop-valve temperature sensor (Tg) error (open/short)
F91	Liquid pipe temperature sensor (T5) error (open/short)

Continued on next page

SERIES: **MUCHR-H14T-E**

Models: **MUCHR-68-H14T-E**
MUCHR-76-H14T-E
MUCHR-96-H14T-E
MUCHR-120-H14T-E
MUCHR-140-H14T-E
MUCHR-150-H14T-E
MUCHR-192-H14T-E

Code	Information
FA1	Outdoor heat exchanger inlet temperature sensor (T8) error (open/short)
FC1	Outdoor heat exchanger outlet temperature sensor (TL) error (open/short)
Fd1	Compressor suction temperature sensor (T7) error (open/short)
FL1	T10 Outdoor ambient temperature sensor fault (open circuit / short circuit)
P11	High pressure sensor error
P12	Discharge pipe high pressure protection
P13	Discharge pipe high pressure switch protection
P14	P12 error occurs 3 times in 60 minutes
P21	Low pressure sensor error
P22	Suction pipe low pressure protection
P24	Suction pipe low pressure abnormal rise
P25	P22 error occurs 3 times in 100 minutes
xP32	No. (x) compressor high DC bus current protection
xP33	xP32 protection occurs 3 times in 100 minutes
P51	High AC voltage protection
P52	High AC voltage protection
P53	Power supply BN connect protection, or the phase is missing, or unbalanced when powered on
P54	DC bus low voltage protection
P55	overprotection against dc buc waviness
xP56	nº. (x) inverter module dc bus low voltage error
xP57	nº. (x) inverter module dc bus high voltage error

Continued on next page

SERIES: **MUCHR-H14T-E**

Models:
MUCHR-68-H14T-E
MUCHR-76-H14T-E
MUCHR-96-H14T-E
MUCHR-120-H14T-E
MUCHR-140-H14T-E
MUCHR-150-H14T-E
MUCHR-192-H14T-E

Code	Information
xP58	No. (x) Inverter module DC bus high voltage error
P71	EEPROM error
Pb1	Hyperlink Overcurrent Error
Pd1	Anti-condensation protection
Pd2	Pd1 protection occurs 2 times in 60 minutes
1b01	Electronic expansion valve (EEVA) error
2b01	Electronic expansion valve (EEVA) error
3b01	Electronic expansion valve (EEVC) error
4b01	Electronic expansion valve (EEVC) error
bA1	HyperLink cannot control indoor unit’s electronic expansion valve

Note: 'x' is a placeholder for the fan or compressor address, with 1 representing fan A or compressor A and 2 representing fan B or compressor B.

Continued on next page

SERIES: **MUCHR-H14T-E**

Models:
MUCHR-68-H14T-E
MUCHR-76-H14T-E
MUCHR-96-H14T-E
MUCHR-120-H14T-E
MUCHR-140-H14T-E
MUCHR-150-H14T-E
MUCHR-192-H14T-E

Code	Information
U11	Outdoor unit type setting error
U12	Capacity setting error
U21	The system contains the 1st generation indoor unit or the indoor units address are repeated
U22	Only hydraulic module available for system IDUs
U23	Common IDU and constant temperature and humidity modular AHU in the system
U24	Common IDU and reheat type fresh air modular AHU in the system
U25	Non-common IDU in the system
U26	IDU and ODU mismatch
U31	No test run or unsuccessful test run, please re-enter the test run
U32	Outdoor temperature out of operating range
U33	Indoor temperature out of operating range
U34	Outdoor and indoor temperature out of operating range
U35	Liquid side stop valve is not opened
U37	Gas side stop valve is not opened
U38	No address
U3A	The communication cable is connected incorrectly
U3b	The installation environment is abnormal
U3C	Auto mode error
U41	Common indoor unit exceeds the allowable connection range
U42	Fresh Air Processing indoor unit exceeds the allowable connection range
U43	AHU kit (discharge air temperature control) is out of the allowable connection range

Continued on next page

SERIES: **MUCHR-H14T-E**

Models: **MUCHR-68-H14T-E**
MUCHR-76-H14T-E
MUCHR-96-H14T-E
MUCHR-120-H14T-E
MUCHR-140-H14T-E
MUCHR-150-H14T-E
MUCHR-192-H14T-E

Code	Information
U44	AHU kit (return air temperature control) is out of the allowable connection range
U45	Constant temperature and humidity modular AHU (with outlet air temperature control) combination ratio out of range
U46	Reheat type fresh air modular AHU (with outlet air temperature control) combination ratio out of range
U48	The total capacity of the indoor unit is out of the allowable connection range
U54	Number of MS on heat pump ODU = 1
1L01	1L1* or 1L2* error occurs 3 times in 60 minutes
1L11	Software overcurrent
1L12	Software overcurrent protection lasting 30s
1L1E	Hardware overcurrent
1L2E	Module overtemperature protection
1L33	Bus voltage drop fault
1L43	The current sampling bias is abnormal
1L45	Motor code mismatch
1L46	IPM protection (FO)
1L47	Module type mismatch
1L4E	EEPROM error
1L51	Out-of-step error
1L52	Locked-rotor protection
1L5E	Startup failed
1L65	IPM short circuit
1L66	FCT test fault

Continued on next page

SERIES: **MUCHR-H14T-E**

Models: **MUCHR-68-H14T-E**
MUCHR-76-H14T-E
MUCHR-96-H14T-E
MUCHR-120-H14T-E
MUCHR-140-H14T-E
MUCHR-150-H14T-E
MUCHR-192-H14T-E

Code	Information
1L6E	Motor phase loss protection
1L71	U-phase upper driver open circuit
1L76	W-phase lower driver open circuit
1LB7	Other check exceptions
1LBE	High voltage switch operation
1LBF	Software certification module failure
xJ01	xJ1* or xJ2* error occurs 10 times in 60 minutes
xJ11	Software overcurrent
xJ12	Software overcurrent protection lasting 30s
xJ1E	Hardware overcurrent
xJ2E	Inverter module high temperature protection
xJ33	Bus voltage drop fault
xJ43	The current sampling bias is abnormal
xJ4E	EEPROM error
xJ51	Out-of-step error
xJ52	Locked-rotor protection
xJ5E	Startup failed
xJ6E	Motor phase loss protection
xJBJ	Software certification module failure

Note: 'x' is a placeholder for the fan address, with 1 representing fan A and 2 representing fan B

Continued on next page

SERIES: **MUCHR-H14T-E**

Models: **MUCHR-68-H14T-E**
MUCHR-76-H14T-E
MUCHR-96-H14T-E
MUCHR-120-H14T-E
MUCHR-140-H14T-E
MUCHR-150-H14T-E
MUCHR-192-H14T-E

Code	Information
d0x	Oil return running, x represents oil return operation steps
dfx	Defrost running, x represents defrosting operation steps
d11	Outdoor ambient temperature exceeds the upper limit in Heating mode
d12	Outdoor ambient temperature exceeds the upper limit in Heating mode
d13	Outdoor ambient temperature exceeds the upper limit in Cooling mode
d14	Outdoor ambient temperature exceeds the upper limit in Cooling mode
d31	Refrigerant judgment: no result
d32	Refrigerant quantity judgment: significantly excessive
d33	Refrigerant quantity judgment: slightly excessive
d34	Refrigerant quantity judgment: normal
d35	Refrigerant quantity judgment: slightly insufficient
d36	Refrigerant quantity judgment: significantly insufficient
d37	IDU connected to system is not common
d38	Too low proportion of running IDUs
d39	Failed to detect refrigerant amount during backup
d41	System exist no power indoor unit, HyperLink is controlling this indoor unit's valve
d42	Communication error between the outdoor unit and the optional board

SERIES: **MVD-V8**

Models: **MVD-(15 a 63)Q4CN18**
MVD-(71 a 180)Q4N18
MVD-(15 a 140)T2N18
MVD-(160 a 560)T1N18
MVD-(15 a 80)GN18
MVD-(22 a 88)F5N18

Code	Information
A01	Emergency stop
A11	R32 refrigerant leaks, requiring shutdown immediately
A51	ODU fault
A71	The fault of the linked FAPU is transmitted to the master IDU (series setting)
A72	El fallo de la IDU de humidificación vinculada se transmite a la IDU maestra
A73	The fault of the linked FAPU is transmitted to the master IDU (non-series setting)
A74	The fault of the AHU Kit slave unit is sent to the master unit
A81	Self-check fault
A82	MS (refrigerant flow direction switching device) fault
A91	Mode conflict
b11	1# EEV coil fault
b12	1# EEV body fault
b13	2# EEV coil fault
b14	2# EEV body fault
b34	Protection on 1# water pump
b35	Protection on 2# water pump
b36	Water level switch alarm
b71	Reheating electric heater fault
b72	Preprocessing electric heater fault
b81	Humidifier fault
C11	Duplicate indoor unit address code

Continued on next page

SERIES: **MVD V8**

Models:
MVD-(15 a 63)Q4CN18
MVD-(71 a 180)Q4N18
MVD-(15 a 140)T2N18
MVD-(160 a 560)T1N18
MVD-(15 a 80)GN18
MVD-(22 a 88)F5N18

Code	Information
C21	Abnormal communication between the indoor unit and outdoor unit
C41	Abnormal communication between the indoor unit main control board and fan drive board
C51	Abnormal communication between the indoor unit and wired controller
C52	Abnormal communication between the indoor unit and Wi-Fi Kit
C61	Abnormal communication between the indoor unit main control board and display board
C71	Abnormal communication between the AHU Kit slave unit and master unit
C72	Number of AHU Kits is not the same as the set number
C73	Abnormal communication between the linked humidifying indoor unit and master indoor unit
C74	Abnormal communication between the linked FAPU and master indoor unit (series setting)
C75	Abnormal communication between the linked FAPU and master indoor unit (non-series setting)
C76	Abnormal communication between the main wired controller and secondary wired controller
C77	Abnormal communication between the indoor unit main control board and 1# Expansion board
C78	Abnormal communication between the indoor unit main control board and 2# Expansion board
C79	Abnormal communication between the indoor unit main control board and Switch board
d16	Air inlet temperature of the indoor unit is too low in heating mode
d17	Air inlet temperature of the indoor unit is too high in cooling mode
d81	Alarm for exceeding temperature and humidity range
dE1	Sensor control board fault
dE2	PM2.5 sensor fault
dE3	CO2 sensor fault
dE4	Formaldehyde sensor fault

Continued on next page

SERIES: **MVD V8**

Models: **MVD-(15 a 63)-Q4CN18**
MVD-(71 a 180)-Q4N18
MVD-(15 a 140)-T2N18
MVD-(160 a 560)-T1N18
MVD-(15 a 80)-GN18
MVD-(22 a 88)-F5N18

Code	Information
dE5	Human Detect sensor fault
E21	T0 (fresh inlet air temperature sensor) short-circuits or cuts off
E22	The upper dry bulb temperature sensor short-circuits or cuts off
E23	The lower dry bulb temperature sensor short-circuits or cuts off
E24	T1 (Indoor unit return air temperature sensor) short-circuits or cuts off
E31	The built-in room temperature sensor of the wired controller short-circuits or cuts off
E32	The wireless temperature sensor short-circuits or cuts off
E33	The external room temperature sensor short-circuits or cuts off
E61	Tcp (pre-cooled fresh air temperature sensor) short-circuits or cuts off
E62	Tph (pre-heated fresh air temperature sensor) short-circuits or cuts off
E81	TA (outlet air temperature sensor) short-circuits or cuts off
EA1	Outlet air humidity sensor fault
EA2	Return air humidity sensor fault
EA3	Upper wet bulb sensor fault
EA4	Lower wet bulb sensor fault
EC1	R32 refrigerant leakage sensor fault
F01	T2A (heat exchanger inlet temperature sensor) short-circuits or cuts off
F11	T2 (heat exchanger middle temperature sensor) short-circuits or cuts off
F12	T2 (heat exchanger middle temperature sensor) overtemperature protection
F21	T2B (heat exchanger outlet temperature sensor) short-circuits or cuts off
P71	Main control board EEPROM fault

Continued on next page

SERIES: **MVD V8**

Models:
MVD-(15 a 63)-Q4CN18
MVD-(71 a 180)-Q4N18
MVD-(15 a 140)-T2N18
MVD-(160 a 560)-T1N18
MVD-(15 a 80)-GN18
MVD-(22 a 88)-F5N18

Code	Information
P72	Indoor unit display control board EEPROM fault
U01	Locked (electronic lock)
U11	Unit model code not set
U12	Capacity(HP) code not set
U14	Capacity(HP) code setting error
U15	AHU Kit fan control input signal DIP setting error
U38	Address code not detected
J01	Motor failed more than once
J1E	IPM (fan module) overcurrent protection
J11	Instantaneous overcurrent protection for phase current
J3E	Low bus voltage fault
J31	High bus voltage fault
J43	Phase current sample bias error
J45	Motor and indoor unit are unmatched
J47	IPM and indoor unit are unmatched
J5E	Motor startup failure
J52	Motor blocking protection
J55	Speed control mode setting error
J6E	Phase lack protection of motor

Continued on next page

SERIES: **MVD V8**

Models:
MVD-(15 a 63)-Q4CN18
MVD-(71 a 180)-Q4N18
MVD-(15 a 140)-T2N18
MVD-(160 a 560)-T1N18
MVD-(15 a 80)-GN18
MVD-(22 a 88)-F5N18

Operating status codes and definitions (no errors)

Code	Information
d0	Oil return or preheating operation
dC	Self-cleaning
dd	Mode conflict
dF	Defrosting
d51	Static pressure detection
d61	Remote shutdown
d71	Indoor unit backup operation
d72	outdoor unit backup operation
OTA	Main control program upgrading

SERIES: **OUTDOORS MINI MVD V4+ (8 -18 kW)**

Models:

MVD-V80W/DN1
MVD-V105W/DN1
MVD-V120W/DN1
MVD-V140W/DN1
MVD-V160W/DN1(B)
MVD-V120W/DRN1
MVD-V140W/DRN1
MVD-V160W/DRN1
MVD-V180W/DRN1

Code	Information	Applicable
H0	Communication malfunction between main PCB and CHIP IR341	80 ~ 105
E3		120 ~ 160
E2	Communication malfunction between indoor and out	All
E4	T3 and/or T4 sensor fault	All
E5	Voltage protection	All
E6	DC fan motor fault	All
E7	T5 discharge probe fault	80 ~ 105
E9	EEPROM fault	80 ~ 105
E0		120 ~ 160
EA	Sensor value more than 27ºC during 5 minutes in heating mode	80 ~ 105
E7		120 ~ 160
Eb	E6 fault displayed twice in 10 min	80 ~ 105
E8		120 ~ 160
P1	High pressure protection	All
P2	Low pressure protection	All
P3	Overcurrent protection	All
P4	High temperature protection in the compressor di	All
P5	High condensation temperature protection T3	All
P6	Inverter module protection	All
PE	High evaporation temperature protection T2	80 ~ 105
P7		120 ~ 160
P8	Typhoon protection	All
L0	Inverter module fault	80 ~ 105
L1	Low voltage protection DC	80 ~ 105
L2	High voltage protection DC	80 ~ 105
L4	MCE fault	80 ~ 105
L5	Zero speed protection	80 ~ 105
L7	Phases fault	80 ~ 105
L8	Frequency increased more than 15Hz in 1 s.	80 ~ 105
L9	Frequency difference between current and the main command more than 15Hz	80 ~ 105

Note: P6 code is displayed, to know the fault detail (L*) please push SW2 until last memorized fault code parameter is extracted.

Error details P6

LED1	LED2	Código Específico
8 flashes	ON	Inverter module fault
9 flashes	ON	Low voltage protection
10 flashes	ON	High voltage protection

Continued on next page

SERIES: **OUTDOORS MINI MVD V4+ (8 - 18 kW)**

Models:

MVD-V80W/DN1
MVD-V105W/DN1
MVD-V120W/DN1
MVD-V140W/DN1
MVD-V160W/DN1(B)
MVD-V120W/DRN1
MVD-V140W/DRN1
MVD-V160W/DRN1
MVD-V180W/DRN1

Code	Information	
HF	Electronic incompatibility between indoor and outdoor unit	Only 18KW
E0	EEPROM fault	12 - 16 KW
E9		Only 18KW
E2	Communication malfunction between indoor and outdoor	All
E3	Communication malfunction between main PCB and inverter	12 - 16 KW
H0		Only 18KW
E4	T3 and/or T4 sensor fault	All
E5	Voltage protection	All
E6	DC fan motor fault	All
E7	Sensor value more than 27ºC during 5 minutes in heating mode	12 - 16 KW
EA		Only 18KW
E8	E6 fault displayed twice in 10 min	12 - 16 KW
Eb		Only 18KW
P0	Reserved	- -
P1	High pressure protection	All
P2	Low pressure protection	All
P3	Overcurrent protection	All
P4	High temperature protection in the compressor discharge T5	All
P5	High condensation temperature protection T3	All
P6	Inverter module protection	All
P7	High evaporation temperature protection T2	12 - 16 KW
PE		Only 18KW
P8	Typhoon protection	All
L0	Inverter module fault	Only 18KW
L1	Low voltage protection DC	Only 18KW
L2	High voltage protection DC	Only 18KW
L3	Reserved	Only 18KW
L4	MCE fault	Only 18KW
L5	Zero speed protection	Only 18KW
L6	Reserved	- -
L7	Phases fault	Only 18KW
L8	Frequency increased more than 15Hz in 1 s.	Only 18KW
L9	Frequency difference between current and the main command more than	Only 18KW

Note: P6 code is displayed, to know the fault detail (L*) please push SW2 until last memorized fault code parameter is extracted.

Error details P6

LED1	LED2	Specific code
8 flashes	ON	Inverter module fault
9 flashes	ON	Low voltage protection
10 flashes	ON	High voltage protection

MUNDOCLIMA®

REFERENCE : 23

ERROR CODES EN

SERIES: **OUTDOORS MINI MVD V4+ (20 - 45 kW)**

Models:

MUCHR-H7T
MVD-V200W/DRN1
MVD-V224W/DRN1
MVD-V260W/DRN1
MVD-V400W/DRN1
MVD-V450W/DRN1

MUCHR-H8
UD. EXT. MUCHR-H6
UD. EXT. MUCHR-H7T
UD. EXT. MUCHR-H8

Code	Information	
E1	Phases sequence fault	All
E2	Communication malfunction between indoor and outdoor	All
E4	T3 and/or T4 sensor fault	All
E5	Voltage protection (one phase or neutral can be missing)	All
E6	DC fan motor fault	All
E7	T5 discharge probe fault	All
E8	outdoor unit address error	Todos
E9	Eeprom error	Todos
EA	Sensor value more than 27ºC during 5 minutes in heating mode	All
EB	E6 fault displayed twice in 10 min	All
H0	Communication malfunction (mismatch between main and inverter module chips)	All
H1	Communication malfunction (mismatch between main and communication chips)	All
H4	P6 fault displayed three times in 30 min	All
H5	P2 fault displayed three times in 30 min	All
H6	P4 fault displayed three times in 100 min	All
H7	Amount of indoor units decreasing	All
H8	High pressure sensor fault (pressure transducer)	All
H9	P9 fault displayed three times in 60 min	All
P0	High temperature protection in the compressor	All
P1	High pressure protection or safety discharge thermostat open	All
P2	Low pressure protection	All
P3	Overcurrent protection	All
P4	High temperature protection in the compressor discharge T5	All
P5	High condensation temperature protection T3	All
P6	Inverter module protection	All
P8	Typhoon protection	All
P9	Fan inverter module protection	All
PL	High temperature protection in module (inverter)	40 - 45 kW
C7	P6 protection displayed three times in 100 min	40 - 45 kW
L0	Inverter module fault	All
L1	Low voltage protection DC	All
L2	High voltage protection DC	All
L3	Reserved	All
L4	MCE fault / synchronization / close to circuit	All
L5	Zero speed protection	All
L6	Reserved	All
L7	Phases fault	All
L8	Frequency increased more than 15Hz in 1 s.	All
L9	Frequency difference between current and the main command more than 15Hz	All

SERIES: **OUTDOORS MINI MVD V6M (8 -16 kW)**

Models: **MVD-V6M80W/DN1**
MVD-V6M100W/DN1
MVD-V6M120W/DN1
MVD-V6M140W/DN1
MVD-V6M160W/DN1

	Information		Code
1	Module board stop abnormal	Recoverable	EE
2	Communication error between indoor and outdoor unit	Recoverable	E2
3	Outdoor heat exchanger temperature sensor (T3) erro or outdoor ambient temperature sensor (T4) error	Recoverable	E4
4	Input voltage protection	Recoverable	E5
5	DC fan protection	Recoverable	E6
6	Discharge pipe temperature sensor error	Recoverable	E7
7	EEPROM mismatch	Unrecoverable	E9
8	Compressor parameters mismatch	Unrecoverable	E.9.
9	E6 error occurs more than six times in an hour.	Unrecoverable	Eb
10	PFC error (reserved)	Recoverable	EF
11	Heat exchanger temperature sensor(reserve	Recoverable	EH
12	Cooling ambient temperature is below -5 degrees Celsius	Recoverable	EP
13	Communication fault between main board and module board	Recoverable	H0
14	M-Home mismatch(reserved)	Recoverable	HF
15	L0 error occurs three times in one hour.	Unrecoverable	H4
16	Number of indoor units decreased or increased error	Recoverable	H7
17	IPM module protection	Recoverable	L0
18	DC bus low voltage protection	Recoverable	L1
19	DC bus high voltage protection	Recoverable	L2
20	MCE error (reserved)	Recoverable	L4
21	Zero speed protection	Recoverable	L5
22	Phase sequence error	Recoverable	L7
23	Compressor over-current protection	Recoverable	LA
24	Compressor current sampling circuit fault (reserved)	Recoverable	LC
25	Compressor start-up error (reserved)	Recoverable	LH
26	Radiator surface high temperature protection	Recoverable	PL
27	System high voltage protection (reserved)	Recoverable	P1
28	System low voltage protection	Recoverable	P2
29	Over-current protection	Recoverable	P3
30	Discharge temperature (T5) protection	Recoverable	P4
31	Outdoor heat exchanger temperature(T3) protection	Recoverable	P5
32	Typhoon protection	Recoverable	P8
33	T2 indoor unit evaporator temperature protection	Recoverable	PE

1. When stand by, LED displaying the amount of indoor units online which communicate with outdoor units.
2. When operation, LED displaying frequency value of compressor.
3. When defrost, LED displaying “dF”.

Continued on next page

SERIES: **OUTDOORS MINI MVD V6M (8 -16 kW)**

Models: **MVD-V6M80W/DN1**
MVD-V6M100W/DN1
MVD-V6M120W/DN1
MVD-V6M140W/DN1
MVD-V6M160W/DN1

	Information		Code
1	Communication fault between main control board and communication terminals block	Recoverable	C0
2	IDU communication error	Recoverable	E2
3	T3 or T4 temperature sensor error	Recoverable	E4
4	Input voltage protection	Recoverable	E5
5	DC fan protection	Recoverable	E6
6	EEPROM error	Unrecoverable	E9
7	Wrong compressor parameters	Unrecoverable	E.9.
8	E6 fault occurs more than six times in an hour.	Unrecoverable	Eb
9	PFC fault	Unrecoverable	EF
10	Refrigerant radiator temperature sensor error	Recoverable	EH
11	Cooling ambient temperature lower than -5℃	Recoverable	EP
12	DC bus voltage protection	Recoverable	F1
13	Communication between the main control board and the inverter fails.	Recoverable	H0
14	M-Home mismatch(reserved	Recoverable	HF
15	L (L0/L1) fault occurs three times in one hour.	Unrecoverable	H4
16	The fault is increased or reduced on the IDU.	Recoverable	H7
17	IPM protection	Recoverable	L0
18	DC bus low voltage protection	Recoverable	L1
19	DC bus high voltage protection	Recoverable	L2
20	MCE error	Recoverable	L4
21	Zero speed protection	Recoverable	L5
22	Compressor phase sequence error	Recoverable	L7
23	Protection for compressor speed change > 15Hz	Recoverable	L8
24	Protection for the difference between the set speed and the running speed of the compressor > 15Hz	Recoverable	L9
25	Radiator surface temperature protection	Recoverable	PL
26	System high pressure protection	Recoverable	P1
27	System low pressure protection	Recoverable	P2
28	Overcurrent protection	Recoverable	P3
29	Discharge temperature T5 protection	Recoverable	P4
30	Outdoor condenser temperature T3 protection	Recoverable	P5
31	Typhoon protection	Recoverable	P8
32	IDU evaporator temperature T2 protection	Recoverable	PE

1. When stand by, LED displaying the amount of indoor units online which communicate with outdoor units.
2. When operation, LED displaying frequency value of compressor.
3. When defrost, LED displaying “dF”.

Continued on next page

MUNDOCLIMA®

REFERENCE : 24

ERROR CODES EN

SERIES: **OUTDOORS MINI MVD V6M (8 -16 kW)**

Models: **MVD-V6M80W/DN1**
MVD-V6M100W/DN1
MVD-V6M120W/DN1
MVD-V6M140W/DN1
MVD-V6M160W/DN1

	Information		Code
1	Communication error between IDU and ODU	Recoverable	E2
2	T3 or T4 temperature sensor error	Recoverable	E4
3	Input voltage protection	Recoverable	E5
4	DC fan protection	Recoverable	E6
5	EEPROM fault	Unrecoverable	E9
6	Wrong compressor parameters	Unrecoverable	E.9.
7	E6 fault occurs more than six times in an hour.	Unrecoverable	Eb
8	PFC error	Unrecoverable	EF
9	Refrigerant radiator temperature sensor error	Recoverable	EH
10	DC bus voltage protection	Recoverable	F1
11	Communication between the main control board and the inverter fails.	Recoverable	H0
12	M-Home mismatch(reserved)	Recoverable	HF
13	L (L0/L1) fault occurs three times in one hour.	Unrecoverable	H4
14	The fault is increased or reduced on the IDU.	Recoverable	H7
15	IPM protection	Recoverable	L0
16	DC bus low voltage protection	Recoverable	L1
17	DC bus high voltage protection	Recoverable	L2
18	MCE error	Recoverable	L4
19	Zero speed protection	Recoverable	L5
20	Compressor phase sequence error	Recoverable	L7
21	Protection for compressor speed change > 15Hz	Recoverable	L8
22	Protection for the difference between the set speed and the running speed of the compressor > 15Hz	Recoverable	L9
23	Radiator surface temperature protection	Recoverable	PL
24	System high pressure protection	Recoverable	P1
25	System low pressure protection	Recoverable	P2
26	Overcurrent protection	Recoverable	P3
27	T5 discharge temperature protection	Recoverable	P4
28	T3 outdoor condenser temperature protection	Recoverable	P5
29	Typhoon protection	Recoverable	P8
30	T2 IDU evaporator temperature protection	Recoverable	PE
31	Ambient temperature less than or equal to -5 ℃ in cooling mode (ODU reports the fault)	Recoverable	EP

1. When stand by, LED displaying the amount of indoor units online which communicate with outdoor units.
2. When operation, LED displaying frequency value of compressor.
3. When defrost, LED displaying “dF”.

SERIES: **OUTDOORS MINI MVD V6M (20 -33 kW)**

Models:

MVD-V6M200W/DRN1
MVD-V6M224W/DRN1
MVD-V6M260W/DRN1
MVD-V6M280W/DRN1
MVD-V6M335W/DRN1
UD. EXT. MUCHR-HV6M
MVD-V280W/DGN1
MVD-V335W/DGN1
MUCHR-HV6M

Code	Information	
H0	Communication error between main board and compressor drive board	
H4	Inverter-module protection	
H5	3 times of P2 protection in 30 minutes	Unrecoverable
H7	Qty. of indoor units mismatching	Unrecoverable
H8	High pressure sensor fault	
HF	M-HOME for the indoor and outdoor units does not match	Unrecoverable
E1	Phase sequence error	
E2	Communication error between indoor and master unit	
E4	T3 & T4 temperature sensor error	
E5	Abnormal power supply voltage	
E6	DC fan motor error	
Eb	E6 protection appears 6 times in 1 hour	Unrecoverable
E7	Discharge temperature sensor error	
EH	TL sensor error	
P1	High pressure protection	
P2	Low pressure protection	
P3	Compressor current protection	
P4	Discharge Temp. protection	
P5	High Temp. protection of condenser	
P8	Typhoon protection	
PL	Inverter module Temp. protection	
L0	Inverter compressor module error	
L1	DC bus low voltage protection	
L2	DC bus high voltage protection	
L4	MCE error	
L5	Zero speed protection	
L7	Phase sequence protection	
L8	Compressor frequency variation greater than 15Hz within one second protection	
L9	Actual compressor frequency differs from target frequency by more than 15Hz protection	
F1	DC BUS VOLTAGE ERROR	

SERIES: **MINI MVD V8M R32 (8 -16 kW)**

Models: **MVD-V8M80WDN8**
MVD-V8M100WDN8
MVD-V8M120WDN8
MVD-V8M140WDN8

Code	Information
C0	Communication error between main control board and switch module
U2	System combination fault
E2	Communication error between IDU and ODU
E4	T3 or T4 temperature sensor error
E5	Input voltage protection
E6	DC fan protection
Eb	E6 fault occurring at least 6 times in 1 hour
E9	EEPROM fault
E.9.	Wrong compressor parameters
EF	PFC feedback resistance fault
EH	Refrigerant radiator temperature sensor fault
EP	Cooling ambient temperature lower than -16°C
F1	DC bus voltage protection
H4	L (L0/L1) fault occurring 3 times in 1 hour
H7	Online IDU quantity decrease/increase
PL	Radiator surface temperature protection
P1	System high pressure protection
P2	System low pressure protection
P3	Overcurrent protection
P4	Discharge temperature T5 protection
P5	Outdoor condenser temperature T3 protection

Continued on next page

SERIES: **MINI MVD V8M R32 (8 -16 kW)**

Models: **MVD-V8M80WDN8**
MVD-V8M100WDN8
MVD-V8M120WDN8
MVD-V8M140WDN8

Code	Information
P9	4-way valve direction change fault
PE	IDU evaporator temperature T2 protection
Ph	Abnormal condensation protection
Pd	Condensation protection
L0	IPM protection
L1	DC bus low voltage protection
L2	DC bus high voltage protection
L3	Other drive faults
L4	MCE fault
L5	Zero speed protection
L7	Compressor phase sequence fault

SERIES: **OUTDOORS MINI MVD V8M R32 (25 -61,5 kW); MUCHR-HV8M**

Models:

MVD-V8M252WDRN1
MVD-V8M280WDRN1
MVD-V8M335WDRN1
MVD-V8M400WDRN1
MVD-V8M450WDRN1
MVD-V8M500WDRN1
MVD-V8M560WDRN1
MVD-V8M615WDRN1

MUCHR-40-HV8M
MUCHR-45-HV8M
MUCHR-56-HV8M

Code	Information	Manual restart needed
A01	Emergency stop	NO
xA61	Address (x) of the slave unit error	NO
AAx	No.x driver mismatch	NO
xb53	No. x cooling fan error	YES
C13	Outdoor unit address is repeated	NO
C21	Communication error between indoor and master unit	NO
C26	Number of indoor units detected by master unit has decreased or less than the setting amount	NO
C28	Number of indoor units detected by master unit has increased or more than the setting amount	NO
xC31	Communication error of address X slave outdoor unit	NO
C32	Number of slave units detected by master unit has decreased	NO
C33	Number of slave units detected by master unit has increased	NO
xC41	Communication error between main control chip and inverter driver chip	NO
E41	Outdoor ambient temperature sensor (T4) error (open/short)	NO
F31	Plate heat exchanger cooling refrigerant inlet temperature sensor (T6B) error (open/short)	NO
F41	Outdoor heat exchanger temperature sensor (T3) error (open/short)	NO
F51	Plate heat exchanger cooling refrigerant inlet temperature sensor (T6A) error (open/short)	NO
F62	Inverter module temperature (NTC) protection	NO
F63	Non-inductance Resistor temperature (Tr) protection	NO
F6A	F62 protection occurs 3 times in 100 minutes	YES
F71	Discharge temperature sensor (T7C) error (open/short)	YES
F72	Discharge temperature (T7C) protection	NO
F75	Compressor discharge insufficient superheat protection	NO
F7A	F72 protection occurs 3 times in 100 minutes	YES
F81	Gas stop-valve temperature sensor (Tg) error (open/short)	NO
F91	Liquid pipe temperature sensor (T5) error (open/short)	NO
FA1	Outdoor heat exchanger inlet temperature sensor (T8) error (open/short)	NO
FC1	Outdoor heat exchanger outlet temperature sensor (TL) error (open/short)	NO
Fd1	Compressor suction temperature sensor (T7) error (open/short)	NO
xL--	No. (x) compressor error. Refer to Table 7.5 for indications of “--”	YES
xL01	xL1* or xL2* error occurs 3 times in 60 minutes. Refer to Table 7.5 for indications of “*”	YES
xJ--	No. (x) fan motor error. Refer to Table 7.6 for indications of “--”	YES
xJ01	xJ1* or xJ2* error occurs 10 times in 60 minutes. Refer to Table 7.6 for indications of “*”	YES
P11	High pressure sensor error	NO
P12	Discharge pipe high pressure protection	NO
P13	Discharge pipe high pressure switch protection	NO
P14	P12 error occurs 3 times in 60 minutes	YES
P21	Low pressure sensor error	YES
P22	Suction pipe low pressure protection	NO
P24	Suction pipe low pressure abnormal rise	NO
P25	P22 error occurs 3 times in 100 minutes	YES

Continued on next page

SERIES: **OUTDOORS MINI MVD V8M R32 (25 -61,5 kW); MUCHR-HV8M**

Models:

MVD-V8M252WDRN1
MVD-V8M280WDRN1
MVD-V8M335WDRN1
MVD-V8M400WDRN1
MVD-V8M450WDRN1
MVD-V8M500WDRN1
MVD-V8M560WDRN1
MVD-V8M615WDRN1

MUCHR-40-HV8M
MUCHR-45-HV8M
MUCHR-56-HV8M

xP32	No. (x) Oercurrent protection on the Bus (DC)	No
xP33	xP32 occurs 3 times in 100 minutes	Yes
P51	AC high voltage protection	No
P52	AC undervoltage protection	No
P53	Power connection protection, phase and neutral are reersed	Yes
P54	DC bus undervoltage protection	No
P55	DC bus fluctuation protection	Yes
xP56	No. (x) Low voltage error on the DC bus of the Inverter module	Yes
xP57	No. (x) High voltage error on the DC Bus of the inverter module	Yes
xP58	No. (x) Excessive high voltage error on the DC Bus of the inverter module	Yes
P71	EEPROM error	Yes
Pb1	HyperLink Oercurrent Error	Yes
Pd1	Anti-condensation protection	No
Pd2	Pd1 protection occurs 2 times in 60 minutes	Yes
1b01	Electronic Expansion Valve (EEVA) Error	Yes
2b01	Electronic Expansion Valve (EEVB) Error	Yes
3b01	Electronic Expansion Valve (EEVC) Error	Yes
4b01	Electronic Expansion Valve (EEVD) Error	Yes
bA1	HyperLink cannot control the electronic expansion valve of the indoor unit	Yes

note: ‘x’ is a placeholder for the direction of the fan or compressor, where 1 represents fan ! or compressor A and 2 represents fan B or compressor B

Continued on next page

SERIES: **OUTDOORS MINI MVD V8M R32 (25 -61,5 kW); MUCHR-HV8M**

Models:

MVD-V8M252WDRN1
MVD-V8M280WDRN1
MVD-V8M335WDRN1
MVD-V8M400WDRN1
MVD-V8M450WDRN1
MVD-V8M500WDRN1
MVD-V8M560WDRN1
MVD-V8M615WDRN1

MUCHR-40-HV8M
MUCHR-45-HV8M
MUCHR-56-HV8M

Installation and debugging error code

Code	Information	Manual restart needed
U11	Outdoor unit type setting error	YES
U12	Capacity setting error	YES
U21	The system contains the 1st generation indoor unit or the indoor units address are repeated	YES
U31	No test run or unsuccessful test run, please re-enter the test run.	YES
U32	Outdoor temperature out of operating range	YES
U33	Indoor temperature out of operating range	YES
U34	Outdoor and indoor temperature out of operating range	YES
U35	Liquid side stop valve is not opened	YES
U37	Gas side stop valve is not opened	YES
U38	No address	YES
U3A	The communication cable is connected incorrectly	NO
U3b	The installation environment is abnormal	YES
U3C	Auto mode error	NO
U41	Common indoor unit exceeds the allowable connection range	YES
U42	Fresh Air Processing indoor unit exceeds the allowable connection range	YES
U43	AHU kit (discharge air temperature control) is out of the allowable connection range	YES
U44	AHU kit (return air temperature control) is out of the allowable connection range	YES
U48	The total capacity of the indoor unit is out of the allowable connection range	YES
U51	Detected more than one outdoor unit in the individual VRF system	YES
U53	outdoor units of different series detected in the same VRF system	YES

Continued on next page

SERIES: **OUTDOORS MINI MVD V8M R32 (25 -61,5 kW); MUCHR-HV8M**

Models:

MVD-V8M252WDRN1
MVD-V8M280WDRN1
MVD-V8M335WDRN1
MVD-V8M400WDRN1
MVD-V8M450WDRN1
MVD-V8M500WDRN1
MVD-V8M560WDRN1
MVD-V8M615WDRN1

MUCHR-40-HV8M
MUCHR-45-HV8M
MUCHR-56-HV8M

Compressor driver error code

Code	Information	Manual restart needed
xL1E	Hardware overcurrent	No
xL11	Software overcurrent	No
xL12	Software overcurrent protection last 30s	No
xL2E	Inverter module high temperature protection	No
xL3E	Low bus voltage error	No
xL31	High bus voltage error	No
xL32	Serious over voltage error of bus	No
xL33	Bus voltage drop fault	No
xL43	Abnormal current sampling	No
xL5E	Startup failed	No
xL52	No load protection	No
xL6E	Motor phase loss protection	No

Fan motor error code

Code	Information	Manual restart needed
xJ1E	Hardware overcurrent	No
xJ11	Software overcurrent	No
xJ12	Software overcurrent protection last 30s	No
xJ2E	Inverter module high temperature protection	No
xJ3E	Low bus voltage error	No
xJ31	High bus voltage error	No
xJ32	Serious over voltage error of bus	No
xJ43	Abnormal current sampling	No
xJ5E	Startup failed	No
xJ52	No load protection	No
xJ6E	Motor phase loss protection	No

Note: 'x' is a placeholder for the fan address, with 1 representing fan A and 2 representing fan B.

Status code

Code	Information	Manual restart needed
d0x	Oil return running， x represents oil return operation steps	No
dfx	Defrost running ， x represents defrosting operation steps	No
d11	Outdoor ambient temperature exceeds the upper limit in Heating mode	No
d12	Outdoor ambient temperature exceeds the lower limit in Heating mode	No
d13	Outdoor ambient temperature exceeds the upper limit in Cooling mode	No
d14	Outdoor ambient temperature exceeds the lower limit in Cooling mode	No
d31	Refrigerant judgment, no result	No
d32	Refrigerant quantity judgment, Significantly excessive	No
d33	Refrigerant quantity judgment, Slightly excessive	No
d34	Refrigerant quantity judgment, normal	No
d35	Refrigerant quantity judgment, Slightly insufficient	No
d36	Refrigerant quantity judgment, Significantly insufficient	No
d41	System exist no power indoor unit, HyperLink is controlling the indoor unit's valve	No

SERIES: **OUTDOORS MAXI MVD D4+ (2 WAYS)**

Models: **MVD-D252(8)W/RN1-B**
MVD-D280(10)W/RN1-B
MVD-D335(12)W/RN1-B
MVD-D400(14)W/RN1-B
MVD-D450(16)W/RN1-B

Code	Information
E0	Communication error between outdoor units
E1	Phase sequence error
E2	Communication error between indoors and the master unit.
E4	Outdoor ambient temperature sensor and condenser pipe temperature sensor error
E5	Power voltage error
E7	Discharge temp sensor malfunction T7
E8	Outdoor unit address is wrong
H0	Conflict mode error
H1	Communication error between 0537 chip and MC9S08AC128 chip
H2	Quantity of outdoor unit decreased
H3	Quantity of outdoor unit increased
H5	3 times of P2 protection in 30 minutes
H6	3 times of P4 protection in 100 minutes
H7	Quantity of indoor unit decreased
H8	High pressure sensor error
H9	3 times of P9 protection in 30 minutes
Hd	Slave units malfunction
P1	High pressure protection
P2	Low pressure protection
P3	Over current protection of digital compressor
P4	Compressor high discharge temp protection
P5	Condenser high temperature protection
P7	Over current protection of No.1 fixed compressor
P8	Over current protection of No.2 fixed compressor
P9	Fan module protection

SERIES: **OUTDOORS MAXI MVD VR4+ (3 WAYS)**

Models: **MVD-252(8)W/D2RN1T(C)**
MVD-280(10)W/D2RN1T(C)
MVD-335(12)W/D2RN1T(C)
MVD-440(14)W/D2RN1T(C)
MVD-450(16)W/D2RN1T(C)

Error code	Description	Note
E0	Communication error between outdoor units	Only display on the faulty slave unit, all the ODUs are in standby.
E1	Phase sequence error	Display on the faulty unit, all the ODUs are in standby.
E2	Communication error between indoors and the master unit.	Only display on the master unit, all the ODUs are in standby.
E4	Outdoor ambient temperature sensor (T4) and condenser pipe temperature sensor (T3/T5) error	Display on the faulty unit, all the ODUs are in standby.
E5	Power voltage error	Display on the faulty unit, all the ODUs are in standby.
E7	Discharge temp sensor error	Display on the faulty unit, all the ODUs are in standby.
E8	Outdoor unit address is wrong	Only display on the faulty slave unit, all the ODUs are in standby.
XE9	Driver model is mismatching A or B	When X is 1, it means A system; 2 means B system
H0	Communication error between main control chip and inverter driver chip	Display on the faulty unit, all the ODUs are in standby.
H1	Communication error between main control chip and communication chip	Display on the faulty unit, all the ODUs are in standby.
H2	Quantity of outdoor unit decreased	Only display on the master unit, all the ODUs are in standby.
H3	Quantity of outdoor unit increased	Only display on the master unit, all the ODUs are in standby.
H4	P6 protection appears three times in 60 minutes	Display on the faulty unit, all the ODUs are in standby. Cannot be recovered until re-power on.
H5	P2 protection appears three times in 60 minutes	Display on the faulty unit, all the ODUs are in standby. Cannot be recovered until re-power on.
H6	P4 protection appears three times in 100 minutes	Display on the faulty unit, all the ODUs are in standby. Cannot be recovered until re-power on.
H7	Quantity of indoor unit decreased	Only display on the master unit, all the ODUs are in standby.
H8	High pressure sensor error	The discharge pressure Pc≤0.3MPa(43.5PSI)
H9	P9 protection appears three times in 60 minutes	Display on the faulty unit, all the ODUs are in standby. Cannot be recovered until being power on again.
xHd	Slave units malfunction	X stands for corresponding slave unit
C7	PL protection appears three times in 100 minutes	Display on the faulty unit, all the ODUs are in standby. Cannot be recovered until re-power on.
P1	High pressure protection	Display on the faulty unit, all the ODUs are in standby.
P2	Low pressure protection	Display on the faulty unit, all the ODUs are in standby.
XP3	Over current protection of inverter compressor A or B	Display on the faulty unit, all the ODUs are in standby.
P4	Compressor discharge temp protection	Display on the faulty unit, all the ODUs are in standby.
P5	Condenser high temperature protection (T3 o T5 > 65ºC)	Display on the faulty unit, all the ODUs are in standby.
XP6	Inverter module protection A or B	When X is 1, it means A inverter module; 2 means B inverter module
P9	Fan module protection	Display on the faulty unit, all the ODUs are in standby.
PL	Temperature protection of main inverter module	
L0	Inverter module error	Display after P6 displaying for one minute
L1	DC generatrix low voltage error	Display after P6 displaying for one minute
L2	DC generatrix high voltage error	Display after P6 displaying for one minute
L3	Reserved	-
L4	MCE error/ synchronization/ closed loop	Display after P6 displaying for one minute
L5	Zero speed protection	Display after P6 displaying for one minute
L6	Reserved	-
L7	Phase sequence error	Display after P6 displaying for one minute
L8	Frequency difference in one second more than 15Hz protection	Display after P6 displaying for one minute
L9	Frequency difference between the real and the setting frequency more than 15Hz protection	Display after P6 displaying for one minute

MUNDOCLIMA®

REFERENCE : 30

ERROR CODES EN

SERIES: **OUTDOORS MAXI MVD V5X (2 WAYS)**

Models:

MUCHR-H6A
MVD-V5X252W/V2GN1
MVD-V5X280W/V2GN1
MVD-V5X335W/V2GN1
MVD-V5X400W/V2GN1
MVD-V5X450W/V2GN1
MVD-V5X500W/V2GN1

MUCHR-H8A
MVD-V5X560W/V2GN1
MVD-V5X615W/V2GN1
UD. EXT. MUCHR-H6A
UD. EXT. MUCHR-H8A

Code	Information	Notes
E0	Communication error between outdoor units	Only display on the faulty slave unit
E1	Phase sequence error	Display on the faulty unit
E2	Communication error between indoor units and the master unit.	Only display on the master unit
E3	Reserved	/
E4	Malfunction of outdoor ambient temperature sensor (T4)	Display on the faulty unit
E5	Malfunction of power supply voltage	Display on the faulty unit
E6	Reserved	/
E7	Malfunction of discharge temperature sensor	Display on the faulty unit
E8	Faulty outdoor unit address	Display on the faulty unit
xE9	Driver model is mismatched	hen x is 1, it means A system; 2 means Bsystem
xH0	Malfunction of communication between main control chip and inverter driver chip	Display on the faulty unit
H1	Malfunction of communication between main control chip a communication chip	Display on the faulty unit
H2	Outdoor unit quantity is decreased	Only display on the master unit
H3	Outdoor unit quantity is increased	Only display on the master unit
xH4	Inverter module protection	the unit with the fault is displayed, the rest on standby Rearms after a power failure.
H5	P2 protection appears three times in 60 minutes	Display on the faulty unit Cannot be recovered until re-power on
H6	P4 protection appears three times in 100 minutes	Display on the faulty unit Cannot be recovered until re-power on
H7	Faulty indoor units quantity	Display on the master unit Cannot be recovered until unit quantity recover
H8	Error del transductor de presión	The high pressure is less than 3 BAR (P<3 BAR) -
H9	The P9 protection appears three times in 60 minutes	Display on the faulty unit Cannot be recovered until re-power on
Hc	Reserved	-
F0	PP protection appears three times in 150 minutes	Display on the faulty unit Cannot be recovered until re-power on
C7	PL protection appears three times in 100 minutes	Display on the faulty unit Cannot be recovered until re-power on
yHd	Slave units malfunction	Y stands for corresponding slave unit, y=1, 2, 3.
P0	Protección por alta temperatura en la cabeza del compresor	Display on the faulty unit the rest are on standby
P1	High pressure protection	Display on the faulty unit the rest are on standby
P2	Low pressure protection	Display on the faulty unit the rest are on standby
xP3	Over current protection of compressor	Display on the faulty unit the rest are on standby
P4	Discharge temperature protection	Display on the faulty unit the rest are on standby
P5	Condenser high temperature protection T3 o T5 > 65ºC	Display on the faulty unit the rest are on standby
xP6	protection of the inverter module in system A or B	When x is 1 system A, when 2 it is system B
P9	Inverter module of fun protection	Display on the faulty unit the rest are on standby
PL	Temperature protection of inverter module	Display on the faulty unit the rest are on standby T7 > 80ºC
PP	Insufficient overheat degree protection of compressor discharge	Display on the faulty unit the rest are on standby
xL0	Inverter module error	Display after P6 displaying for one minute
xL1	DC generatrix low voltage error	Display after P6 displaying for one minute
xL2	DC generatrix high voltage error	Display after P6 displaying for one minute
xL3	Reserved	-
xL4	MCE error/ synchronization/ closed loop	Display after P6 displaying for one minute
xL5	Zero speed protection	Display after P6 displaying for one minute
xL6	Reserved	-
xL7	Phase sequence error	Display after P6 displaying for one minute
xL8	Frequency difference in one second more than 15Hz protection	Display after P6 displaying for one minute
xL9	Frequency difference between the real and the setting frequency more than 15Hz protection	Display after P6 displaying for one minute
xF1	Error on CC Bus	When voltage is out of range between 300-800V during 10 sec

SERIES: **OUTDOORS MAXI MVD V6X (2 WAYS); MUCHR-HV6X**

Models:

MVD-V6X252W/V2GN1
MVD-V6X280W/V2GN1
MVD-V6X335W/V2GN1
MVD-V6X400W/V2GN1
MVD-V6X450W/V2GN1
MVD-V6X500W/V2GN1
MVD-V6X560W/V2GN1
MVD-V6X615W/V2GN1
MVD-V6X670W/V2GN1
MVD-V6X730W/V2GN1
MVD-V6X785W/V2GN1
MVD-V6X850W/V2GN1
MVD-V6X900W/V2GN1
UE MUCHR-HV6X

Code	Information	Notes
E0	Communication error between outdoor units	Only displayed on the master unit with the error
E1	Phase sequence error	
E2	Communication error between indoor and master unit	Only displayed on the master unit with the error
E4	T3/T4 Temp. sensor error	
E5	Abnormal power supply voltage	
E6	Reserved	Reserved
E7	Discharge Temp. sensor error	
E8	Outdoor unit address error	
XE9	EEPROM mismatch of compressor	
xF1	DC bus voltage error	
F3	T6B Temp. sensor error	
F5	T6A Temp. sensor error	
F6	Electronic expansion valve connection error	
xH0	Communication error between main board and compressor drive board	
H2	Qty. of outdoor unit decreases error	Only displayed on the master unit with the error
H3	Qty. of outdoor unit increases error	Only displayed on the master unit with the error
xH4	Inverter-module protection	
H5	3 times of P2 protection in 60 minutes	
H6	3 times of P4 protection in 100 minutes	
H7	Qty. of indoor units mismatching	Only displayed on the master unit with the error
H8	High pressure sensor error	
H9	10 times of P9 protection in 120 minutes	
yHd	Slave unit malfunction(y=1,2 . e.g ,1Hd stands for slave unit 1 error)	Only displayed on the master unit with the error
C7	3 times of PL protection in 100 minutes	
P1	High pressure protection or discharge Temp. switch protection	
P2	Low pressure protection	
xP3	Compressor current protection	
P4	Discharge Temp. protection	
P5	High Temp. protection of condenser	
xP9	Fan module protection	
xPL	Inverter module Temp. protection	
PP	Compressor discharge insufficient superheat protection	
xL0	Inverter compressor module error	
xL1	DC bus low voltage protection	
xL2	DC bus high voltage protection	
xL4	MCE error	
xL5	Zero speed protection	
xL7	Phase sequence protection	
xL8	Compressor frequency variation greater than 15Hz within one second protection	
xL9	Actual compressor frequency differs from target frequency by more than 15Hz protection	

SERIES: **MAXI MVD V8X**

Models: **MVD-V8X(252 a 900)W/V2GN1**

Code	Information
A01	Emergency stop
xA61	Address (x) of the slave unit error
AAx	No.x driver mismatch,
xb53	No.(x) Heat dissipation fan error
C13	Outdoor unit address is repeated
C21	Communication error between indoor and master unit
C26	Number of indoor units detected by master unit has decreased or less than the setting amount
C28	Number of indoor units detected by master unit has increased or more than the setting amount
xC31	Communication error of address X slave outdoor unit
C32	Number of slave units detected by master unit has decreased
C33	Number of slave units detected by master unit has increased
xC41	Communication error between main control chip and No.(x) inverter driver chip
E41	Outdoor ambient temperature sensor (T4) error (open/short)
F31	Microchannel heat exchanger outlet temperature sensor(T6B) error(open/short)
F41	Main heat exchanger pipe temperature sensor (T3) error(open/short)
F51	Microchannel heat exchanger inlet temperature sensor(T6A) error(open/short)
F62	Inverter module temperature protection (NTC)
F63	Non-inductance Resistor temperature (Tr) protection
F6A	F62 protection occurs 3 times in 100 minutes
xF71	No.(x) compressor discharge temperature sensor (T7C) error (open/short)
xF72	No.(x) compressor discharge temperature (T7C) protection
F75	Compressor discharge insufficient superheat protection
F7A	F72 protection occurs 3 times in 100 minutes
F81	Gas stop-valve temperature sensor (Tg) error (open/short)
F91	Liquid pipe temperature sensor (T5) error (open/short)
FA1	Outdoor heat exchanger inlet temperature sensor (T8) error (open/short)
FC1	Outdoor heat exchanger outlet temperature sensor (TL) error (open/short)
xFd1	No.(x) Compressor suction temperature sensor (T7) error (open/short)
FL1	T10 outdoor ambient temperature sensor fault (open circuit/short circuit)
P11	High pressure sensor error
P12	Discharge pipe high pressure protection
P13	Discharge pipe high pressure switch protection

Continued on next page

SERIES: **MAXI MVD V8X**

Models: **MVD-V8X(252 a 900)W/V2GN1**

Code	Information
P14	P12 protection occurs 3 times in 60 minutes
P21	Low pressure sensor error
P22	Suction pipe low pressure protection
P24	Suction pipe low pressure abnormal rise
P25	P22 protection occurs 3 times in 60 minutes
xP32	No. (x) compressor high DC bus current protection
xP33	xP32 protection occurs 3 times in 100 minutes
P51	High AC voltage protection
P52	Low AC voltage protection
P53	Phase B and N of the power cable are connected to the opposite protection
P54	DC bus low voltage protection
P55	DC bus ripple over protection
xP56	No. (x) Inverter module DC bus low voltage error
xP57	No. (x) Inverter module DC bus high voltage error
xP58	No. (x) Inverter module DC bus excessively high voltage error
xP59	No. x inverter module bus voltage drop fault
P71	EEPROM error
Pd1	Anti-condensation protection
Pd2	Pd1 protection occurs 2 times in 60 minutes
1b01	Electronic expansion valve (EEVA) error
2b01	Electronic expansion valve (EEVB) error
3b01	Electronic expansion valve (EEVC) error
4b01	Electronic expansion valve (EEVE) error
U11	Outdoor unit type setting error
U12	Capacity setting error
U21	The system contains the 1st generation indoor unit or the indoor units address are repeated
U22	Only hydraulic module available for system IDUs
U23	Common IDU and constant temperature and humidity modular AHU in the system
U24	Common IDU and reheat type fresh air modular AHU in the system
U25	Non-common IDU in the system
U26	IDU and ODU mismatch
U31	No test run or unsuccessful test run, please re-enter the test run

Note: 'x' is a placeholder for the fan or compressor address, with 1 representing fan A or compressor A and 2 representing fan B or compressor B.

Continued on next page

SERIES: **MAXI MVD V8X**

Models: **MVD-V8X(252 a 900)W/V2GN1**

Code	Information
U32	Outdoor temperature out of operating range
U33	Indoor temperature out of operating range
U34	Outdoor and indoor temperature out of operating range
U35	Liquid side stop valve is not opened
U37	Gas side stop valve is not opened
U38	No address
U3A	The communication cable is connected incorrectly
U3b	The installation environment is abnormal
U3C	Auto mode error
U41	Common indoor unit exceeds the allowable connection range
U42	Fresh Air Processing indoor unit exceeds the allowable connection range
U43	AHU kit (discharge air temperature control) is out of the allowable connection range
U44	AHU kit (return air temperature control) is out of the allowable connection range
U45	Constant temperature and humidity modular AHU (with outlet air temperature control) combination ratio out of range
U46	Reheat type fresh air modular AHU (with outlet air temperature control) combination ratio out of range
U48	The total capacity of the indoor unit is out of the allowable connection range
U51	Detected more than one outdoor unit in the individual VRF system
U53	Detected different series outdoor units in the same VRF system
U54	Number of MS on heat pump ODU = 1
xL01	xL1* or xL2* error occurs 3 times in 60 minutes
xL11	Software overcurrent
xL12	Software overcurrent protection lasting 30s
xL1E	Hardware overcurrent
xL2E	Module overtemperature protection
xL3E	Bus low voltage error
xL31	Bus high voltage error
xL32	Serious bus overvoltage error
xL33	Bus voltage drop fault
xL43	The current sampling bias is abnormal
xL45	Motor code mismatch
xL46	IPM protection (FO)
xL47	Module type mismatch

Continued on next page

SERIES: **MAXI MVD V8X**

Models: **MVD-V8X(252 a 900)W/V2GN1**

Code	Information
xL4E	EEPROM error
xL51	Out-of-step error
xL52	Locked-rotor protection
xL5E	Startup failed
xL65	IPM short circuit
xL66	FCT test fault
xL6E	Motor phase loss protection
xL71	U-phase upper driver open circuit
xL76	W-phase lower driver open circuit
xLB7	Other check exceptions
xLBE	High voltage switch operation
xLBF	Software certification module failure
xJ01	xJ1* or xJ2* error occurs 10 times in 60 minutes
xJ11	Software overcurrent
xJ12	Software overcurrent protection lasting 30s
xJ1E	Hardware overcurrent
xJ2E	Inverter module high temperature protection
xJ3E	Bus low voltage error
xJ31	Bus high voltage error
xJ32	Serious bus overvoltage error
xJ33	Bus voltage drop fault
xJ43	The current sampling bias is abnormal
xJ4E	EEPROM error
xJ51	Out-of-step error
xJ52	Locked-rotor protection
xJ5E	Startup failed
xJ6E	Motor phase loss protection
xJbJ	Software certification module failure
d0x	Oil return running, x represents oil return operation steps
dfx	Defrost running, x represents defrosting operation steps
d11	Outdoor ambient temperature exceeds the upper limit in Heating mode
d12	Outdoor ambient temperature exceeds the lower limit in Heating mode

Note: 'x' is a placeholder for the fan address, with 1 representing fan A and 2 representing fan B.

Continued on next page

SERIES: **MAXI MVD V8X**

Models: **MVD-V8X(252 a 900)W/V2GN1**

Code	Information
d13	Outdoor ambient temperature exceeds the upper limit in Cooling mode
d14	Outdoor ambient temperature exceeds the lower limit in Cooling mode
d31	Refrigerant judgment: no result
d32	Refrigerant quantity judgment: significantly excessive
d33	Refrigerant quantity judgment: slightly excessive
d34	Refrigerant quantity judgment: normal
d35	Refrigerant quantity judgment: slightly insufficient
d36	Refrigerant quantity judgment: significantly insufficient
d37	IDU connected to system is not common
d38	Too low proportion of running IDUs
d39	Failed to detect refrigerant amount during backup
d42	Communication error between the outdoor unit and the optional board

Note: 'x' is a placeholder for the fan address, with 1 representing fan A and 2 representing fan B.

SERIES: **OUTDOORS MAXI MVD V6R (3 WAYS)**

Models: **MVD-V6R252W/V2GN1**
MVD-V6R280W/V2GN1
MVD-V6R335W/V2GN1
MVD-V6R400W/V2GN1
MVD-V6R450W/V2GN1
MVD-V6R500W/V2GN1

Code	Information	Notes
E0	Communication error between outdoor units	Only displayed on the slave unit with the error
E2	Communication error between MS and master unit	Only displayed on the the master unit
E4	T3/T4 temperature sensor error	Displayed on the unit with the error
E5	Abnormal power supply voltage	Displayed on the unit with the error
E7	Discharge temperature sensor error (T7C1)	Displayed on the unit with the error
E8	Outdoor unit address error	Displayed on the unit with the error
E9	EEPROM mismatch of compressor	Displayed on the unit with the error
F1	DC bus voltage error	Displayed on the unit with the error
F3	T6B temperature sensor error	Displayed on the unit with the error
F5	T6A temperature sensor error	Displayed on the unit with the error
zF6	Electronic expansion valve connection error	Displayed on the unit with the error
F9	T5 temperature sensor error	Displayed on the unit with the error
FA	T8 temperature sensor error	Displayed on the unit with the error
Fb	T9 temperature sensor error	Displayed on the unit with the error
Fc	TL temperature sensor error	Displayed on the unit with the error
Fd	T7 temperature sensor error	Displayed on the unit with the error
H0	Communication error between main board and compressor drive board	Solo se muestra en la ud. Maestra
H2	Qty. of outdoor unit decreases error	Only displayed on the the master unit
H3	Qty. of outdoor unit increases error	Displayed on the unit with the error
H4	Compressor inverter module protection	Displayed on the unit with the error
H5	Low pressure protection lock out (P2 3X in 60 minutes)	Displayed on the unit with the error
H6	Compressor discharge temperature protection (P4 3X in 100 minutes)	Only displayed on the the master unit
H7	Qty. of indoor units mismatching	Displayed on the unit with the error
H8	High pressure sensor error	Displayed on the unit with the error
xH9	DC fan module protection (P9 10X in 120 minutes)	Displayed on the unit with the error
Hb	Low pressure sensor error	Only displayed on the the master unit
yHd	Slave unit malfunction(y=1,2 ,1Hd stands for slave unit 1 error)	Displayed on the unit with the error
C7	Compressor inverter module temperature protection (PL 3X in 100 minutes)	Displayed on the unit with the error
P1	High pressure protection	Displayed on the unit with the error
P2	Low pressure protection	Displayed on the unit with the error
P31	Primary current protection	Displayed on the unit with the error
P32	Secondary current protection	Displayed on the unit with the error
P4	Discharge temperature protection or discharge temperature switch protection	Displayed on the unit with the error
U0	In the event of S10=ON, a forced test operation is set. However, a test operation is not performed for 30 minutes after power-on	Displayed on the unit with the error
xP9	DC fan module protection	Displayed on the unit with the error
PL	Compressor inverter module temperature protection	Displayed on the unit with the error
PP	Compressor discharge insufficient superheat protection	Displayed on the unit with the error

Continued on next page

SERIES: **OUTDOORS MAXI MVD V6R (3 WAYS)**

Models: **MVD-V6R252W/V2GN1**
MVD-V6R280W/V2GN1
MVD-V6R335W/V2GN1
MVD-V6R400W/V2GN1
MVD-V6R450W/V2GN1
MVD-V6R500W/V2GN1

Code	Information	Notes
A0	Emergency stop	Displayed on the unit with the error
A1w	Refrigerant leakage protection	Displayed on the unit with the error
CA2	The system is connected to VRF DX AHU control box only	Displayed on the unit with the error
CA3	The system is connected only to the HT hydro module	Displayed on the unit with the error
CA4	The system is only connected to VRF DX AHU control box + HT hydro module	Displayed on the unit with the error
CA5	The system is simultaneously connected to VRF indoor + VRF DX AHU control box + HT hydro module	Displayed on the unit with the error
Cb1	VRF indoor is beyond the connection range	Displayed on the unit with the error
Cb2	VRF DX AHU control box is beyond the connection range	Displayed on the unit with the error
Cb3	The HT hydro module is beyond the connection range	Displayed on the unit with the error
Cb4	The Qty. of IDUs connected to the system is beyond the connection range	Displayed on the unit with the error
L0	Inverter compressor module error	
L1	DC bus low voltage protection	
L2	DC bus high voltage protection	
L3	Reserved	
L4	MCE error	
L5	Zero speed protection	
L6	Motor parameter error	
L7	Phase sequence error	
L8	Compressor frequency hopping error	
LA	PED software verification failed	

Note:
1. 'x' is a placeholder for the fan address, with 1 representing fan A and 2 representing fan B.
2. 'y' is a placeholder for the address (1 or 2) of the slave unit with the error.
3. 'z' is a number for the electronic expansion valve, with 1 representing electronic expansion valve A and 3 representing electronic expansion valve C.
4. 'w' is a placeholder for the protection mode of refrigerant leakage, with 1 representing the system should force to shutdown after the protection, 2 representing the system should force to shutdown after the protection in 12 hours and 3 representing the system should force to shutdown after the protection in 24 hours.

For more information or other codes, scan the following QR code and search for the machine model

https://mp-service.vip/tsp/errorcode/index.html#/

SERIES: **INDOOR "HIDEN" SERIES CENTRIFUGE MVH**

Models:

MVH-H28Q4CDN1
MVH-H45Q4CDN1
MVH-H56Q4DN1
MVH-H80Q4DN1
MVH-H28T2DN1
MVH-H45T2DN1
MVH-H112Q4DN1
MVH-H140Q4DN1
MVH-H160Q4DN1
MVH-H71T2DN1
MVH-H90T2DN1
MVH-H150T2N1
MVH-H22GDN1
MVH-H36GDN1
MVH-H56GDN1

listing of error codes on display 4 LEDs

Definitions of malfunction	Contents appearing
The first time to switch on and there is no address	LED timing light and running light shine slowly at the same time.
Communication failure of indoor and outdoor unit	LED timing light shines quickly
Fault of indoor temperature sensor	LED running shines quickly
Alarming fault of water level	LED alarming light shines quickly
Mode impact fault	LED defrost light shines quickly
Outdoor unit fault	LED alarming light shines slowly
EEPROM malfunction	LED defrost light shines slowly

It shines slowly with a cycle of 2 seconds and quickly with a cycle of 0.4 second

listing of error codes on digital display

Information	Code
The first time to switch on and there is no address	FE
Errors of phase sequence or fault of losing phase	E0
Communication failure of indoor and outdoor unit	E1
T1 sensor fault	E2
T2 sensor fault	E3
T2B sensor fault	E4
Malfunction of outdoor unit	E5
Testing fault of zero-crossing signal	E6
EEPROM malfunction	E7
Wind testing fault of PG electric motor	E8
Communication fault of wire controller	E9
Alarming fault of water level switch	EE
Model conflict	EF

For more information or other codes, scan the following QR code and search for the machine model

https://mp-service.vip/tsp/errorcode/index.html#/

MUNDOCLIMA®

REFERENCE : 35

ERROR CODES EN

SERIES: **INDOOR "HIDEN" SERIES CENTRIFUGE MVH**

Models: **MVH-H100C/DN1**
MVH-H140C/DGN1
MVH-H160C/DGN1
MVH-H224C/DGN1

Code	Information	Notes
E1	Outdoor unit phase-sequence fault	
E2	Communication fault between the indoor unit and the outdoor unit	20-minute break at first or 2-minute break later
E4	T4 outdoor air temperature sensor fault	
E6	T3 Condenser pipe temperature sensor fault (outlet)	
E8	T5 Exhaust temperature sensor fault	
E9	AC over-voltage / under-voltage protection	
E10	EEPROM fault	
EA	T3B condenser temperature sensor fault (middle)	
Eb	T6 refrigerant cooling panel temperature sensor fault or temperature protection	
EC	T7 refrigerant cooling pipe inlet temperature sensor fault	
E.E	Model error(there is no dialing model in the EEOPROM)	
H0	Communication fault of master board and driver chip	
H4	Display P6(IPM module protection) for 3 times within 30 minutes	
H5	Display P2 (system pressure is too low) protection for 3 times within 30 minutes	20-minute break at first or 2-minute break later
H6	Display P4 (T5 Exhaust temperature is too high) protection for 3 times within 100 minutes	Only restore when power on again
H7	The decrease in number of indoor unit	Indoor units are lost for more than 3 minutes. It can't be restored until number of indoor units are restored.
H9	Display P9 (AC fan fault) protection for 2 times within 10 minutes	Only restore when power on again
H10	Display P3(inverter overcurrent protection) protection for 3 times within 60 minutes	Only restore when power on again
H11	Display P13 protection for 2 times within 10 minutes	Only restore when power on again
H12	There are 3 times Pb protection in 60 minutes.	/
P1	High pressure protection	
P2	Low pressure protection	Display H5 after P2 protection for 3 times within 30 minutes
P3	inverter overcurrent protection	
P4	Exhaust overheating protection	Display H6 for 3 times within 100 minutes
P5	T3 or T3B condenser pipe overheating protection	
P6	IPM protection	Display H4 after P6 protection for 3 times within 30 minutes
P9	DC fan fault	Display H9 after P9 protection for 2 times within 10 minutes
P10	Anti-typhoon protection	
P11	T2 high temperature protection when heating	
P12	T3 overheating protection	
P13	Current detection error protection	
Pb	Inverter module temperature T9 too high protection	
L0	DC compressor module fault	
L1	DC cable bus low voltage protection	
L2	DC cable bus high voltage protection	
L4	MCE fault / sync / closed loop	
L5	Zero speed protection	
L7	Compressor phase loss protection	
L8	Protection when the speed change at the previous moment and the latter moment is greater than or equal to 15HZ	
L9	Protection when the difference of set speed and actual operation speed is greater than or equal to 15HZ	

SERIES: **MINI CHILLER MUENR-H12**

Models:

MUENR-05-H12
MUENR-07-H12
MUENR-09-H12
MUENR-12-H12
MUENR-16-H12T
MUENR-14-H12
MUENR-16-H12
MUENR-12-H12T
MUENR-14-H12T

A series of error codes and corresponding meaning can be found in the table below.
Reset the unit by turning the unit ON or OFF.
If Resetting the unit is invalid, contact your local dealer.

UPPER UNIT DISPLAY No.	CODE	INFORMATION
38	PP	| Tw_out-Tw_in | abnormal protection
2	E1	Phase loss or neutral wire and live wire are connected reversely
6	E5	Air side heat exchanger temperature sensor（T3）malfunction
7	E6	The ambient temperature sensor (T4)malfunction
10	E9	Suction temperature sensor(Th) malfunction
11	EA	Discharge temperature sensor(Tp) malfunction
40	H1	Communication malfunction between main control board and inverter module
43	H4	Three times L0 protection
45	H6	The DC fan malfunction
46	H7	Voltage protection
47	H8	Pressure sensor malfunction
54	HF	Inverter module board EE prom malfunction
55	HH	10 times H6 in 2 hours
57	HP	Low pressure protection in cooling mode
20	P0	Low pressure switch protection
21	P1	High pressure switch protection
23	P3	Compressor overcurrent protection.
24	P4	Comp discharge temp. too high protection

UPPER UNIT DISPLAY No.	CODE	INFORMATION
1	E0	Water flow malfunction(after 3 times E8)
3	E2	Communication malfunction between controller and hydraulic module
4	E3	Total outlet water temp.sensor(T1) malfunction
8	E7	Buffer tank upper temp.sensor(Tbt) malfunction
9	E8	Water flow malfunction
12	Eb	Solar temp.sensor(Tsolar) malfunction
14	Ed	Inlet water temp.sensor (Tw_in) malfunction
15	EE	Hydraulic module EEprom malfunction
39	H0	Communication malfunction between main control board and hydraulic module board
41	H2	Liquid refrigerant temp.sensor(T2) malfunction
42	H3	Gas refrigerant temp.sensor(T2B) malfunction
44	H5	Room temp.sensor(Ta) malfunction
48	H9	Outlet water for zone 2 temp.sensor (Tw2) malfunction
49	HA	Outlet water temp.sensor (Tw_out) malfunction
50	Hb	Three times PP protection and Tw_out below 7 ℃
52	Hd	Communication malfunction between master unit and slave unit
25	P5	|Tw_out - Tw_in| value too big protection
31	Pb	Anti-freeze mode

Continued on next page

SERIES: **MINI CHILLER MUENR-H12**

Models:

MUENR-05-H12
MUENR-07-H12
MUENR-09-H12
MUENR-12-H12
MUENR-16-H12T
MUENR-14-H12
MUENR-16-H12
MUENR-12-H12T
MUENR-14-H12T

UPPER UNIT DISPLAY No.	CODE	INFORMATION
33	Pd	High temperature protection of air side heat exchanger temperature(T3).
65	C7	High temperature protection of inverter module
116	F1	DC bus low voltage protection
134	L0	Inverter or compressor protection
135	L1	DC bus low voltage protection
136	L2	DC bus high voltage protection
137	L3	Current sampling error of PFC circuit
138	L4	Rotating stall protection
139	L5	Zero speed protection
141	L7	Phase loss protection of compressor
121	F6	EXV1 fault
106	bA	T4 sensor out of operation range.

⚠ CAUTION

In winter, if the unit has E0 and Hb malfunction and the unit is not repaired in time, the water pump and pipeline systerm may be damaged by freezing, so E0 and Hb malfunction must be repaired in time.

SERIES: **MODULAR CHILLER MUENR-H12T**

Models: **MUENR-(75-180)-H12T**
MUENR-(75-180)-H12T(K)

No.	Code	Information	Note
1	E0	75&140 Model Main control Model setting error (Other Model Main control EPROM error)	The capability selection is inconsistent with the actual model. Power on again after setting correctly
2	E1	Phase sequence error of main control board check(for 90&180 model)	Recovered upon failure recovery
3	E2	Communication failure between master and the HMI	Recovered upon failure recovery
		Communication failure between master and slave 2E2	Recovered upon failure recovery
		Communication failure between main board and slave board	Recovered upon failure recovery
4	E3	Total water outlet temperature sensor failure (main unit valid)	Recovered upon failure recovery
5	E4	Unit water outlet temperature sensor failure	Recovered upon failure recovery
6	E5	1E5 condenser tube temperature sensor T3A failure	Recovered upon failure recovery
		2E5 condenser tube temperature sensor T3B failure	Recovered upon failure recovery
7	E6	Water tank temperature sensor T5 failure	Recovered upon failure recovery
8	E7	Ambient temperature sensor failure	Recovered upon failure recovery
9	E8	Power supply phase sequence protector output error	Recovered upon failure recovery
10	E9	Water flow detection failure	Failure locking for 3 times in 60 minutes(Recovered by power off or Wired controller clear fault)
11	Eb	1Eb-->Taf1 the pipe of the tank antifreeze protection sensor failure	Recovered upon failure recovery
		2Eb-->Taf2 cooling evaporator low-temperature antifreeze protection sensor failure	Recovered upon failure recovery
12	EC	Slave unit module reduction	Recovered upon failure recovery
13	Ed	system discharge temperature sensor failure	Recovered upon failure recovery
14	EE	1EE EVI plate heat exchanger refrigerant temperature T6A sensor failure	Recovered upon failure recovery
		2EE EVI plate heat exchanger refrigerant temperature T6B sensor failure	Recovered upon failure recovery
15	EF	Unit water return temperature sensor failure	Recovered upon failure recovery
16	EP	Discharge sensor failure alarm	Recovered upon failure recovery
17	EU	Tz sensor failure	Recovered upon failure recovery
18	P0	P0 System high-pressure protection or discharge temperature protection	for 3 times in 60 minutes (Recovered by power off)
		1P0 Compressor module 1 high pressure protection	Recovered upon failure recovery
		2P0 Compressor module 2 high pressure protection	Recovered upon failure recovery
19	P1	System low pressure protection（or Severe refrigerant leakage protection only for 75&140 model）	for 3 times in 60 minutes (Recovered by power off)
20	P2	Tz total cold outlet temperature too high(for 90&180 model)	Recovered upon failure recovery
21	P3	T4 ambient temperature too high in cooling mode	Recovered upon failure recovery
22	P4	1P4 System A current protection	for 3 times in 60 minutes
		2P4 System A DC bus current protection	(Recovered by power off)
23	P5	1P5 System B current protection	for 3 times in 60 minutes
		2P5 System B DC bus current protection	(Recovered by power off)
24	P6	Inverter module failure	Recovered upon error recovery
25	P7	High temperature protection of system condenser	for 3 times in 60 minutes (Recovered by power off)
26	P9	Water inlet and outlet temperature difference protection	Recovered upon failure recovery
27	PA	Abnormal water inlet and outlet temperature difference protection	Recovered upon failure recovery
28	Pb	Winter antifreeze protection	Reminder code, non fault or protection
29	PC	Cooling evaporator pressure too low	Recovered upon error recovery for 3 times in 60 minutes(Recovered by power off)
30	PE	Cooling evaporator low temperature antifreeze protection	Recovered upon error recovery for 3 times in 60 minutes(Recovered by power off)
31	PH	Heating T4 too high temperature protection	Recovered upon error recovery
32	PL	Tfin module temperature too high protection	for 3 times in 100 minutes(Recovered by power off)
33	PU	1PU DC fan A module protection	Recovered upon failure recovery
		2PU DC fan B module protection	Recovered upon failure recovery
34	bH	1bH:Module 1 relay blocking or 908 chip self-check failed	Recovered upon error recovery
		1bH:Module 2 relay blocking or 908 chip self-check failed	Recovered upon error recovery
35	H5	Voltage too high or too low	Recovered upon error recovery
36	xH9	1H9 Compressor A inverter module is not matched	Recovered upon error recovery
		2H9 Compressor B inverter module is not matched	Recovered upon error recovery
37	HC	High pressure sensor failure(for 75&140 model)	Recovered upon error recovery
38	HE	1HE No inset A valve error	Recovered upon error recovery
		2HE No inset B valve error	Recovered upon error recovery
		3HE No inset C valve error	Recovered upon error recovery
39	F0	1F0 IPM module A transmission error	Recovered upon error recovery
		2F0 IPM module B transmission error	Recovered upon error recovery
40	F2	Superheat insufficient	Wait at least 20min before recovering

Continued on next page

SERIES: **MODULAR CHILLER MUENR-H12T**

Models: **MUENR-(75-180)-H12T**
MUENR-(75-180)-H12T(K)

No.	Code	Information	Note
41	F4	1F4 module A L0 or L1 protection occursfor 3 times in 60 minutes	Recovered by power off
		2F4 module B L0 or L1 protection occursfor 3 times in 60 minutes	Recovered by power off
42	F6	1F6 A system bus voltage error (PTC)	Recovered upon error recovery
		2F6 B system bus voltage error (PTC)	Recovered upon error recovery
43	Fb	Low pressure sensor error(pressure sensor error for 90&180 model)	Recovered upon error recovery
44	Fd	Suction temperatrue sensor error	Recovered upon error recovery
45	FF	1FF DC fan A error	Recovered by power off
		2FF DC fan B error	Recovered by power off
46	FP	DIP switch inconsistency of multiple water pumps	Recovered by power off
47	C7	If PL occurs 3 times in 100 minutes,the system reports the C7 failure	Recovered by power off or Wired controller clear fault
48	xL0	Compressor inverter module protection(x=1or 2,1 for Compressor A,2 for Compressor B)	Recovered upon error recovery
49	xL1	low-voltage protection(x=1or 2,1 for Compressor A,2 for Compressor B)	Recovered upon error recovery
50	xL2	high-voltage protection(x=1or 2,1 for Compressor A,2 for Compressor B)	Recovered upon error recovery
51	xL4	MCE error(x=1or 2,1 for Compressor A,2 for Compressor B)	Recovered upon error recovery
52	xL5	zero-speed protection(x=1or 2,1 for Compressor A,2 for Compressor B)	Recovered upon error recovery
53	xL7	phase loss(x=1or 2,1 for Compressor A,2 for Compressor B)	Recovered upon error recovery
54	xL8	frequency change over 15Hz(x=1or 2,1 for Compressor A,2 for Compressor B)	
55	xL9	frequency phase difference 15Hz(x=1or 2,1 for Compressor A,2 for Compressor B)	Recovered upon error recovery
56	dF	Defrosting prompt	Flash when entering the defrosting
57	L10	Overcurrent protection	Overcurrent fault(Only for 75&140 Model)
	L11	Transient phase current overcurrent protection	
	L12	Phase current overcurrent lasts 30s protection	
58	L20	Module over temperature protection	Over temperature fault(Only for 75&140 Model)
59	L30	Low bus voltage error	Power fault(Only for 75&140 Model)
	L31	High bus voltage error	
	L32	Excessively high bus voltage error	
	L34	Phase loss error	
60	L43	Phase current sampling bias abnormal	hardware fault(Only for 75&140 Model)
	L45	Motor code not match	
	L46	IPM protection	
	L47	Module type not match	
61	L50	Startup failure	Control fault(Only for 75&140 Model)
	L51	Out of step error	
	L52	Zero speed error	
62	L60	Fan motor phase loss protection	Diagnostic fault(Only for 75&140 Model)
	L65	IPM short circuit error	
	L66	FCT detection error	
	L6A	Open circuit of U-phase upper tube	
	L6B	Open circuit of U-phase lower tube	
	L6C	Open circuit of V-phase upper tube	
	L6D	Open circuit of V-phase lower tube	
	L6E	Open circuit of W-phase upper tube	
	L6F	Open circuit of W-phase lower tube	

MUNDOCLIMA®

REFERENCE : 38

ERROR CODES EN

SERIES: **MUENR-H4; MUENR-H6; MUENR-H6T**

Models:

MUENR-05-H4
MUENR-07-H4
MUENR-10-H4
MUENR-12-H4
MUENR-14-H4
MUENR-16-H4

MUENR-05-H6
MUENR-07-H6
MUENR-10-H6
MUENR-12-H6
MUENR-12-H6T
MUENR-14-H6T
MUENR-16-H6T

Code	Information
E9	EEPROM malfunction
H0	Communication malfunction between main chip and IPDU.
E4	T3,T4 sensor malfunction
E5	Voltage protection malfunction
E6	DC fan motor malfunction
EA	A fan in the A region run for more than 5 minutes in heating mode
Eb	There are two times E6 fault in 10 minutes (recovery after power off)
HH	Inlet water temperature sensor malfunction for 5/7kW models.
CE	Outlet water temperature sensor malfunction (5/7kW) 5/7kW
C0	Temperature sensor malfunction of plate heat exchanger for 5/7kW.
P1	High pressure protection
P2	Low pressure protection
P3	Current protection of the compressor
P4	Discharged temperature protection
P5	T3 high temperature protection of outdoor condenser
P6	IPDU module protection
P8	Typhoon protection
CH	Protection when temperature difference between inlet & outlet water in heating mode is too large for 5/7kW
CL	Protection when temperature difference between inlet & outlet water in cooling mode is too large for 5/7kW.
CP	Anti-freeze protection of plate heat exchanger for 5/7kW
Pb	System anti-freeze protection The same
C8	Water flow switch protection malfunction as 10-16kW
PH	Protection when water temperature in heating mode is too high for 5/7kW. 5/7kW
dF	Defrosting
d8	Remote contact ON / OFF is active

Wired controller error code list KJR-120F1/BMK-E (CL92340):

EE	EEPROM error code(Wire controller)	C0	Tin temperature sensor malfunction
E9	EEPROM malfunction	C1	Tout temperature sensor malfunction
EA	5-minute error for heating mode fan in area A	C8	Flow switch malfunction
Eb	Two times of E6 protection in 10 minutes	CH	High temperature protection in heating mode
E4	T3&T4 temperature sensor malfunction	CL	Low temperature protection in heating mode
E5	Voltage protection	CP	Anti-idling protection of water pump
E6	DC fan motor malfunction	F7	Tb1 temperature sensor malfunction
H0	Communication malfunction between the main controlling chip and IPDU	F8	Tb2 temperature sensor malfunction

P1	High pressure protection	Pb	Outdoor units anti-freezing protection
P2	Low pressure protection	PL	Radiator high temperature protection
P3	Outdoor units current protection	PH	Water inlet and outlet temp. difference too large protection
P4	Compressor discharge temp. Protection	E2	Communication error beetwen the wired controller and the chiller unit.
P5	Condenser high temperature protection		
P6	IPM mode protection		
P8	Typhoon protection		

SERIES: **MUEN-HG; MUEN-H6**

Models: **MUEN-05-HG** **MUEN-10-HG** **MUEN-15-HG** **MUEN-30-H6T** **MUEN-65-H6T**

Code	Information
STY	Remote switch in Standby position (automatic reset)
Er01	High pressure protection (manual reset)
Er05	Low pressure protection
Er41	3-phase sequence, current and over-heat condenser temperature protection (manual reset)
Er30	Frost prevention alarm (manual reset)
Er61	Water outlet sensor T02 malfunction (automatic reset)
Er62	Coil sensor T03 malfunction (automatic reset)
Er60	Water return sensor T01 malfunction (automatic reset)
Er20	Water flow protection
Er47	Remote keyboard communication error
Er45/Er46	Error clock faulty / Error set clock
Er90	Alarm history records exceeded 99 times (manual reset)

Continued on next page

SERIES: **MUEN-HG; MUEN-H6**

Models: **MUEN-05-HG** **MUEN-10-HG** **MUEN-15-HG** **MUEN-30-H6T** **MUEN-65-H6T**

	Code	Information
1	E0	Water flow detection error (The third time)
2	E1	Power phase sequence error
3	E2	Communication error
4	E3	Total water outlet temperature sensor error
5	E4	Outlet water temperature sensor error in shell and tube exchanger
6	E5	Pipe temperature sensor error in condenser A
7	E6	Pipe temperature sensor error in condenser B
8	E7	Outdoor ambient temperature sensor error
9	E8	Air discharge temperature sensor error in digital compressor in system A
10	E9	Water flow detection error (The first and second times)
11	EA	Main unit detected that auxiliary unit's quantity have decreassed
12	EB	Anti-freezing temperature sensor 1 error in shell and tube exchanger
13	EC	Wired controller did not find out any on-line module unit
14	ED	Wired controller and module unit communication error
15	Ed	1-hour consecutive 4-times PE protection
16	EE	Wired controller and computer communication error
17	EF	Inlet water temperature sensor error
18	P0	High pressure or air discharge temperature protection in system A
19	P1	Low pressure protection in system A
20	P2	High pressure or air discharge temperature protection in system B
21	P3	Low pressure protection in system B
22	P4	Current protection in system A
23	P5	Current protection in system B
24	P6	Condenser high pressure protection in system A
25	P7	Condenser high pressure protection in system B
26	P8	Air discharge temperature sensor protection in digital compressor in system A
27	Pb	System anti-freezing protection
28	PE	Low-temperature protection of double-pipe heat exchanger
29	F1	EEPROM failure
30	F2	Failure of reduction of wired controller number at parallel connection of multiple wired controller (reserved)

Continued on next page

SERIES: **MUEN-HG; MUEN-H6**

Models: **MUEN-05-HG** **MUEN-10-HG** **MUEN-15-HG** **MUEN-30-H6T** **MUEN-65-H6T**

	Code	Information
1	E0	EEPROM error
2	E1	Power phase sequence error
3	E2	Communication error
4	E3	Total water outlet temperature sensor error
5	E4	Outlet water temperature sensor error in heat exchanger
6	E5	Pipe temperature sensor error in condenser A
7	E6	Pipe temperature sensor error in condenser B
8	E7	Outdoor ambient temperature sensor error or power supply protection
9	E8	Output error of the power protector
10	E9	Water flow detection error
11	EA	(Reserved failure code)
12	Eb	Anti-freezing temperature sensor 1 error in shell and tube exchanger
13	EC	Wired controller detected that the units on-line have decreased.
14	Ed	(Reserved failure code)
15	EF	Inlet water temperature sensor error
16	P0	High pressure or air discharge temperature protection in system A
17	P1	Low pressure protection in system A
18	P2	High pressure or air discharge temperature protection in system B
19	P3	Low pressure protection in system B
20	P4	Current protection in system A
21	P5	Current protection in system B
22	P6	Condenser high pressure protection in system A
23	P7	Condenser high pressure protection in system B
24	P8	(Reserved failure code)
25	P9	Outlet and inlet water temperature difference protection
26	PA	Low ambient temperature drive-up protection
27	Pb	System anti-freezing protection
28	Pc	Anti-freezing pressure protection in system A
29	Pd	Anti-freezing pressure protection in system B
30	PE	Low-temperature protection of shell and tube heat exchanger

MUNDOCLIMA®

REFERENCE : 40

ERROR CODES EN

SERIES: **MUENR-H7T**

Models: **MUENR-30-H7T**
MUENR-30-H7T(K)
MUENR-60-H7T
MUENR-60-H7T(K)
MUENR-30-H7T(K2)

Nº	Code	Information
1	1E0	EEPROM error of main control board
	2E0	EEPROM error of inverter module A
	3E0	EEPROM error of inverter module B
2	E1	Power phase sequence error
3	E2	Comunicaction error between main control board and wired controller
4	E3	Total water outlet temperature sensor (Tw) error (Master only)
5	E4	Water outlet temperature sensor (Two) error
6	E5	Condenser tube temperature sensor (T3) error
7	E7	Outdor ambient temperature sensor (T4) error
8	E9	Water flow detection error (protection occurs for 3 times in 60 minutes and the failure can be recovered by power disconnection only)
9	1Eb	Evaporator anti-freezing temperature sensor (Taf1) error
	2Eb	Evaporator anti-freezing temperature sensor (Taf2) error
10	EC	Wired controller detected that the units on-line reduction
11	1Ed	Compressor discharge temperature sensor (TP1) error
	2Ed	Compressor discharge temperature sensor (TP2) error
12	EF	Inlet water temperature sensor (Twi) error
13	EH	System self-check error alarm
14	EP	Compressor discharge temperature sensor error alarm
15	EU	Total cooling outlet tmperature sensor (Tz/7) error
16	P0	High pressure (>44Bar) or compressor discharge temperature (>110ºC) protection (protection occurs for 5 times in 120 minutes and the failure can be recovered by power disconnection only)
17	P1	Low pressure (<1.4Bar) protection (protection occurs for 5 times in 120 minutes and the failure can be recovered by power disconnection only)
18	P4	System A current (≥25A) protection (protection occurs for 5 times in 120 minutes and the failure can be recovered by power disconnection only)
19	P5	System B current (≥25A) protection (protection occurs for 5 times in 120 minutes and the failure can be recovered by power disconnection only)

Nº	Code	Information
20	1P6	System A inverter module protection
	2P6	System B inverter module protection
21	P7	Condenser tube (T3>65ºC) and Total cooling outlet (Tz/7>62ºC) high temperature protection
22	P9	Protection of outlet and inlet water temperature (≥12ºC) difference protection (protection occurs for 3 times in 60 minutes and the failure can be recovered by power disconnection only)
23	PA	Inlet water high temperature in cooling mode
24	Pb	System anti-freezing protection (≤4ºC in normal water outlet mode and ≤0ºC in low water outlet mode)
25	PC	Evaporator pressure low in cooling mode
26	PE	Low temperature (≤3ºC in normal water outlet mode and ≤0ºC in low water outlet mode) protection evaporator (manual recovery)
27	PH	Ambient temperature (T4) high temperature protection in heating mode
28	PL	Module high temperature (Tf1 or Tf2>82ºC) protection (protection occurs for 3 times in 100 minutes and the failure can be recovered by power disconnection only)
29	1PU	DC fan1 module protection
	2PU	DC fan2 module protection
30	1H0	System A IPM module communication error
	2H0	System B IPM module communication error
31	H1	Under/Over voltage (V≥260V or V<165V) protection
32	1H4	Three times 1PP protection whithin one hour (power off recovery)
	2H4	Three times 2PP protection whithin one hour (power off recovery)
33	1H6	System 1 DC buc voltage error
	2H6	System 2 DC buc voltage error
34	Fb	Pressure sensor error
35	Fd	Gas suction temperature (Th) protection error
36	1FF	DC fan 1 error
	2FF	DC fan 2 error
37	FP	DIP inconsistency of multiple water pumps (Power failure recovery requiered)
38	L0	Inverter module protection
39	L1	DC bus low voltage protection
40	L2	DC bus high voltage protection
41	L4	MCE error
42	L5	Zero speed protection
43	L7	Phase sequence error
44	L8	Compressor frecuency variation greater than 15Hz
45	L9	Actual compressor frecuency differes from target frecuency by more than 15Hz protection
46	dF	Defrosting prompt

SERIES: **MUENR-H9T**

Models: **MUENR-30-H9T**
MUENR-30-H9T(K)
MUENR-60-H9T
MUENR-60-H9T(K)

NO.	Code	Content	Note
1	E0	Main control parameter memory EPROM failure	Recovered upon failure recovery
2	E1	Phase sequence failure of main control board check	Recovered upon failure recovery
3	E2	Communication failure between master and the control panel (HMI)	Recovered upon failure recovery
		Communication failure between master and slave	Recovered upon failure recovery
4	E3	Total water outlet temperature sensor failure (Tw) (main unit only)	Recovered upon failure recovery
5	E4	Unit water outlet temperature sensor failure (Two)	Recovered upon failure recovery
6	E5	1E5 condenser tube temperature sensor T3A failure	Recovered upon failure recovery
		2E5 condenser tube temperature sensor T3B failure	Recovered upon failure recovery
8	E7	Ambient temperature sensor failure (T4)	Recovered upon failure rcovery
9	E8	Power supply phase sequence protector output error	Recovered upon failure recovery
10	E9	Water flow detection failure	If there is a failure recovery, the number of previous protections will be cleared
12	Eb	1Eb-->Taf1 cooling evaporator low-temperature antifreeze protection sensor failure (Taf1)	Recovered upon error recovery
		2Eb-->Taf2 cooling evaporator low-temperature antifreeze protection sensor failure (Taf2)	Recovered upon error recovery
13	EC	Slave unit module reduction	Recovered upon error recovery
14	Ed	1Ed-->A system discharge temperature sensor failure (Tp1)	Recovered upon error recovery
		2Ed-->B system discharge temperature sensor failure (Tp2)	Recovered upon error recovery
16	EF	Unit water return temperature sensor failure (Twi)	Recovered upon error recovery
17	EH	System self-check failure alarm	Recovered upon error recovery
19	EP	Discharge temperature sensor failure alarm (Tp)	Recovered upon error recovery
20	EU	Coil final outlet temperature sensor error (Tz/7)	Recovered upon error recovery
21	P0	System high-pressure protection or discharge temperature protection	Occurs 3 times in 60 minutes and the error can be recovered by turning off the power supply only
22	P1	System low pressure protection	Occurs 3 times in 60 minutes and the error can be recovered by turning off the power supply only
23	P2	Coil final outlet temperature too high (Tz/7)	Recovered upon error recovery
24	P3	Ambient temperature too high in cooling mode (T4)	Recovered upon error recovery
25	P4	System A current protection	Occurs 3 times in 60 minutes and the error can be recovered by turning off the power supply only
26	P5	System B current protection	Occurs 3 times in 60 minutes and the error can be recovered by turning off the power supply only
27	P6	Inverter module failure	Recovered upon error recovery
28	P7	High temperature protection of system condenser	Occurs 3 times in 60 minutes and the error can be recovered by turning off the power supply only
30	P9	Water inlet and outlet temperature difference protection	Recovered upon error recovery
32	Pb	Antifreeze protection in winter	Recovered upon error recovery
33	PC	Evaporator pressure too low in cooling	Recovered upon error recovery
35	PE	Cooling evaporator low temperature antifreeze protection	Recovered upon error recovery
37	PH	Ambient temperature too high in heatling mode (T4)	Recovered upon error recovery

Continued on next page

SERIES: **MUENR-H9T**

Models: **MUENR-30-H9T**
MUENR-30-H9T(K)
MUENR-60-H9T
MUENR-60-H9T(K)

No.	Code	Content	Note
38	PL	Inverter module temperature too high temperature protection (Tf1 / Tf2)	Occurs 3 times in 100 minutes and the error can be recovered by turning off the power supply only
40	xPU	DC fan module protection	x=1 means Fan A,x=2 means Fan B Recovered upon error recovery
46	H5	Voltage too high or too low	Recovered by power off
50	xH9	Compressor inverter module is not matched	x=1 means compressor A, x=2 means compressor B
55	xHE	Not insert electronic expansion valve error	x=1 means valve A, x=2 means valve B
61	xF0	IPM module communication failure	x=1 means system A, x=2 means system B
63	F2	Superheat insufficient	Occurs 3 times in 240 minutes and the error can be recovered by turning off the power supply only
65	xF4	L0 or L1 protection occurs 3 times in 60 minutes	x=1 means system A, x=2 means system B
67	xF6	DC bus voltage error (PTC)	x=1 means system A, x=2 means system B
68	F7	Not insert electronic expansion valve	Recovered by power off
70	xF9	Inverter module temperature sensor error	x=1 means Tfin1, x=2 means Tfin2
72	Fb	Pressure sensor error	Recovered upon error recovery
74	Fd	Suction temperatrue sensor error	Recovered upon error recovery
76	xFF	DC fan failure	x=1 means fan A, x=2 means fan B
79	FP	DIP inconsistency of multiple water pumps	Recovered by power off
88	C7	If PL occurs 3 times,the system reports the C7 failure	Recovered by power off
101	L0	Compressor inverter module protection	Recovered upon error recovery
102	L1	DC bus low voltage protection	Recovered upon error recovery
103	L2	DC bus high voltage protection	Recovered upon error recovery
105	L4	MCE error	Recovered upon error recovery
106	L5	Zero speed protection	Recovered upon error recovery
108	L7	Phase sequence lost protection	Recovered upon error recovery
109	L8	Compressor frequency change over 15Hz	Recovered upon error recovery
110	L9	Compressor frequency difference 15Hz	Recovered upon error recovery
146	dF	Defrosting prompt	Flash when entering the defrosting

SERIES: **MUP-W9**
MUP-W7

Code	Information
EE	Water level alarm malfunction
E3	T2 evaporator sensor malfunction
E2	T1 ambient sensor malfunction
E8	DC motor malfunction
E7	EEPROM error

SERIES: **MUP-WF**

Code	Information
E0	Water pump error
E6	Communication error
E9	Water overflow protection
F0	Error of indoor ambient temperature sensor of return air inlet
F1	Temperature sensor error of evaporator
F5	Temperature sensor error of wired controller
EH	Auxiliary electrical heater error
C5	Jumper error
H6	PG motor error

SERIES: **MUCS-W9**
MUCS-W7

NO.	Information	Operation	Timer	Defrost	Alarm	Code
1	Room temperature sensor checking channel is abnormal	×	☆	×	×	E2
2	Evaporator sensor checking channel is abnormal	☆	×	×	×	E3
3	EEPROM malfunction	☆	☆	×	×	E7
4	Water-level switch malfunction	×	×	×	☆	EE
5	Fan Failure	☆	×	☆	×	E8
6	Not set models	×	×	☆	☆	PH

（× Extinguish , ☆ Flash at 5Hz ）

SERIES: **MUCSW-HG**

Code	Red LED (Heat)	Green LED (Cool)	Information
	Blink 2 Times	OFF	Unit 2 failure (Slave)
	Blink 3 Times	OFF	Unit 3 failure (Slave)
	Blink 4 Times	OFF	Unit 4 failure (Slave)
	Blink "n" Times	Blink 2 Times	Unit "n" failure (Slave)
E3	OFF	Blink 3 Times	Indoor room temperature sensor error
E4	OFF	Blink 4 Times	Indoor pipe temperature sensor error
E5	OFF	Blink 5 Times	Indoor coil oil low temperature protection
E6	OFF	Blink 6 Times	Indoor coil oil over temperature protection
E7	OFF	Blink 7 Times	Waster pump failure

SERIES: **MUCM-W9, MUCM-W15**

Models:

MUCM-09-W9	**MUCM-09-W15**
MUCM-12-W9	**MUCM-12-W15**
MUCM-15-W9	**MUCM-15-W15**
MUCM-19-W9	**MUCM-19-W15**
MUCM-27-W9	**MUCM-27-W15**
MUCM-30-W9	**MUCM-30-W15**
MUCM-36-W9	**MUCM-36-W15**

	Fault definition	Applicable models	Classification Sub fault	New fault code (V11 version)	Subcode (V11)	Failure class (L1>L2>L3)
1	Fan failure	Protection fault	JO	1	Several times motor failures within 60 minutes	L1
2	Fan failure	Forced shutdown failure	Jy	Z	One time motor failure	L2
3	Fan failure	Forced shutdown failure	J4	5	Motor mismatch	L2
4	Water level fault (reserved)	Forced shutdown failure	b3	4	Water pump 1 body failure	L2
5	Water level fault (reserved)	Forced shutdown failure	b3	5	Water pump 2 body failure	L2
6	Water level fault	Forced shutdown failure	b3	6	Water level switch alarm failure	L2
7	EEPROM failure	Electrical control protection fault	P7	1	EEPROM failure	L2
8	EEPROM failure (reserved)	Electrical control protection fault	P7	2	Panel E side failure	L2
9	Air intake sensor failure	Sensor failure	E2	4	T1 sensor failure	L2
10	T2A sensor failure	Sensor failure	F0	1	T2A sensor failure	L3
11	T2B sensor failure	Sensor failure	F2	1	T2B sensor failure	L3
12	Dial code setting error	Installation failure	U1	1	Model not set	L2
13	Dial code setting error	Installation failure	U1	2	Capacity not set	L2
14	The communication between the main control and the module is faulty	Communication failure	C4	1	Communication failure between main control and drive module	L2

Continued on next page

SERIES: **MUCM-W9, MUCM-W15**

Models:

MUCM-09-W9	**MUCM-09-W15**
MUCM-12-W9	**MUCM-12-W15**
MUCM-15-W9	**MUCM-15-W15**
MUCM-19-W9	**MUCM-19-W15**
MUCM-27-W9	**MUCM-27-W15**
MUCM-30-W9	**MUCM-30-W15**
MUCM-36-W9	**MUCM-36-W15**

	Fault definition	Applicable models	Classification Sub fault	New fault code (V11 version)	Subcode (V11)	Failure class (L1>L2>L3)
15	Indoor unit and external board communication failure	Communication failure	C6	1	Indoor unit and panel/display panel communication failure	L3
16	Indoor unit and external board communication failure	Communication failure	C7	8	Indoor unit and expansion board 2 communication failure	L2
17	Indoor unit and external board communication failure	Communication failure	C7	9	The communication between the Indoor unit and the adapter plate is faulty	L2
18	Humidity sensor failure (reserved)	Non-stop failure	EA	2	Humidity sensor failure	L3
19	Indoor unit and wired control communication failure	Communication failure	C5	1	Indoor unit and expansion board 2 communication failure	L3
20	Controller and panel sensor failure (reserved)	Non-stop failure	E3	1	Indoor unit and wired control communication failure	L3
21	Controller and panel sensor failure (reserved)	Non-stop failure	E3	3	External temperature sensor failure	L3
22	Out of range	Status class failure	P0	2	Anti-freezing protection	L3
23	Out of range	Status class failure	P0	1	Water temperature is too high	L3
24	Remote shutdown	Warning class	d6	1	Remote shutdown	L3

NOTE

* L1, L2, L3 means failure class, L1 fault shutdown, not recoverable; L2 fault shutdown, recoverable;L3 Fault alert, unit maintains minimum function operation.
* The “Jyz”("y" and "z" represent specific values) in the fan failure 2 means fan failure, different values represent different fan failure.
* For the DC ducted fan coil unit, there is no No. 10 T2A sensor failure and No. 11 T2B sensor failure.

SERIES: **MUC-W7/CE; MUC-W7/SE**
MUCM-W7; MUC-W9/CE
MUCM-W9/SE

LED Status	Information
LED Light flash 4 (flashing frecuency 0,5s and stop 2s)	Fan motor failure
LED Light continue to flashing (flashing frecuency 0,5s)	No set model

SERIES: **MUC-W9/CE; MUC-W9/SE**

Nº	Error	Name	Running Indicator	Fault Indicator	Buzzer action	Code
1	Error	EPROM communication error	Steady on	Flashes once every 3 seconds	Buzzes 2 times every 3 seconds	E7
2	Error	Room temperature sensor port abnormal	Steady on	Flashes 2 times every 3 seconds	Buzzes 2 times every 3 seconds	E2
3	Error	Coil sensor (T2C) port abnormal	Steady on	Flashes 3 times every 3 seconds	Buzzes 2 times every 3 seconds	E3
4	Error	Coil sensor (T2C) port abnormal	Steady on	Flashes 3 times every 3 seconds	Buzzes 2 times every 3 seconds	E4
5	Error	DC motor stall fault	Steady on	Flashes 4 times every 3 seconds	Buzzes 2 times every 3 seconds	E8
6	Protection (P*)	Water level exceeding warning line	Blinking	Flashes once every 3 seconds	Buzzes 2 times every 3 seconds	EE
7	Protection (P*)	Model protection not set (model DIP switch not listed in the model table)	Blinking	Flashes 2 times every 3 seconds	Buzzes 2 times every 3 seconds	PH
8	Protection (P*)	Water temperature protection	Blinking	Flashes 3 times every 3 seconds	Buzzes 2 times every 3 seconds	P1
9	Protection (P*)	Anti-freezing protection	Blinking	Flashes 4 times every 3 seconds	Buzzes 2 times every 3 seconds	P0
10	Protection (P*)	Remote shutdown	Blinking	Flashes 5 times every 3 seconds	Buzzes 2 times every 3 seconds	P2

SERIES: **MUPIR-H9, MUPIR-H8**

Models: **MUPIR-11-H9** **MUPIR-17-H8**
MUPIR-17-H9 **MUPIR-21-H9**

Nº	Code	Information
1	P01	Water Flow failure
2	P02	High pressure protection
3	P03	Low pressure protection
4	P04	T3 coil overheat protection
5	P05	Exhausting gas temperature protection
6	P06	Pipe temperature anti-freezing protection
7	P07	Pipe temperature anti-freezing protection
8	P08	High pressure protection 2
9	E01	Controller communication failure
10	E02	TP1 exhaust gas temperature sensor failure
11	E03	T3 coil temperature sensor failure
12	E04	T4 ambient temperature sensor failure
13	E05	T5 liquid gas temperature sensor failure
14	E06	TH return gas temperature sensor failure
15	E07	TW water tank temperature sensor failure
16	E08	T6 inlet water temperature sensor failure
17	E09	T7 outlet water temperature sensor failure
18	E10	Controller and drive PCB communnication failure
19	E11	Reserved
20	E12	Reserved
21	E13	Reserved
22	E14	Reserved
23	E15	DC main cable voltage extra low
24	E16	DC main cable voltage extra high
25	E17	AC Current protection (input side)
26	E18	IPM module abnormity
27	E19	PFC module abnormity
28	E20	Compressor start failure
29	E21	Compressor lack-phase
30	E22	IPM module reset
31	E23	Compressor over-current
32	E24	PFC module extra high temperature
33	E25	Current detection circuit failure
34	E26	Out of step
35	E27	PFC module temperature sensor abnormity
36	E28	Communication failure
37	E29	IPM module extra high temperature
38	E30	IPM middle temperature sensor failure
39	E31	Reserved
40	E32	IPM Adjustment data
41	E33	IPM Adjustment data
42	E34	AC Input voltage abnormality
43	E35	IPM adjustment data
44	E36	Reserved
45	E37	IPM module current frequency limits
46	E38	IPM module current frequency limits
47	E51	Failure of fan motor drive

SERIES: **MUACSM-H14**

Models: **MUACSM-100-H14-I**
MUACSM-190-H14-I

Eh0b	Tank and LCD panel communication error.
EH00	Machine working parameters are abnormal.
EL01	Faulty communication between water tank and outdoor unit
PH15	Leakage protection
EC54	Error of TP
EC53	Error of T4
EC52	Error of T3
EH5L	Error of T5L
EH5U	Error of T5U
EH5d	Electric heating disconnection protection
PHdH	Dry burning protection
EC51	Abnormal operating parameters of the outdoor unit
PH23	Anti-freeze protection for refrigeration status
PH24	Anti-freeze protection for low-temperature conditions
EC72	DC fan out of phase
PC12	341 Voltage protection or MCE fault
PC00	IPM module protection

Continued on next page

SERIES: **MUACSM-H14**

Models: **MUACSM-100-H14-I**
MUACSM-190-H14-I

PC01	1 Main control voltage protection
PC02	Compressor top temperature protection
PC03	System pressure protection or failure
PC04	Compressor feedback protection
PC08	Outdoor unit current protection
PC40	Outdoor main control & driver chip communication failure
PC43	Compressor phase failure protection
PC44	Compressor 0 speed protection
PC45	341PWM Synchronization Guarantee
PC46	Compressor stall protection
PC49	Compressor overcurrent protection
PC51	T2 high temperature protection
PC52	T2 low temperature protection
EC07	Outdoor unit fan stall protection
PH9b	Over-temperature protection for water tanks
EC55	IGBT sensor failure
EC56	T2b sensor failure

SERIES: **MUACS H14**

Models: **MUACS-80-H14**
MUACS-100-H14
MUACS-150-H14
MUACS-190-H14
MUACS-290-H14

EH0b	Tank and LCD panel communication error.
EH00	Machine working parameters are abnormal.
EH03	DC fan fault.
PH15	Electric leakage error. If PCB current_induction_circuit check the current difference between L,N > 14mA, system consider it as ”electric leakage error”.
EC54	Compressor discharge temperature sensor TP error.
EH5H	Compressor suction temperature sensor TH error.
EC53	Ambient temperature sensor T4 error.
EC52	Evaporator temperature sensor T3 error.
EH5L	Error of sensor T5L (lower water temperature sensor).
EH5U	Error of sensor T5U (upper water temperature sensor).
EHLA	When the ambient temperature T4 is out of the compressor operating range, the compressor stops, and EHLA is displayed until T4 returns to the normal range. Only works on units without electric heaters. Devices with electric heaters will never display “EHLA”.
EH5d	Electric heater open-circuit error.
EHHP	Heat pump system fault. When PH20, PH21, PC30, PC06 any protection appears 3 times or the protection lasts 1 hour.
PH20	Compressor abnormally stopped protection. The discharge temperature is not so higher than evaporator temperature after compressor running a term.
PH21	The working current of the compressor is too large.
PH24	Frost protection. T5L < 4°C and T4 < 7°C.
PC30	System high pressure protection 3.0 MPa active; 2.4 MPa inactive
PC06	High TP protection. Tp > 110°C(185L)Tp > 105°C(275L).Protection active; Tp à
PH9b	Overtemperature protection. The current water temperature exceeds the Maximum target temperature by more than 5°C .
PH91	Low T3 protection.

SERIES: **MUACS-H14**

Models: **MUACS-200-H14**
MUACS-300-H14
MUACS-200S-H14
MUACS-300S-H14

Code	Information
P1	Lower tank water temp. sensor failure
P2	Upper tank water temp. sensor failure
P3	Evaporator coil temp. sensor failure
P4	Return air temp sensor failure
P5	Ambient temp. sensor failure
P6	Solar temp. sensor failure
P7	Electronicanode outputopenor shortcircuit
P8	Electronicanode outputvoltage exceedsnormal workingrange
CE	Emergency switchoff
E1	Highpressure protection(HP Switch)
E2	Lowpressure protection(LP Switch)
E3	Overheat protection(HTP Switch)
E4	Solarthermal collectorhigh temprotection
E5	Waterflow failure
E8	Communication failure
❄	Defrost

SERIES: **MAM-V10; MAB-V10**

Models:

MAB-4-V10M
MAB-6-V10M
MAB-8-V10M
MAB-10-V10M
MAB-12-V10M
MAB-14-V10M
MAB-16-V10M
MAB-12-V10T
MAB-14-V10T
MAB-16-V10T

Code	Information
C7	Transducer module temperature too high protection
E0	Water flow failure (E8 appears 3 times)
E1	Phase sequence error (for 3 phase models)
E2	Communication error between the main control board of hydraulic module and user interface
E3	Backup electric heater exchanger water outlet temperature sensor T1 error
E4	Domestic hot water tank temperature sensor T5 error
E5	Air side heat exchanger refrigerant outlet temperature sensor T3 error
E6	Outdoor ambient temperature sensor T4 error
E7	Balance tank sensor Tbt1 error
E8	Water flow failure within 3 times
E9	Suction pipe temperature sensor Th error
EA	Discharge pipe temperature sensor Tp error
Eb	Solar board sensor Tsolar error
Ec	Balance tank sensor Tbt2 error
Ed	Water side heat exchanger water inlet temperature sensor Twin error
EE	Hydronic box EEPROM error
F1	DC generatrix voltage is too low
H0	Communication error between outdoor unit main control chip and hydronic box main control chip
H1	Communication error between outdoor unit main control chip and inverter driver chip
H2	Water side heat exchanger refrigerant outlet (liquid pipe) temperature sensor T2 error
H3	Water side heat exchanger refrigerant inlet (gas pipe) temperature sensor T2B error
H4	Inverter module protection (L0/L1 appear 3 times in one hour)
H5	Room temperature sensor Ta error
H6	DC fan error

Continued on next page

SERIES: **MAM-V10; MAB-V10**

Models:

MAB-4-V10M
MAB-6-V10M
MAB-8-V10M
MAB-10-V10M
MAB-12-V10M
MAB-14-V10M
MAB-16-V10M
MAB-12-V10T
MAB-14-V10T
MAB-16-V10T

Code	Information
H7	Abnormal main circuit voltage
H8	Pressure sensor error
H9	Zone 2 water outlet temperature sensor Tw2 error
HA	Water side heat exchanger water outlet temperature sensor error
Hb	PP protection appears three times in a row and Twout<7? H.F.
HF	Invert module EEPROM error
HH	H6 appears 10 times in 120min
HP	Low pressure protection (pressure < 0.6MPa for 3 times in one hour)
P0	Low pressure protection
P1	High pressure protection
P3	Compressor current protection
P4	Discharge temperature sensor Tp protection
P5	High temperature difference between water side heat exchanger water inlet and water outlet temperatures protection
P6	Inverter module protection
L0	Inverter module protection
L1	DC bus low voltage protection
L2	DC bus high voltage protection
L4	MCE error
L5	Zero speed protection
L7	Phase sequence error
L8	Compressor frequency variation greater than 15Hz within one second protection
L9	Actual compressor frequency differs from target frequency by more than 15Hz protection
Pd	Water side heat exchanger anti-freeze protection
Pb	Air side heat exchanger refrigerant outlet temperature sensor T3 error

Continued on next page

SERIES: **MAM-V10; MAB-V10**

Models: **HR-4-6-V10M**
HR-8-10-V10M
HR-12-14-16-V10M
HR-4-6-190L-V10M / HR-8-10-190L-V10M
HR-8-10-190L-V10M
HR-4-6-240L-V10M
HR-8-10-240L-V10M
HR-12-14-16-240L-V10M

Code	Information
C7	Transducer module temperature too high protection
E0	Water flow failure (E8 appears 3 times)
E1	Phase sequence error (for 3 phase models)
E2	Communication error between the main control board of hydraulic module and user interface
E3	Backup electric heater exchanger water outlet temperature sensor T1 error
E4	Domestic hot water tank temperature sensor T5 error
E5	Air side heat exchanger refrigerant outlet temperature sensor T3 error
E6	Outdoor ambient temperature sensor T4 error
E7	Balance tank sensor Tbt1 error
E8	Water flow failure within 3 times
E9	Suction pipe temperature sensor Th error
EA	Discharge pipe temperature sensor Tp error
Eb	Solar board sensor Tsolar error
Ec	Balance tank sensor Tbt2 error
Ed	Water side heat exchanger water inlet temperature sensor Twin error
EE	Hydronic box EEPROM error
F1	DC generatrix voltage is too low
H0	Communication error between outdoor unit main control chip and hydronic box main control chip
H1	Communication error between outdoor unit main control chip and inverter driver chip
H2	Water side heat exchanger refrigerant outlet (liquid pipe) temperature sensor T2 error
H3	Water side heat exchanger refrigerant inlet (gas pipe) temperature sensor T2B error

Continued on next page

SERIES: **MAM-V10; MAB-V10**

Models:
HR-4-6-V10M
HR-8-10-V10M
HR-12-14-16-V10M
HR-4-6-190L-V10M / HR-8-10-190L-V10M
HR-8-10-190L-V10M
HR-4-6-240L-V10M
HR-8-10-240L-V10M
HR-12-14-16-240L-V10M

Code	Information
H4	Inverter module protection (L0/L1 appear 3 times in one hour)
H5	Room temperature sensor Ta error
H6	DC fan error
H7	Abnormal main circuit voltage
H8	Pressure sensor error
H9	Zone 2 water outlet temperature sensor Tw2 error
HA	Water side heat exchanger water outlet temperature sensor error
Hb	Invert module EEPROM error
HF	H6 appears 10 times in 120min
HH	Low pressure protection
HP	Low pressure protection (pressure < 0.6MPa for 3 times in one hour)
P0	High pressure protection
P1	Compressor current protection
P3	Discharge temperature sensor Tp protection
P4	PP protection appears three times in a row and Twout

Continued on next page

SERIES: **MAM-V10; MAB-V10**

Models:

MAM-4-V10M
MAM-6-V10M
MAM-8-V10M
MAM-10-V10M
MAM-12-V10M
MAM-14-V10M
MAM-16-V10M
MAM-12-V10T
MAM-14-V10T
MAM-16-V10T

Code	Information
C7	Transducer module temperature too high protection
E0	Water flow failure (E8 appears 3 times)
E1	Phase sequence error (for 3 phase models)
E2	Communication error between the main control board of hydraulic module and user interface
E3	Backup electric heater exchanger water outlet temperature sensor T1 error
E4	Domestic hot water tank temperature sensor T5 error
E5	Air side heat exchanger refrigerant outlet temperature sensor T3 error
E6	Outdoor ambient temperature sensor T4 error
E7	Balance tank sensor Tbt1 error
E8	Water flow failure within 3 times
E9	Suction pipe temperature sensor Th error
EA	Discharge pipe temperature sensor Tp error
Eb	Solar board sensor Tsolar error
Ec	Balance tank sensor Tbt2 error
Ed	Water side heat exchanger water inlet temperature sensor Twin error
EE	Hydronic box EEPROM error
F1	DC generatrix voltage is too low
H0	Communication error between outdoor unit main control chip and hydronic box main control chip
H1	Communication error between outdoor unit main control chip and inverter driver chip
H2	Water side heat exchanger refrigerant outlet (liquid pipe) temperature sensor T2 error
H3	Water side heat exchanger refrigerant inlet (gas pipe) temperature sensor T2B error

Continued on next page

SERIES: **MAM-V10; MAB-V10**

Models:

MAM-4-V10M
MAM-6-V10M
MAM-8-V10M
MAM-10-V10M
MAM-12-V10M
MAM-14-V10M
MAM-16-V10M
MAM-12-V10T
MAM-14-V10T
MAM-16-V10T

Code	Information
H4	Inverter module protection (L0/L1 appear 3 times in one hour)
H5	Room temperature sensor Ta error
H6	DC fan error
H7	Abnormal main circuit voltage
H8	Pressure sensor error
H9	Zone 2 water outlet temperature sensor Tw2 error
HA	Water side heat exchanger water outlet temperature sensor error
Hb	PP protection appears three times in a row and Twout<7? H.F.
HF	Invert module EEPROM error
HH	H6 appears 10 times in 120min
HP	Low pressure protection (pressure < 0.6MPa for 3 times in one hour)
P0	Low pressure protection
P1	High pressure protection
P3	Compressor current protection
P4	Discharge temperature sensor Tp protection

SERIES: **MAM-V10 HIGH POWER**

Models: **MAM-18-V10T**
MAM-22-V10T
MAM-26-V10T
MAM-30-V10T

Code	Information
E0	Water flow fault (E8 displayed 3 times)
E1	Phase loss or neutral wire and live wire are connected reversely
E2	Communication fault between controller and main control board of hydraulic module
E3	Final outlet water temp. sensor (T1) fault.
E4	Water tank temp. sensor (T5) fault.
E5	The condenser outlet refrigerant temperature sensor (T3) fault.
E6	The ambient temperature sensor (T4) fault.
E7	The balance tank up temp. sensor (Tbt1) fault.
E8	Water flow fault.
E9	Compressor suction temp. sensor (Th) fault.
EA	Compressor discharge temp. sensor (Tp) fault.
Eb	Solar panel temp.sensor (Tsolar) fault.
EC	The balance tank low temp.sensor(Tbt2) fault
Ed	The plate exchanger water inlet temp. sensor (Tw_in) fault.
EE	The main control board of hydraulic module EEPROM fault.
bH	PED PCB fault
C7	High temp. protection of inverter module
F1	DC bus low voltage protection
H0	Communication fault between main control board of hydraulic module and main control board PCB B.
H1	Communication fault between inverter module PCB A and main control board PCB B.
H2	The plate exchanger refrigerant outlet (liquid pipe) temp. sensor (T2) fault.

Continued on next page

SERIES: **MAM-V10 HIGH POWER**

Models: **MAM-18-V10T**
MAM-22-V10T
MAM-26-V10T
MAM-30-V10T

Code	Information
H3	The plate exchanger refrigerant outlet (gas pipe) temp. sensor (T2B) fault.
H4	Three times P6 protection
H5	Room temp.sensor (Ta) fault
H6	DC fan motor fault.
H7	Main circuit voltage protection fault.
H8	Pressure sensor fault.
H9	Zone 2 water flow temp. sensor (Tw2) fault.
HA	The plate heat exchanger water outlet temperature sensor (Tw_out) fault.
Hb	Three times PP protection and Tw_out <7 ºC
Hd	Communication fault between master unit and slave unit (in parallel)
HE	Communication fault between main control board of hydrautic module and Ta / room thermostart transfer PCB.
HF	Inverter module board EE PROM fault
HH	H6 displayed 10 times in 120 minutes.
HP	Low pressure protection Pe<0.6 occured 3 times in 1 hour in cooling mode
P0	Low pressure protection
P1	High pressure protection
P3	Compressor overcurrent protection.
P4	Compressor discharge temp. too high protection
P5	High Temperature difference protection between water inlet and water outlet of the plate heat exchanger.
P6	Inverter module protection
Pb	Anti-freeze mode protection

Continued on next page

SERIES: **MAM-V10 HIGH POWER**

Models: **MAM-18-V10T**
MAM-22-V10T
MAM-26-V10T
MAM-30-V10T

Code	Information
Pd	High temperature protection of refrigerant outlet temp. of condenser.
PP	Water inlet temperature is higher than water outlet in heating mode
L0	DC compressor inverter module fault
L1	DC bus low voltage protection (from inverter module mostly when compressor running)
L2	DC bus high voltage protection from DC driver
L4	MCE fault
L5	Zero speed protection
L7	Phase sequence fault
L8	Compressor frequency variation greater than 15Hz within 1 second protection
L9	Actual compressor frequency differs from target frequency by more than 15Hz protection

SERIES: **MUAMR-H14**

Models:

MUAMR-04-H14	**MUAMR-14-H14**
MUAMR-06-H14	**MUAMR-16-H14**
MUAMR-08-H14	**MUAMR-12-H14T**
MUAMR-10-H14	**MUAMR-14-H14T**
MUAMR-12-H14	**MUAMR-16-H14T**

Code	Information
E0	water flow failure (10 times of E8)
E8	water flow protection
E2	Communication fault between User Interface and Main Control PCB
H0	Communication error of Main Control PCB
H1	Communication error between Main Control PCB and inverter PCB
Hd	Communication fault between master unit and slave unit.
E3	T1 Electric Heater/AHS water outlet temperature sensor error
E4	T5 Water tank temperature sensor error
E5	T3 Outdoor unit heat exchanger bottom temperature sensor error
E6	T4 Ambient temperature sensor error
E7	Tbt Balance tank temperature sensor/ Final outlet water temperature of cascade system sensor error
E9	Th Retur-air temperature sensor error
EA	Tp Discharge temperature sensor error
Eb	Tp Discharge temperature sensor error
EC	T5_2 Water tank temperature sensor error (Reserved)
Ed	Tw_in Plate heat exchanger inlet water temperature sensor error
FC1	TL Outdoor unit heat exchanger outlet temperature sensor error
H2	T2 Plate heat exchanger outlet refrigerant temperature sensor error
H3	T2B Plate heat exchanger inlet refrigerant temperature sensor error
H5	Ta room temperature sensor error
H8	H-SEN High pressure sensor error

SERIES: **MUAMR-H14**

Models:

MUAMR-04-H14	**MUAMR-14-H14**
MUAMR-06-H14	**MUAMR-16-H14**
MUAMR-08-H14	**MUAMR-12-H14T**
MUAMR-10-H14	**MUAMR-14-H14T**
MUAMR-12-H14	**MUAMR-16-H14T**

Code	Information
H9	Tw2 Zone 2 water flow temperature sensor error
HA	Tw_out Plate heat exchanger outlet water temperature sensor error
P21	L-SEN Low pressure sensor error
P27	H-SEN and L-SEN connected reversely (Detect when compressor is off)
E1	Phase loss or phase reversal
H7	Power overvoltage and Power under voltage protection
P0	Low pressure protection
P1	High pressure switch protection
P3	Overcurrent protection
P4	The protection for overhigh discharge temperature of Compressor
Pd	The protection for overhigh condensing temperature
HP	Low pressure protection in cooling mode
bA	T4 sensor out of operation range protection
PP	The protection for abnormal temperature difference between outlet water and inlet water
Hb	3 times of PP and Twout<7 ºC
P5	The big temperature difference between outlet water temp. and inlet water temp.
F1	The protection for undervolotage of DC bus
C7	Overhigh temperature protection for IPM module
H4	3 times of “L1*” in 60 mins
L1E	Hardware overcurrent protection
L11	Phase current instantaneous overcurrent protection

Continued on next page

SERIES: **MUAMR-H14**

Models:

MUAMR-04-H14
MUAMR-06-H14
MUAMR-08-H14
MUAMR-10-H14
MUAMR-12-H14
MUAMR-14-H14
MUAMR-16-H14
MUAMR-12-H14T
MUAMR-14-H14T
MUAMR-16-H14T

Code	Information
L12	Phase current continuous 30s overcurrent protection
L2E	Over-temperature protection
L3E	Bus voltage too low error
L31	Bus voltage too high error
L32	Bus voltage excessively high error
L34	Phase loss error of three-phase power supply
L43	Abnormal phase current sampling bias
L45	Fan motor code mismatch error
L46	IPM protection (FO)
L47	Module type mismatch
L5E	Motor failed to start
L52	Motor stalling protection
L6E	Phase loss protection
L61	compressor terminals short circuit protection
L65	IPM short circuit protection
LBE	Action of high pressure switch
LB7	PED bH error
LCE	PFC hardware overcurrent protection
LC1	Instantaneous overcurrent of pfc software protection
LC2	Software PFC protección continua contra sobrecorriente 30 s
LC3	PFC software continuous 30 s overcurrent protection

Continued on next page

SERIES: **MUAMR-H14**

Models:

MUAMR-04-H14	**MUAMR-14-H14**
MUAMR-06-H14	**MUAMR-16-H14**
MUAMR-08-H14	**MUAMR-12-H14T**
MUAMR-10-H14	**MUAMR-14-H14T**
MUAMR-12-H14	**MUAMR-16-H14T**

Code	Information
LC4	PFC power factor is less than 0.8
LC5	PFC valid value overcurrent protection
LC6	PFC1 channel hardware overcurrent protection
LC7	PFC2 channel hardware overcurrent protection
LC8	PFC3 channel hardware overcurrent protection
LC9	Over-temperature protection of PFC module
LCA	PFC module CBC overcurrent error protection
LCB	Overvoltage of PFC bus or PFC half bus
LCC	Short circuit of PFC IGBT
LCD	Abnormal PFC Ad sampling bias
H6	Fan failure
HH	10 times of H6 in 120min
J1E	Hardware overcurrent protection
J11	Phase current instantaneous overcurrent protection
J12	Phase current continuous 30s overcurrent protection
J2E	Over-temperature protection
J3E	Error de tensión del bus demasiado baja
J31	Bus voltage too high error
J32	Bus voltage excessively high error
J43	Abnormal phase current sampling bias
J45	Fan motor code mismatch error

Continued on next page

SERIES: **MUAMR-H14**

Models:

MUAMR-04-H14
MUAMR-06-H14
MUAMR-08-H14
MUAMR-10-H14
MUAMR-12-H14
MUAMR-14-H14
MUAMR-16-H14
MUAMR-12-H14T
MUAMR-14-H14T
MUAMR-16-H14T

Code	Information
J46	IPM PROTECTION (FO)
J47	Module type mismatch (after module resistance tested)
J5E	Motor failed to start
J52	Motor stalling protection
J6E	Phase loss protection
J61	Fan terminals short circuit protection
J65	IPM short circuit protection
HF	Outdoor unit EEPROM error
Pb	Pb is the indicator that shows the system is running in anti-freezing control
C2	Relay adhesion on IBH PCB
C3	Current transformer failure or circuit failure of IBH PCB
C4	C3>3 times
F75	Insufficient discharge superheat protection

MUNDOCLIMA®

www.mundoclima.com