MUNDOCLIMA®

# DESPIECES

MUPR-H3
MUPR-H4
MUPR-H5
MULTI-H3
COMERCIAL-H3
CONDUCTO-H5

CL20801 a CL20869
CL20736 a CL20738
CL20781 a CL20782
07/09/2015

# INDICE

MUPR-H3 ..... 3
1. Uds. Interiores MUPR-H3 (UI20801 a 804) ..... 4
2. Uds. Exteriores MUPR-H3 (UE20801 a 804) ..... 8
MUPR-H4 ..... 12
1. Uds. Interiores MUPR-H4 (UI20805 a 808) ..... 13
2. Uds. Exteriores MUPR-H4 (UE20805 a 808) ..... 17
MUPR-H5 ..... 21
1. Uds. Interiores MUPR-H5 (UI20736 a 738) ..... 22
2. Uds. Exteriores MUPR-H5 (UE20736 a 738) ..... 25
Multi-H3 ..... 28
1. Uds. Exteriores MUEX -H3 (CL20810 a 814) ..... 29
2. Uds. Interiores MUPR-H3M (UE20820 a 823) ..... 37
3. Uds. Interiores MUCSR-H3M (CL20824 a 826) ..... 45
4. Uds. Interiores MUCNR-H3M (UE20827 a 829) ..... 53
5. Uds. Interiores MUSTR-H3M (CL20830 a 833) ..... 59
6. Uds. Interiores MUCR-H3M (UE20834 a 838) ..... 67
Comercial H3 ..... 79
1. Uds. Exteriores Comercial H3 (UE20842 a 869) ..... 80
2. Uds. Interiores MUCSR-H3 (UI20842 a 849) ..... 96
3. Uds. Interiores MUSTR-H3 (UI20853 a 859) ..... 115
4. Uds. Interiores MUCR-H3 (UI20862 a 869) ..... 129
Conducto H5 ..... 145
1. Uds. Exteriores MUCR-H5 (UE20781 a 782) ..... 146
2. Uds. Interiores MUCR-H5 (UI20781 a 782) ..... 150

# INVERTER SERIE H3

## Despiece

# MUPR-H3

## MUPR-09-H3
UI20801

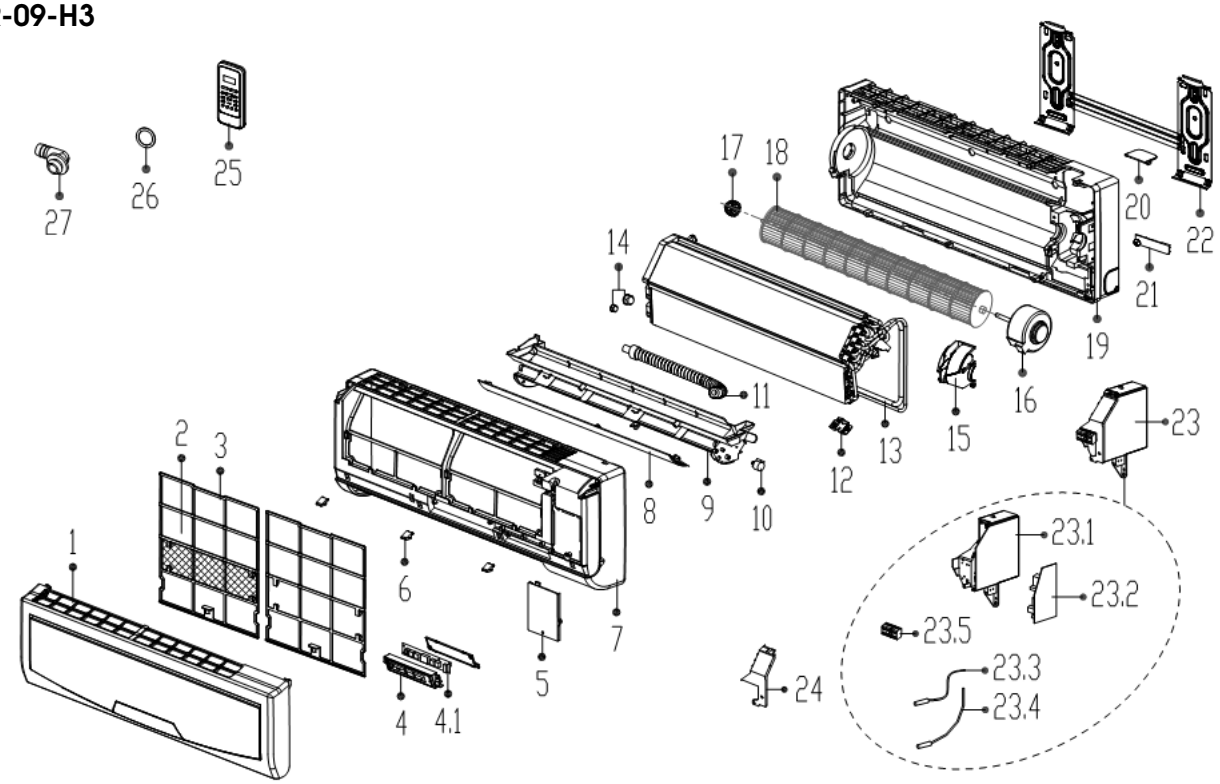


| Nº | Descripción | Ud. | Ref. Proveedor | Código |
|---|---|---|---|---|
| 1 | Panel frontal | 1 | 2011323A3444 | |
| 2 | Filtro de aire | 1 | 201131410703 | |
| 3 | Filtro limpiador | 2 | 201132391067 | |
| 4 | Conjunto display | 1 | 2033323A1794 | CL92553 |
| 4.1 | Placa display | 1 | 201333090165 | |
| 5 | Tapa | 1 | 201132392606 | |
| 6 | Tapón de rosca | 3 | 201132390919 | |
| 7 | Carcasa frontal | 1 | 201132390908 | |
| 8 | Lama horizontal | 1 | 201132390909 | |
| 9 | Conjunto bandeja condensados | 1 | 201132390496 | |
| 10 | Motor lamas | 1 | 202400200006 | |
| 11 | Tubo drenaje | 1 | 201101020038 | |
| 12 | Abrazadera sonda de batería | 1 | 201102000305 | |
| 13 | Intercambiador completo | 1 | 201532390208 | |
| 14 | Tuerca tubería 7/16"-20UNF | 1 | 201600320000 | |
| 14 | Tuerca tubería 5/8"-18UNF | 1 | 201600320001 | |
| 15 | Cubierta del motor ventilador | 1 | 201130120963 | |
| 16 | Motor ventilador RPG13H | 1 | 202400300009 | CL92440 |
| 17 | Base cojinete | 1 | 202719900606 | |
| 18 | Ventilador | 1 | 201100200011 | CL92462 |
| 19 | Carcasa trasera | 1 | 201132390907 | |
| 20 | Cubierta trasera chasis | 1 | 201132390920 | |
| 21 | Abrazadera | 1 | 201130100204 | |
| 22 | Placa montaje | 1 | 201230390006 | |
| 23 | Conjunto eléctrico completo | 1 | 203332391075 | CL92448 |
| 23.1 | Caja conjunto eléctrico | 1 | 201131590044 | |
| 23.2 | Placa eléctronica principal | 1 | 201332391516 | CL92497 |
| 23.3 | Sonda ambiente (T1) | 1 | 202432390005 | |
| 23.4 | Sonda batería (T2) | 1 | 202301300080 | CL92467 |
| 23.5 | Regleta conexiones | 1 | 202301450119 | |
| 24 | Tapa conjunto eléctrico | 1 | 201132390227 | |
| 25 | Control remoto R51M/E | 1 | 203355000031 | CL92433 |
| 26 | Junta drenaje | 1 | 202720090001 | CL92477 |
| 27 | Pipeta drenaje | 1 | 201101020011 | CL92476 |

## MUPR-12-H3
UI20802

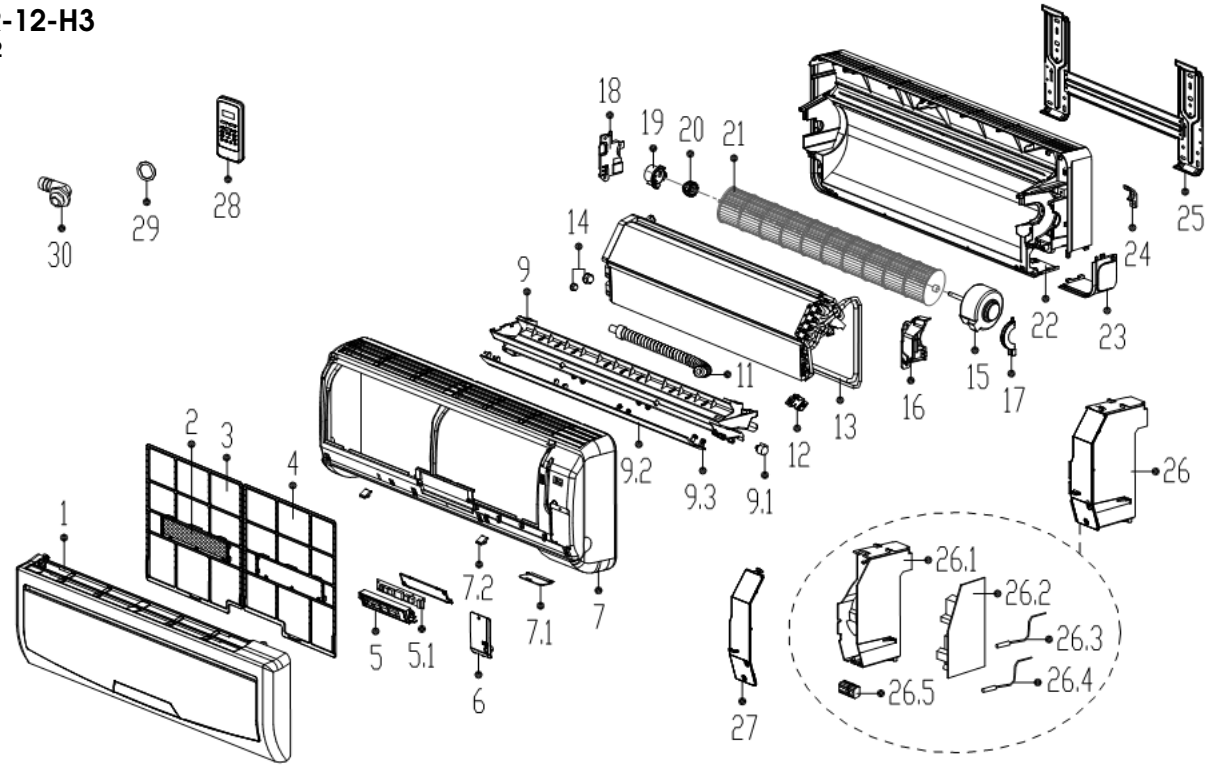


| Nº | Descripción | Ud. | Ref. Proveedor | Código |
|---|---|---|---|---|
| 1 | Panel frontal | 1 | 2011325A4854 | |
| 2 | Filtro limpiador | 1 | 201131410703 | |
| 3 | Filtro de aire | 1 | 201132591021 | |
| 4 | Filtro de aire | 1 | 201132591020 | |
| 5 | Conjunto display | 1 | 2033323A1794 | CL92553 |
| 5.1 | Placa display | 1 | 201333090165 | |
| 6 | Tapa | 1 | 201132591077 | |
| 7 | Carcasa frontal | 1 | 201132590672 | CL92479 |
| 7.1 | Tapa | 1 | 201132590755 | |
| 7.2 | Tapón de rosca | 2 | 201132590763 | |
| 9 | Conjunto bandeja condensados | 1 | 201132591032 | CL92179 |
| 9.1 | Motor lamas | 1 | 202400200027 | CL92436 |
| 9.2 | Lama horizontal superior | 1 | 201132590758 | CL92460 |
| 9.3 | Lama horizontal inferior | 1 | 201132590759 | CL92461 |
| 11 | Tubo drenaje | 1 | 201101020038 | |
| 12 | Abrazadera sonda de batería | 1 | 201102000305 | |
| 13 | Intercambiador completo | 1 | 201532390166 | |
| 14 | Tuerca tubería 5/8"-18UNF | 1 | 201600320001 | |
| 14 | Tuerca tubería 7/16"-20UNF | 1 | 201600320000 | |
| 15 | Motor ventilador RPG20E | 1 | 202400400213 | CL92442 |
| 16 | Cubierta del motor ventilador | 1 | 201132590114 | |
| 17 | Placa fijación motor | 1 | 201132790084 | |
| 18 | Placa fijación rodamiento | 1 | 201132790086 | |
| 19 | Sujeción rodamiento | 1 | 201132590951 | |
| 20 | Base cojinete | 1 | 202732590001 | |
| 21 | Ventilador | 1 | 201100200020 | CL92463 |
| 22 | Carcasa trasera | 1 | 201132590675 | |
| 23 | Tapa inferior derecha | 1 | 201132590674 | |
| 24 | Abrazadera | 1 | 201132790085 | |
| 25 | Placa montaje | 1 | 201232390008 | |
| 26 | Conjunto eléctrico completo | 1 | 203332490285 | CL92449 |
| 26.1 | Caja conjunto eléctrico | 1 | 201132790651 | |
| 26.2 | Placa eléctronica principal | 1 | 201332591031 | CL92257 |
| 26.3 | Sonda ambiente (T1) | 1 | 202301300210 | CL92466 |
| 26.4 | Sonda batería (T2) | 1 | 202301300080 | CL92467 |
| 26.5 | Regleta conexiones | 1 | 202301450119 | |
| 27 | Tapa conjunto eléctrico | 1 | 201132790648 | |
| 28 | Control remoto R51M/E | 1 | 203355000031 | CL92433 |
| 29 | Junta drenaje | 1 | 202720090001 | CL92477 |
| 30 | Pipeta drenaje | 1 | 201101020011 | CL92476 |

## MUPR-18-H3
UI20803

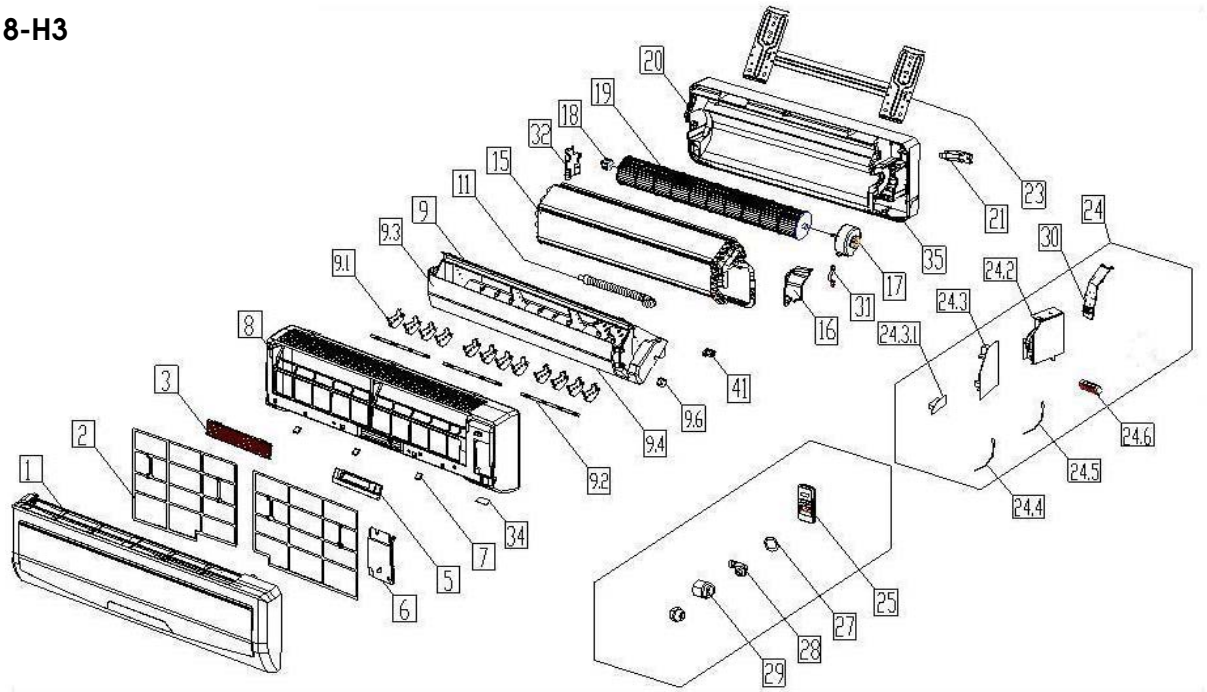


| Nº | Descripción | Ud. | Ref. Proveedor | Código |
|---|---|---|---|---|
| 1 | Panel frontal | 1 | 201132790394 | |
| 2 | Filtro de aire | 2 | 201132790653 | |
| 3 | Filtro limpiador | 1 | 201131410703 | |
| 5 | Conjunto display | 1 | 203332790162 | CL92271 |
| 6 | Cubierta 1 box eléctrico | 1 | 201132790090 | |
| 7 | Tapa tornillos | 3 | 201132790578 | |
| 8 | Carcasa frontal | 1 | 201132790545 | |
| 9 | Conjunto bandeja condensados | 1 | 201132790658 | |
| 9.1 | Lama vertical | 3 | 201132790339 | |
| 9.1 | Lama vertical | 9 | 201132790338 | |
| 9.2 | Sujeción lama | 3 | 201132790340 | |
| 9.3 | Lama horizontal superior | 1 | 201132790568 | CL92455 |
| 9.4 | Lama horizontal inferior | 1 | 201132790567 | CL92456 |
| 9.6 | Motor lamas | 1 | 202400200027 | CL92436 |
| 11 | Tubo drenaje | 1 | 201101020038 | |
| 15 | Intercambiador | 1 | 201532890129 | |
| 16 | Cubierta motor ventilador | 1 | 201132790097 | |
| 17 | Motor ventilador RPG25 | 1 | 202400300413 | CL92441 |
| 18 | Base cojinete | 1 | 202732590001 | |
| 19 | Ventilador | 1 | 201100290012 | CL92464 |
| 20 | Chassis | 1 | 201132790382 | |
| 21 | Abrazadera | 1 | 201132790085 | |
| 23 | Placa montaje | 1 | 201232390008 | |
| 24 | Conjunto eléctrico | 1 | 203332890572 | CL92450 |
| 24.2 | Cubierta 1 box eléctrico | 1 | 201132790651 | |
| 24.3 | Placa eléctronica principal | 1 | 201332890613 | CL92496 |
| 24.3.1 | Condensador del motor ventilador | 1 | 202401200001 | |
| 24.4 | Sonda ambiente (T1) | 1 | 202433190000 | CL92457 |
| 24.5 | Sonda batería (T2) | 1 | 202301300080 | CL92467 |
| 24.6 | Regleta conexiones | 1 | 202301450119 | |
| 25 | Control remoto | 1 | 203355000031 | CL92433 |
| 27 | Junta drenaje | 1 | 202720090001 | CL92477 |
| 28 | Pipeta drenaje | 1 | 201101020011 | CL92476 |
| 29 | Tuerca tubería | 1 | 201600330003 | |
| 29 | Tuerca tubería | 1 | 201600330001 | |
| 30 | Cubierta 2 box eléctrico | 1 | 201132790648 | |
| 31 | Fijación motor ventilador | 1 | 201132790084 | |
| 34 | Panel frame front cover | 1 | 201132790547 | |
| 35 | Portada del chasis | 1 | 201132790548 | |
| 41 | Abrazadera sonda de batería | 1 | 201102000305 | |

## MUPR-24-H3
UI20804

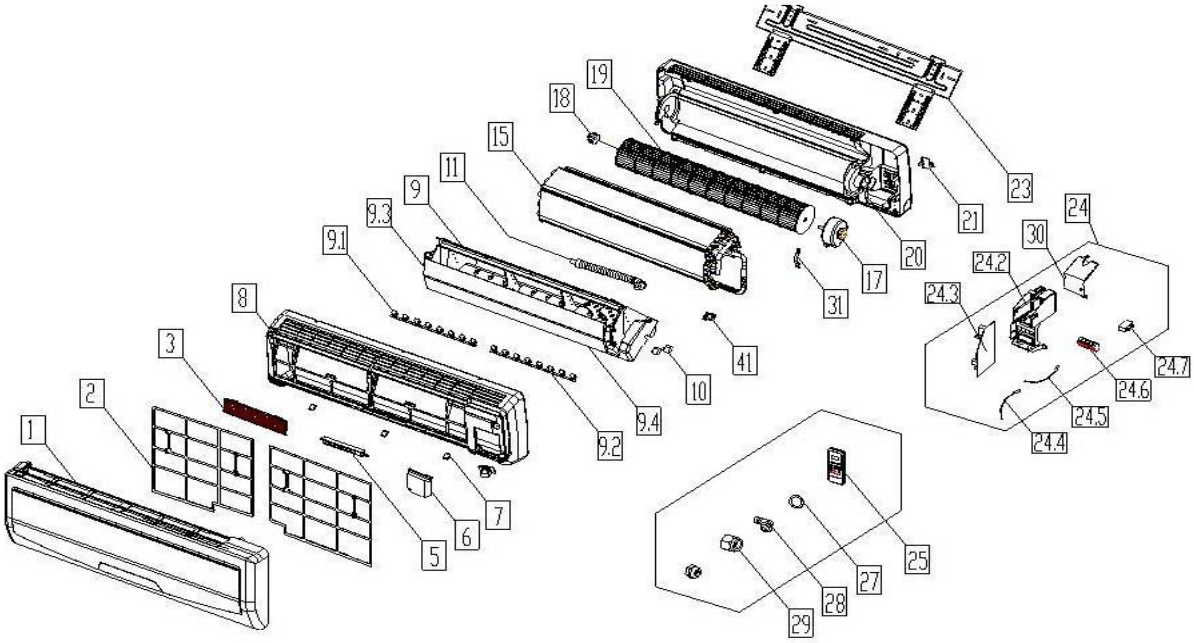


| Nº | Descripción | Ud. | Ref. Proveedor | Código |
|---|---|---|---|---|
| 1 | Panel frontal | 1 | 201133090666 | CL92245 |
| 2 | Filtro de aire | 1 | 201133091019 | CL92251 |
| 2 | Filtro de aire | 1 | 201133091018 | CL92252 |
| 3 | Filtro limpiador | 1 | 201130100212 | |
| 5 | Conjunto display | 1 | 203333090143 | |
| 6 | Cubierta 1 box eléctrico | 1 | 201133090120 | |
| 7 | Tapa tornillos | 3 | 201133090557 | |
| 8 | Carcasa frontal | 1 | 201133090634 | CL92246 |
| 9 | Conjunto bandeja condensados | 1 | 201132990013 | CL92248 |
| 9.1 | Lama vertical | 14 | 201133090438 | |
| 9.1 | Lama vertical | 2 | 201133090437 | |
| 9.2 | Sujeción lama | 2 | 201133090439 | |
| 10 | Motor lamas | 1 | 202400200004 | CL92435 |
| 11 | Tubo drenaje | 1 | 201101020038 | |
| 15 | Intercambiador | 1 | 201532990037 | |
| 17 | Motor ventilador YDK36-4C(A) | 1 | 202400400245 | CL92443 |
| 18 | Base cojinete | 1 | 202733090000 | |
| 19 | Ventilador | 1 | 201100200316 | CL92465 |
| 20 | Chassis | 1 | 201132990039 | CL92247 |
| 21 | Abrazadera | 1 | 201133090009 | |
| 23 | Placa montaje | 1 | 201232990002 | |
| 24 | Conjunto eléctrico | 1 | 203333090463 | CL92451 |
| 24.2 | Cubierta 1 box eléctrico | 1 | 201133090117 | |
| 24.3 | Placa eléctronica principal | 1 | 201333090670 | CL92273 |
| 24.4 | Sonda ambiente (T1) | 1 | 202433190000 | CL92457 |
| 24.5 | Sonda batería (T2) | 1 | 202301300080 | CL92467 |
| 24.6 | Regleta conexiones | 1 | 202301450119 | |
| 24.7 | Condensador del motor ventilador | 1 | 202401100353 | |
| 24.9 | Placa relés | 1 | 201333090408 | CL92570 |
| 25 | Control remoto | 1 | 203355000031 | CL92433 |
| 27 | Junta drenaje | 1 | 202720090001 | CL92477 |
| 28 | Pipeta drenaje | 1 | 201101020011 | CL92476 |
| 29 | Tuerca tubería | 1 | 201600330004 | |
| 29 | Tuerca tubería | 1 | 201600330002 | |
| 30 | Cubierta 2 box eléctrico | 1 | 201133090131 | |
| 31 | Fijación motor ventilador | 1 | 201133090128 | |
| 38 | Lama horizontal superior | 1 | 201132990032 | CL92474 |
| 39 | Lama horizontal inferior | 1 | 201132990033 | CL92475 |
| 41 | Abrazadera sonda de batería | 1 | 201102000305 | |

## MUPR-09-H3

UE20801

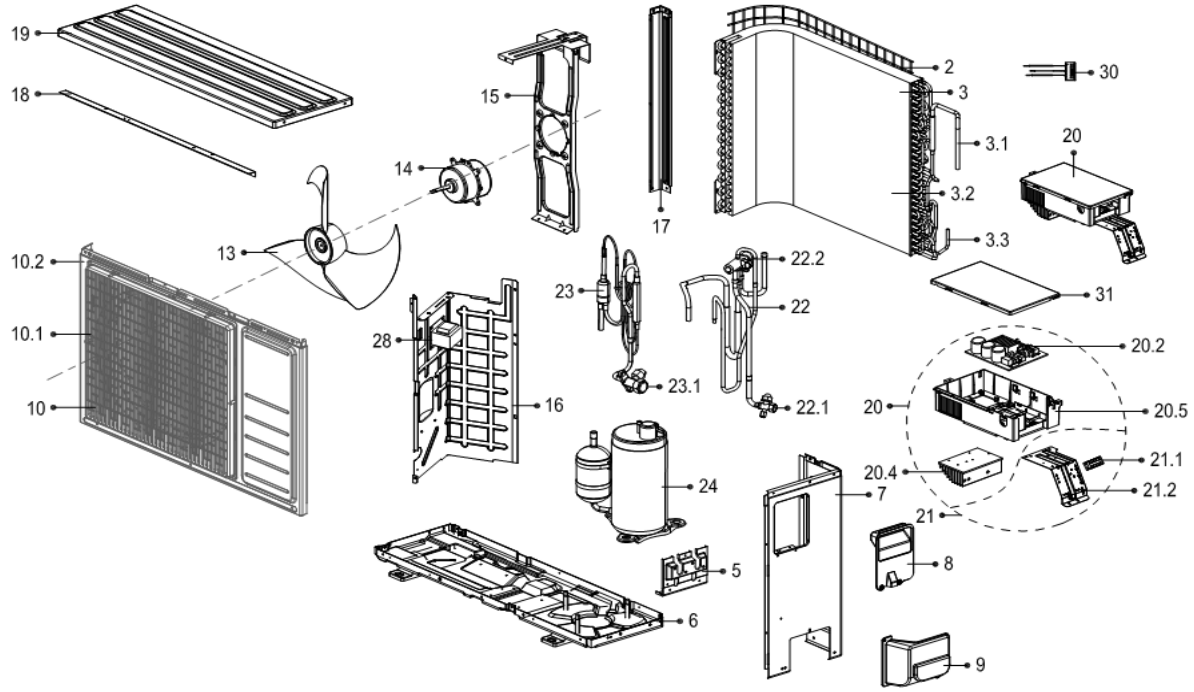


| Nº | Descripción | Ud. | Ref. Proveedor | Código |
|---|---|---|---|---|
| 2 | Red trasera | 1 | 2011376G0001 | |
| 3 | Intercambiador completo | 1 | 201537591110 | |
| 3.1 | Conjunto del tubo de entrada | 1 | 201637400715 | |
| 3.2 | Intercambiador (solo) | 1 | 201535260671 | |
| 3.3 | Tubería de salida | 1 | 201648890033 | |
| 5 | Tapa de las válvulas | 1 | 201237300285 | |
| 6 | Base | 1 | 201237400422 | |
| 7 | Tapa lateral derecha | 1 | 201237390082 | |
| 8 | Tapa conexiones | 1 | 201148100123 | |
| 9 | Tapa de válvulas | 1 | 201137390017 | |
| 10 | Panel frontal completo | 1 | 201237400429 | |
| 10.1 | Rejilla frontal | 1 | 201137590017 | |
| 10.2 | Panel frontal | 1 | 201237400411 | |
| 13 | Ventilador axial | 1 | 201100390002 | CL92459 |
| 14 | Motor ventilador WZDK35-38G | 1 | 202400370023 | CL92439 |
| 15 | Soporte motor ventilador | 1 | 201237400049 | |
| 16 | Placa partición interior | 1 | 201237490025 | |
| 17 | Soporte lateral izquerdo trasero | 1 | 201237400397 | |
| 18 | Soporte motor ventilador (superior) | 1 | 201237400055 | |
| 19 | Tapa superior | 1 | 201237400412 | |
| 20 | Conjunto eléctrico | 1 | 203337390227 | CL92445 |
| 20.2 | Placa electrónica principal | 1 | 201337390189 | CL92274 |
| 20.4 | Radiador termico | 1 | 202301901117 | |
| 20.5 | Soporte box eléctrico | 1 | 201137490028 | |
| 21 | Placa de terminales completa | 1 | 203337490049 | |
| 21.1 | Bornero conexiones | 1 | 202301400377 | |
| 21.2 | Placa terminales | 1 | 201237490039 | |
| 22 | Válvula 4 vías completa | 1 | 201637391535 | |
| 22.1 | Valvula de gas 3/8" | 1 | 201600720094 | |
| 22.2 | Válvula de 4 vías | 1 | 201600690010 | |
| 23 | Válvula de líquido completa | 1 | 201637391533 | |
| 23.1 | Válvula de líquido 1/4" | 1 | 201600700078 | |
| 24 | Compresor DA108X1C-23EZ | 1 | 201400601230 | CL92430 |
| 28 | Reactor | 1 | 202301000847 | CL92452 |
| 30 | Conjunto sensores temperatura | 1 | 202301300602 | CL92468 |
| 31 | Cubierta del box eléctrico | 1 | 201137490029 | |

## MUPR-12-H3
UE20802

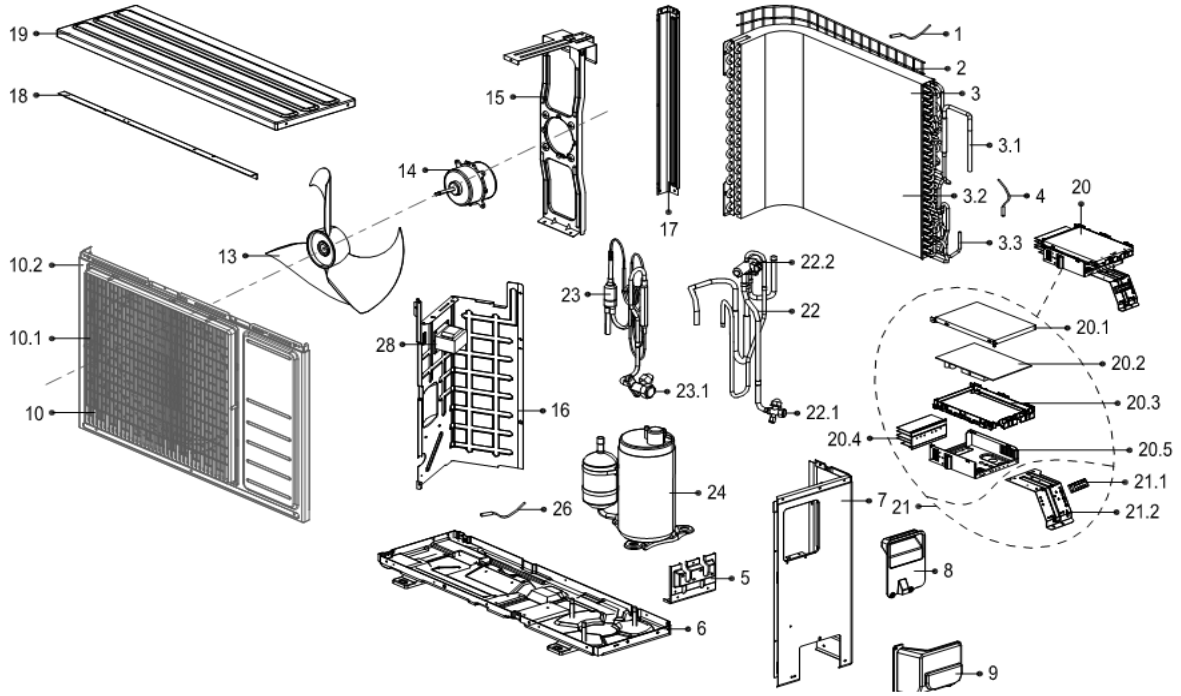


| Nº | Descripción | Ud. | Ref. Proveedor | Código |
|---|---|---|---|---|
| 1 | Sonda temperatura ambiente (T4) | 1 | 202301310063 | CL92480 |
| 2 | Red trasera | 1 | 2011376G0001 | |
| 3 | Intercambiador completo | 1 | 201537591110 | |
| 3.1 | Conjunto del tubo de entrada | 1 | 201637400715 | |
| 3.2 | Intercambiador (solo) | 1 | 201535260671 | |
| 3.3 | Tubería de salida | 1 | 201648890033 | |
| 4 | Sonda temperatura de batería (T3) | 1 | 202440500004 | CL92469 |
| 5 | Tapa de las válvulas | 1 | 201237300285 | |
| 6 | Base | 1 | 201237400422 | |
| 7 | Tapa lateral | 1 | 201237390082 | |
| 8 | Tapa conexiones | 1 | 201148100123 | |
| 9 | Tapa de válvulas | 1 | 201137390017 | |
| 10 | Rejilla frontal | 1 | 201237400429 | |
| 10.1 | Parrilla | 1 | 201137590017 | |
| 10.2 | Panel frontal | 1 | 201237400411 | |
| 13 | Ventilador axial | 1 | 201100390002 | CL92459 |
| 14 | Motor ventilador WZDK35-38G(H) | 1 | 202400300060 | CL92438 |
| 15 | Soporte motor ventilador | 1 | 201237400049 | |
| 16 | Placa partición interior | 1 | 201237400423 | |
| 17 | Soporte lateral izquerdo trasero | 1 | 201237400397 | |
| 18 | Soporte motor ventilador (superior) | 1 | 201237400055 | |
| 19 | Tapa superior | 1 | 201237400412 | |
| 20 | Conjunto eléctrico | 1 | 203337590102 | CL92446 |
| 20.1 | Tapa conjunto eléctrico | 1 | 201237300162 | |
| 20.2 | Placa electrónica principal | 1 | 201337590070 | CL92275 |
| 20.3 | Soporte placa electrónica | 1 | 201137300162 | |
| 20.4 | Radiador termico | 1 | 202301990015 | |
| 20.5 | Base conjunto eléctrico | 1 | 201237300033 | |
| 21 | Soporte bornero conexiones | 1 | 203337490049 | |
| 21.1 | Bornero conexiones | 1 | 202301400377 | |
| 21.2 | Placa terminales | 1 | 201237490039 | |
| 22 | Válvula 4 vías completa | 1 | 201637391535 | |
| 22.1 | Valvula de gas 3/8" | 1 | 201600720094 | |
| 22.2 | Válvula de 4 vías | 1 | 201600690010 | |
| 23 | Válvula de líquido completa | 1 | 201637490760 | |
| 23.1 | Válvula de líquido 1/4" | 1 | 201600700078 | |
| 24 | Compresor DA108X1C-23EZ | 1 | 201400601230 | CL92430 |
| 26 | Sonda temperatura descarga (T5) | 1 | 202301310068 | CL92470 |
| 28 | Reactor | 1 | 202301000867 | CL92453 |

## MUPR-18-H3
UE20803

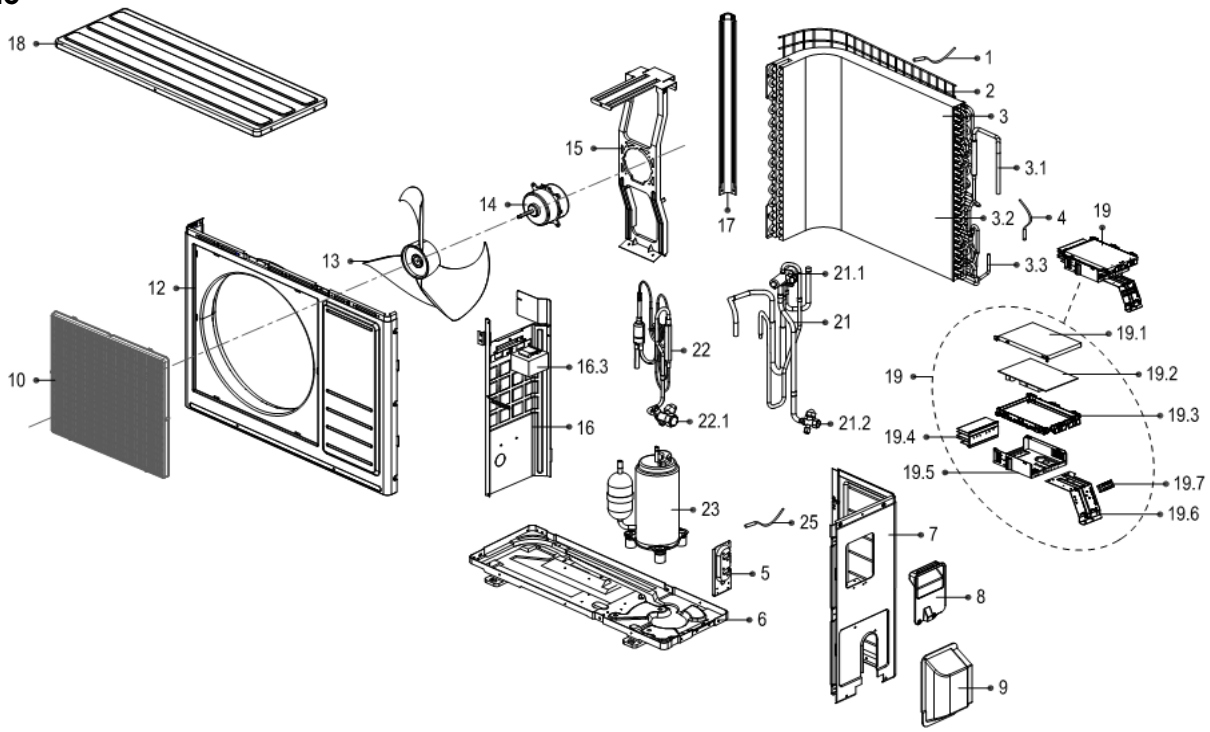


| Nº | Descripción | Ud. | Ref. Proveedor | Código |
|---|---|---|---|---|
| 1 | Sonda temperatura ambiente (T4) | 1 | 202301310063 | CL92480 |
| 2 | Red trasera | 1 | 2011374G0003 | |
| 3 | Intercambiador completo | 1 | 201537390033 | |
| 3.1 | Conjunto del tubo de entrada | 1 | 201637490766 | |
| 3.2 | Intercambiador (solo) | 1 | 201537390034 | |
| 3.3 | Tubería de salida | 1 | 201637490176 | |
| 4 | Sonda temperatura de batería (T3) | 1 | 202440500004 | CL92469 |
| 5 | Tapa de las válvulas | 1 | 201237200282 | |
| 6 | Base | 1 | 201237590093 | |
| 7 | Tapa lateral | 1 | 201237500263 | |
| 8 | Tapa conexiones | 1 | 201148100123 | |
| 9 | Tapa de válvulas | 1 | 201137400000 | |
| 10 | Rejilla frontal | 1 | 201137590017 | |
| 12 | Panel fronal | 1 | 201237400392 | |
| 13 | Ventilador axial | 1 | 201100390002 | CL92459 |
| 14 | Motor ventilador WZDK35-38G(H) | 1 | 202400300060 | CL92438 |
| 15 | Soporte motor ventilador | 1 | 201237390026 | |
| 16 | Placa partición interior | 1 | 201237500242 | |
| 16.3 | Reactancia | 1 | 202301000903 | |
| 17 | Soporte lateral izquerdo trasero | 1 | 201237400400 | |
| 18 | Tapa superior | 1 | 201237900028 | |
| 19 | Conjunto eléctrico | 1 | 203337890345 | |
| 19.1 | Tapa conjunto eléctrico | 1 | 201237300162 | |
| 19.2 | Placa electrónica principal | 1 | 201337890027 | CL92444 |
| 19.3 | Soporte placa electrónica | 1 | 201137300162 | |
| 19.4 | Radiador termico | 1 | 202301990015 | |
| 19.5 | Base conjunto eléctrico | 1 | 201237300033 | |
| 19.6 | Soporte bornero conexiones | 1 | 201237590046 | |
| 19.7 | Bornero conexiones | 1 | 202301400377 | |
| 21 | Válvula 4 vías completa | 1 | 201637891258 | |
| 21.1 | Valvula de gas 1/2" | 1 | 201600720195 | |
| 21.2 | Válvula de 4 vías | 1 | 201600690011 | CL92582 |
| 22 | Válvula de líquido completa | 1 | 201637891260 | |
| 22.1 | Válvula de líquido 1/4" | 1 | 201600740523 | |
| 23 | Compressor DA130M1C-31FZ | 1 | 201400603269 | CL92432 |
| 25 | Sonda temperatura descarga (T5) | 1 | 202301310068 | CL92470 |

## MUPR-24-H3
UE20804

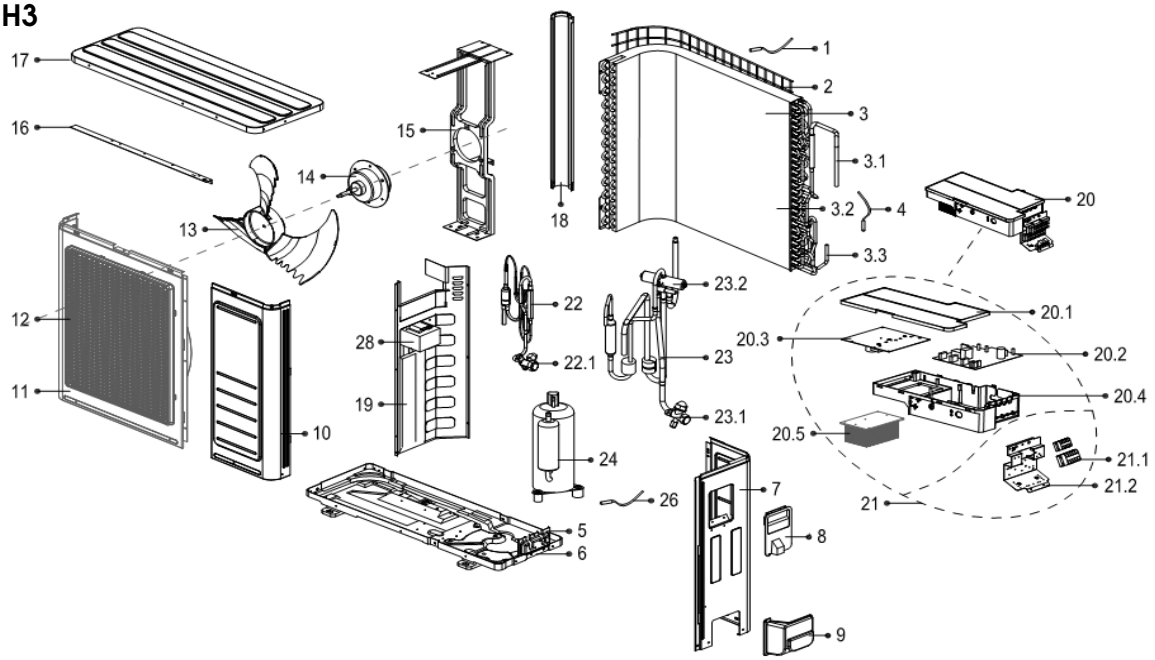


| Nº | Descripción | Ud. | Ref. Proveedor | Código |
|---|---|---|---|---|
| 1 | Sonda temperatura ambiente (T4) | 1 | 202301310075 | CL92471 |
| 2 | Red trasera | 1 | 2011481G0001 | |
| 3 | Intercambiador completo | 1 | 201537990084 | |
| 3.1 | Conjunto del tubo de entrada | 1 | 201637991011 | |
| 3.2 | Intercambiador (solo) | 1 | 201537990003 | |
| 3.3 | Tubería de salida | 1 | 201637991010 | |
| 4 | Sonda temperatura de batería (T3) | 1 | 202301300111 | CL92472 |
| 5 | Tapa de las válvulas | 1 | 201237300285 | |
| 6 | Base | 1 | 201237790056 | |
| 7 | Tapa lateral | 1 | 201237990048 | |
| 8 | Tapa conexiones | 1 | 201148100123 | |
| 9 | Tapa de válvulas | 1 | 201137390017 | |
| 10 | Rejilla frontal | 1 | 201248100389 | |
| 11 | Parrilla | 1 | 201248100390 | |
| 12 | Panel frontal | 1 | 201138090006 | |
| 13 | Ventilador axial | 1 | 201145500002 | CL92081 |
| 14 | Motor ventilador WZDK50-38G | 1 | 202400300033 | CL92437 |
| 15 | Soporte motor ventilador | 1 | 201257090031 | |
| 16 | Rear supporter | 1 | 201248100384 | |
| 17 | Tapa superior | 1 | 201248100266 | |
| 18 | Soporte lateral izquerdo trasero | 1 | 201248100367 | |
| 19 | Placa partición interior | 1 | 201257190118 | |
| 20 | Conjunto eléctrico | 1 | 203338090314 | CL92447 |
| 20.1 | Tapa conjunto eléctrico | 1 | 201157190011 | |
| 20.2 | Placa electrónica principal | 1 | 201338090068 | CL92276 |
| 20.3 | Placa IPM (Inverter) | 1 | 201357190085 | CL92277 |
| 20.4 | Base conjunto eléctrico | 1 | 201157190010 | |
| 20.5 | Radiador termico | 1 | 202301901173 | |
| 21 | Soporte bornero conexiones | 1 | 203338090313 | |
| 21.1 | Bornero conexiones | 1 | 202301450155 | |
| 21.2 | Placa terminales | 1 | 201257190117 | |
| 22 | Válvula de líquido completa | 1 | 201638091081 | |
| 22.1 | Válvula de líquido 3/8" | 1 | 201600740704 | |
| 23 | Válvula 4 vías completa | 1 | 201638091083 | |
| 23.1 | Valvula de gas 5/8" | 1 | 201600720296 | |
| 23.2 | Válvula de 4 vías | 1 | 201600690011 | CL92582 |
| 24 | Compressor DA250S2C-30MT | 1 | 201400601740 | CL92431 |
| 26 | Sonda temperatura descarga (T5) | 1 | 202448200000 | CL92473 |
| 28 | Reactor | 1 | 202301000943 | CL92454 |

# INVERTER SERIE H4

## Despiece

# MUPR-H4

## MUPR-09-H4
UI20805

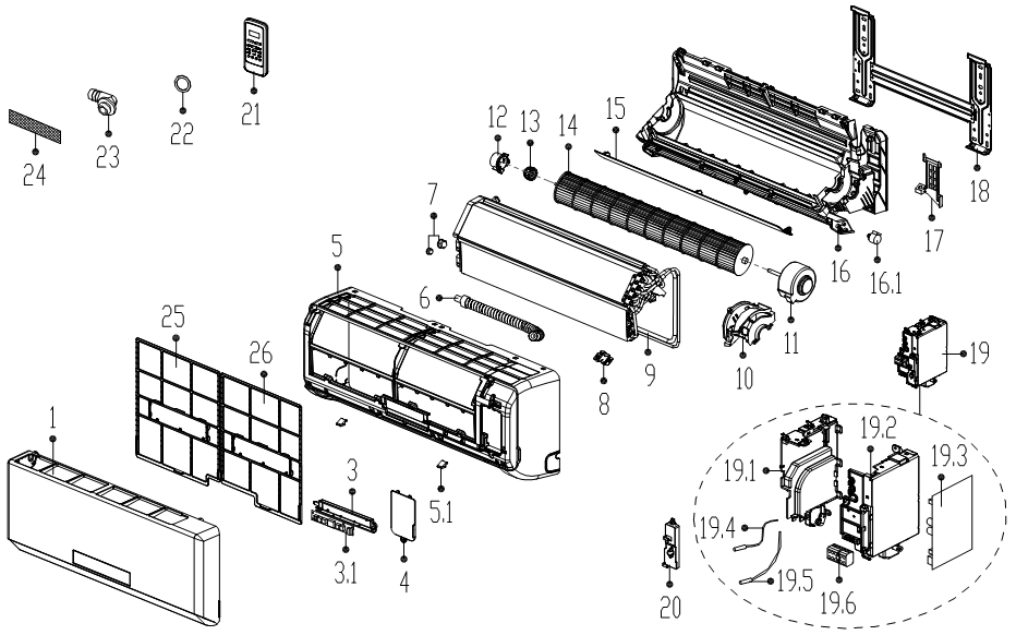


| Nº | Descripción | Ud. | Ref. Proveedor | Código |
|---|---|---|---|---|
| 1 | Panel frontal | 1 | 2011325A4854 | |
| 3 | Conjunto display | 1 | 2033323A1794 | CL92553 |
| 3.1 | Placa display | 1 | 2013323A1406 | CL92547 |
| 4 | Tapa conexiones | 1 | 201119901024 | |
| 5 | Carcasa | 1 | 201132591041 | |
| 5.1 | Tapa tornillos | 2 | 201119900950 | |
| 6 | Tubo drenaje | 1 | 201101020038 | |
| 7 | Tuerca tubería 5/8"-18UNF | 1 | 201600330002 | |
| 7 | Tuerca tubería 7/16"-20UNF | 1 | 201600330001 | |
| 8 | Fijación de la abrazadera del sensor de temperatura | 1 | 201102000305 | |
| 9 | Intercambiador | 1 | 201532390220 | |
| 10 | Cubierta motor ventilador | 1 | 201132490127 | |
| 11 | Motor ventilador RPG20E | 1 | 202400400213 | CL92442 |
| 12 | Cojinete | 1 | 201119900952 | |
| 13 | Base cojinete | 1 | 202719900606 | |
| 14 | Ventilador | 1 | 201100200306 | CL92554 |
| 15 | Lama horizontal | 1 | 201132591044 | |
| 16 | Chasis | 1 | 201132591057 | |
| 16.1 | Motor lamas | 1 | 202400200031 | CL92548 |
| 17 | Tapa | 1 | 201119900949 | |
| 18 | Placa montaje | 1 | 2012325A0010 | |
| 19 | Conjunto box eléctrico | 1 | 203332391165 | CL92549 |
| 19.1 | Cubierta 1 box eléctrico | 1 | 201132490125 | |
| 19.2 | Cubierta 2 box eléctrico | 1 | 201132490139 | |
| 19.3 | Placa eléctronica principal | 1 | 201332391737 | CL92550 |
| 19.4 | Sonda ambiente (T1) | 1 | 202432390005 | CL92551 |
| 19.5 | Sonda batería (T2) | 1 | 202301300426 | CL92552 |
| 19.6 | Regleta conexiones | 1 | 202301450119 | |
| 20 | Tapa box eléctrico | 1 | 201132490126 | |
| 21 | Control remoto | 1 | 2033550A5736 | |
| 22 | Junta drenaje | 1 | 202720090001 | CL92477 |
| 23 | Pipeta drenaje | 1 | 201101020011 | CL92476 |
| 24 | Filtro aire fresco | 1 | 201131410703 | |
| 25 | Filtro aire (izquierdo) | 1 | 201132591042 | |
| 26 | Filtro aire (derecho) | 1 | 201132591040 | |

## MUPR-12-H4
UI20806

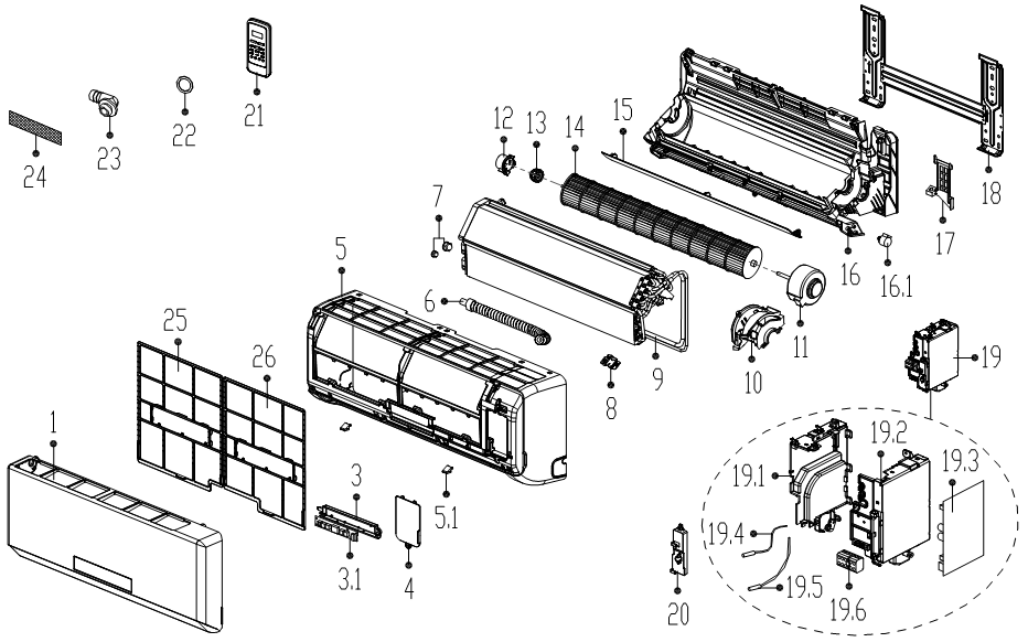


| Nº | Descripción | Ud. | Ref. Proveedor | Código |
|---|---|---|---|---|
| 1 | Panel frontal | 1 | 2011325A4854 | |
| 3 | Conjunto display | 1 | 2033323A1794 | CL92553 |
| 3.1 | Placa display | 1 | 2013323A1406 | CL92547 |
| 4 | Tapa conexiones | 1 | 201119901024 | |
| 5 | Carcasa | 1 | 201132591041 | |
| 5.1 | Tapa tornillos | 2 | 201119900950 | |
| 6 | Tubo drenaje | 1 | 201101020038 | |
| 7 | Tuerca tubería 5/8"-18UNF | 1 | 201600330002 | |
| 7 | Tuerca tubería 7/16"-20UNF | 1 | 201600330001 | |
| 8 | Fijación de la abrazadera del sensor de temperatura | 1 | 201102000305 | |
| 9 | Intercambiador | 1 | 201532390220 | |
| 10 | Cubierta motor ventilador | 1 | 201132490127 | |
| 11 | Motor ventilador RPG20E | 1 | 202400400213 | CL92442 |
| 12 | Cojinete | 1 | 201119900952 | |
| 13 | Base cojinete | 1 | 202719900606 | |
| 14 | Ventilador | 1 | 201100200306 | CL92554 |
| 15 | Lama horizontal | 1 | 201132591044 | |
| 16 | Chasis | 1 | 201132591057 | |
| 16.1 | Motor lamas | 1 | 202400200031 | CL92548 |
| 17 | Tapa | 1 | 201119900949 | |
| 18 | Placa montaje | 1 | 2012325A0010 | |
| 19 | Conjunto box eléctrico | 1 | 203332490302 | CL92555 |
| 19.1 | Cubierta 1 box eléctrico | 1 | 201132490125 | |
| 19.2 | Cubierta 2 box eléctrico | 1 | 201132490139 | |
| 19.3 | Placa eléctronica principal | 1 | 201332490351 | CL92556 |
| 19.4 | Sonda ambiente (T1) | 1 | 202432390005 | CL92551 |
| 19.5 | Sonda batería (T2) | 1 | 202301300426 | CL92552 |
| 19.6 | Regleta conexiones | 1 | 202301450119 | |
| 20 | Tapa box eléctrico | 1 | 201132490126 | |
| 21 | Control remoto | 1 | 2033550A5736 | |
| 22 | Junta drenaje | 1 | 202720090001 | CL92477 |
| 23 | Pipeta drenaje | 1 | 201101020011 | CL92476 |
| 24 | Filtro aire fresco | 1 | 201131410703 | |
| 25 | Filtro aire (izquierdo) | 1 | 201132591042 | |
| 26 | Filtro aire (derecho) | 1 | 201132591040 | |

## MUPR-18-H4
UI20807

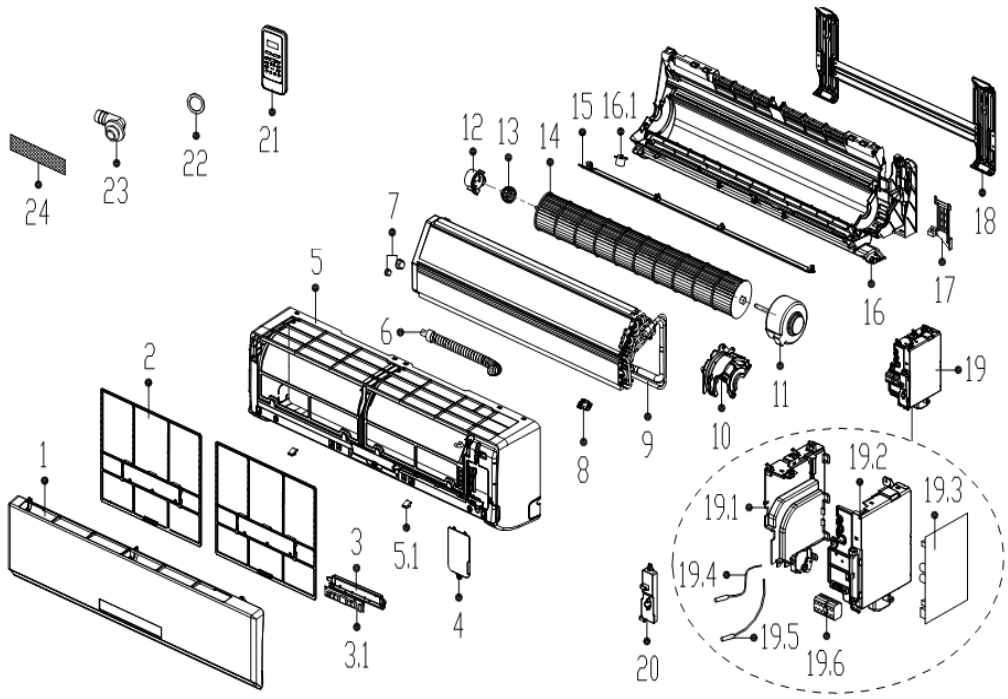


| Nº | Descripción | Ud. | Ref. Proveedor | Código |
|---|---|---|---|---|
| 1 | Panel frontal | 1 | 2011327A4577 | |
| 2 | Filtro aire | 2 | 201132790664 | |
| 3 | Conjunto display | 1 | 2033323A1795 | CL92557 |
| 3.1 | Placa display | 1 | 2013323A1406 | CL92547 |
| 4 | Tapa conexiones | 1 | 201119901024 | |
| 5 | Carcasa | 1 | 201132790667 | |
| 5.1 | Tapa tornillos | 2 | 201119900950 | |
| 6 | Tubo drenaje | 1 | 201101020038 | |
| 7 | Tuerca tubería 3/4"-16UNF | 1 | 201600330003 | |
| 7 | Tuerca tubería 7/16"-20UNF | 1 | 201600330001 | |
| 8 | Fijación de la abrazadera del sensor de temperatura | 1 | 201102000305 | |
| 9 | Intercambiador | 1 | 201532890167 | |
| 10 | Cubierta motor ventilador | 1 | 201132790663 | |
| 11 | Motor ventilador WZDK30-38G | 1 | 202400300517 | CL92558 |
| 12 | Cojinete | 1 | 201119900952 | |
| 13 | Base cojinete | 1 | 202719900606 | |
| 14 | Ventilador | 1 | 201100200322 | CL92559 |
| 15 | Lama horizontal | 1 | 201132790665 | |
| 16 | Chasis | 1 | 201132790680 | |
| 16.1 | Motor lamas | 1 | 202400200031 | CL92548 |
| 17 | Tapa | 1 | 201119900949 | |
| 18 | Placa montaje | 1 | 2012327A0002 | |
| 19 | Conjunto box eléctrico | 1 | 203332890669 | CL92560 |
| 19.1 | Cubierta 1 box eléctrico | 1 | 201132490125 | |
| 19.2 | Cubierta 2 box eléctrico | 1 | 201132490139 | |
| 19.3 | Placa eléctronica principal | 1 | 201332890759 | CL92561 |
| 19.4 | Sonda ambiente (T1) | 1 | 202433190000 | CL92457 |
| 19.5 | Sonda batería (T2) | 1 | 202301300426 | CL92552 |
| 19.6 | Regleta conexiones | 1 | 202301450119 | |
| 20 | Tapa box eléctrico | 1 | 201132490126 | |
| 21 | Control remoto | 1 | 2033550A5736 | |
| 22 | Junta drenaje | 1 | 202720090001 | CL92477 |
| 23 | Pipeta drenaje | 1 | 201101020011 | CL92476 |
| 24 | Filtro aire fresco | 1 | 201131410703 | |

## MUPR-24-H4
UI20808

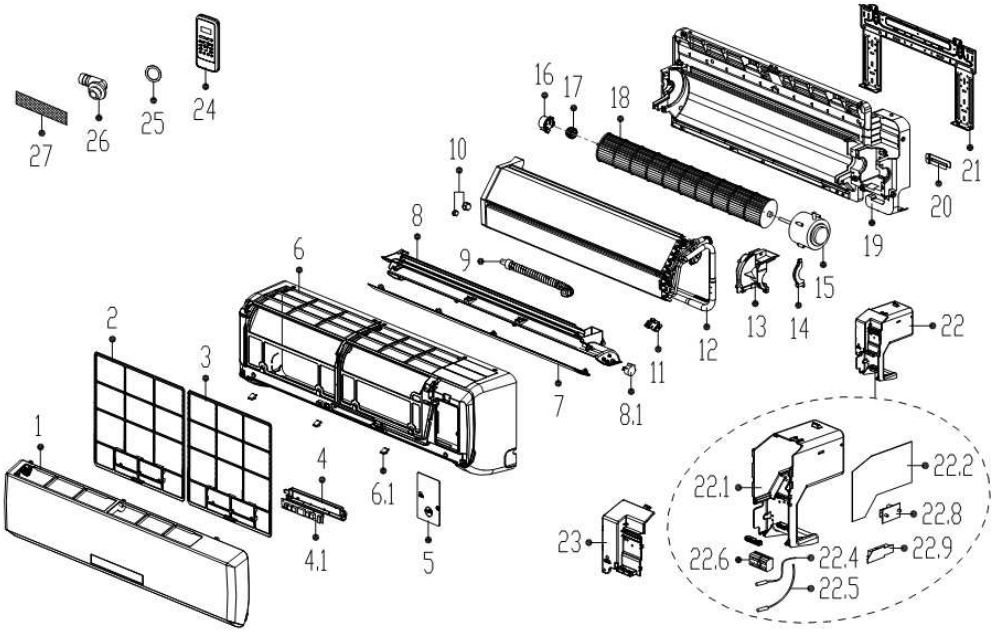


| Nº | Descripción | Ud. | Ref. Proveedor | Código |
|---|---|---|---|---|
| 1 | Panel frontal | 1 | 2011330A5729 | |
| 2 | Filtro aire (izquierdo) | 1 | 201133091044 | |
| 3 | Filtro aire (derecho) | 1 | 201133091043 | |
| 4 | Conjunto display | 1 | 2033323A1795 | CL92562 |
| 4.1 | Placa display | 1 | 2013323A1406 | CL92547 |
| 5 | Tapa conexiones | 1 | 201133091048 | |
| 6 | Carcasa | 1 | 201133091041 | |
| 6.1 | Tapa tornillos | 3 | 201119900950 | |
| 7 | Lama horizontal | 1 | 201133090987 | |
| 8 | Conjunto bandeja condensados | 1 | 201133091126 | |
| 8.1 | Motor lamas | 1 | 202400200120 | CL92568 |
| 9 | Tubo drenaje | 1 | 201101020038 | |
| 10 | Tuerca tubería 7/8"-14UNF | 1 | 201600330004 | |
| 10 | Tuerca tubería 5/8"-18UNF | 1 | 201600330002 | |
| 11 | Fijación de la abrazadera del sensor de temperatura | 1 | 201102000305 | |
| 12 | Intercambiador | 1 | 201533090140 | |
| 13 | Cubierta motor ventilador | 1 | 201133090980 | |
| 14 | Fujacion motor ventilador | 1 | 201133090167 | |
| 15 | Motor ventilador WZDK30-38G | 1 | 202400401622 | CL92563 |
| 16 | Cojinete | 1 | 201119900952 | |
| 17 | Base cojinete | 1 | 202719900606 | |
| 18 | Ventilador | 1 | 201100200053 | CL92564 |
| 19 | Chasis | 1 | 201133091040 | |
| 20 | Tapa | 1 | 201232800103 | |
| 21 | Placa montaje | 1 | 201232590038 | |
| 22 | Conjunto box eléctrico | 1 | 203332990385 | CL92565 |
| 22.1 | Cubierta 1 box eléctrico | 1 | 201133091038 | |
| 22.2 | Placa eléctronica principal | 1 | 201332990389 | CL92566 |
| 22.4 | Sonda ambiente (T1) | 1 | 202301300210 | CL92466 |
| 22.5 | Sonda batería (T2) | 1 | 202301300077 | CL92569 |
| 22.6 | Regleta conexiones | 1 | 202301450119 | |
| 22.8 | Placa relés | 1 | 201333090408 | CL92570 |
| 22.9 | Soporte placa relés | 1 | 201319901004 | |
| 23 | Tapa box eléctrico | 1 | 201133091042 | |
| 24 | Control remoto | 1 | 2033550A5736 | |
| 25 | Junta drenaje | 1 | 202720090001 | CL92477 |
| 26 | Pipeta drenaje | 1 | 201101020011 | CL92476 |
| 27 | Filtro aire | 1 | 201131410703 | |

## MUPR-09-H4
**UE20805**

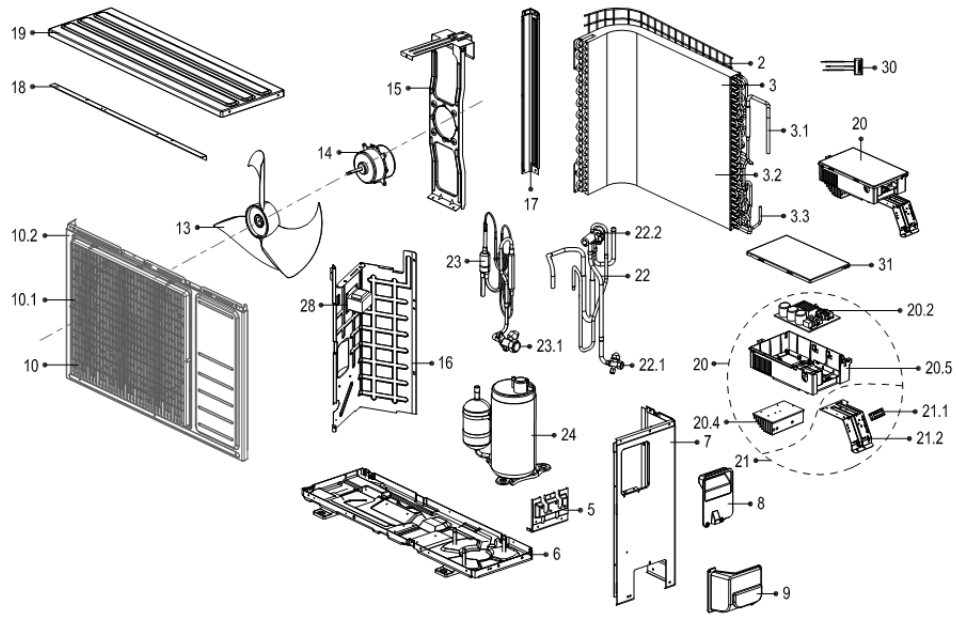


| Nº | Descripción | Ud. | Ref. Proveedor | Código |
|---|---|---|---|---|
| 2 | Red trasera | 1 | 2011376G0001 | |
| 3 | Intercambiador completo | 1 | 201537591110 | |
| 3.1 | Conjunto del tubo de entrada | 1 | 201637400781 | |
| 3.2 | Intercambiador (solo) | 1 | 201535260671 | |
| 3.3 | Tubería de salida | 1 | 201648890033 | |
| 5 | Tapa de las válvulas | 1 | 201237300316 | |
| 6 | Base | 1 | 201237490041 | |
| 7 | Tapa lateral derecha | 1 | 201237390082 | |
| 8 | Tapa conexiones | 1 | 201148100123 | |
| 9 | Tapa de válvulas | 1 | 201137390017 | |
| 10 | Panel frontal completo | 1 | 201237400429 | |
| 10.1 | Rejilla frontal | 1 | 201137590017 | |
| 10.2 | Panel frontal | 1 | 201237400407 | |
| 13 | Ventilador axial | 1 | 201100390002 | CL92459 |
| 14 | Motor ventilador WZDK36-38G-W | 1 | 202400300536 | CL92571 |
| 15 | Soporte motor ventilador | 1 | 201237400049 | |
| 16 | Placa partición interior | 1 | 201237400423 | |
| 17 | Soporte lateral izquerdo trasero | 1 | 201237400397 | |
| 18 | Soporte motor ventilador (superior) | 1 | 201237400055 | |
| 19 | Tapa superior | 1 | 201237400412 | |
| 20 | Conjunto box eléctrico | 1 | 203337390261 | CL92572 |
| 20.2 | Placa electrónica principal | 1 | 201337390235 | CL92573 |
| 20.4 | Radiador termico | 1 | 202301901117 | |
| 20.5 | Soporte box eléctrico | 1 | 201137490028 | |
| 21 | Placa de terminales completa | 1 | 203337490055 | |
| 21.1 | Bornero conexiones | 1 | 202301400377 | |
| 21.2 | Placa terminales | 1 | 201237490039 | |
| 22 | Válvula 4 vías completa | 1 | 201637391676 | |
| 22.1 | Valvula de gas 3/8" | 1 | 201600720094 | |
| 22.2 | Válvula de 4 vías | 1 | 201600600521 | CL92574 |
| 23 | Válvula de líquido completa | 1 | 201637490760 | |
| 23.1 | Válvula de líquido 1/4" | 1 | 201600700078 | |
| 24 | Compresor ASN108D22UEZ | 1 | 201400611186 | CL92575 |
| 28 | Reactor | 1 | 202301000847 | CL92452 |
| 30 | Conjunto sensores temperatura | 1 | 202301300602 | CL92468 |
| 31 | Cubierta del box eléctrico | 1 | 201137490029 | |

## MUPR-12-H4
**UE20806**

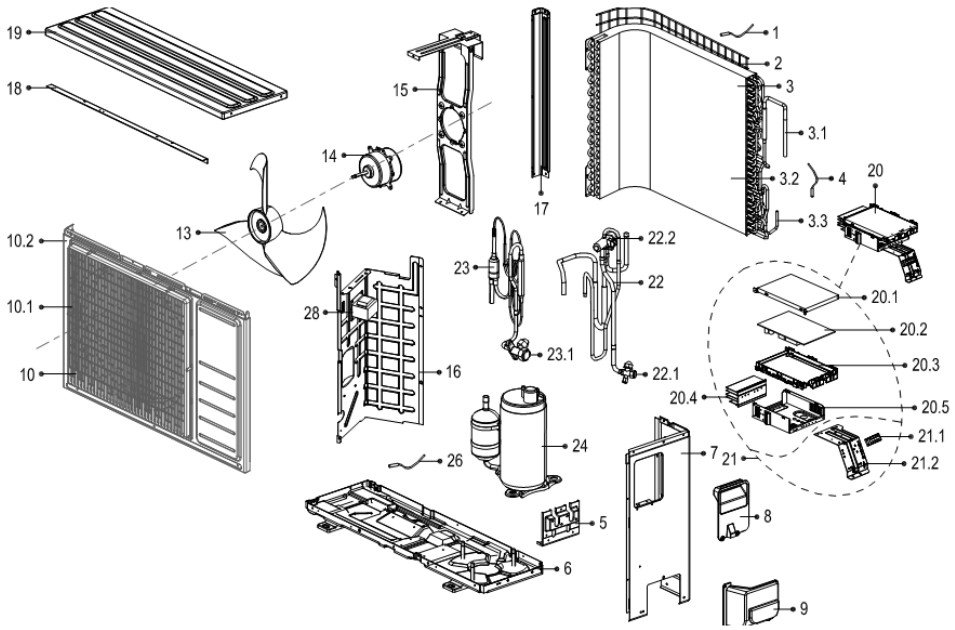


| Nº | Descripción | Ud. | Ref. Proveedor | Código |
|---|---|---|---|---|
| 1 | Sensor temperatura ambiente (T4) | 1 | 202301310075 | CL92471 |
| 2 | Red trasera | 1 | 2011376G0001 | |
| 3 | Intercambiador completo | 1 | 201537591110 | |
| 3.1 | Conjunto del tubo de entrada | 1 | 201637400781 | |
| 3.2 | Intercambiador (solo) | 1 | 201535260671 | |
| 3.3 | Tubería de salida | 1 | 201648890033 | |
| 4 | Sensor temperatura batería (T3) | 1 | 202440500004 | CL92576 |
| 5 | Tapa de las válvulas | 1 | 201237300316 | |
| 6 | Base | 1 | 201237490041 | |
| 7 | Tapa lateral derecha | 1 | 201237390082 | |
| 8 | Tapa conexiones | 1 | 201148100123 | |
| 9 | Tapa de válvulas | 1 | 201137390017 | |
| 10 | Panel frontal completo | 1 | 201237400429 | |
| 10.1 | Rejilla frontal | 1 | 201137590017 | |
| 10.2 | Panel frontal | 1 | 201237400407 | |
| 13 | Ventilador axial | 1 | 201100390002 | CL92459 |
| 14 | Motor ventilador WZDK36-38G-W | 1 | 202400300536 | CL92571 |
| 15 | Soporte motor ventilador | 1 | 201237400049 | |
| 16 | Placa partición interior | 1 | 201237400423 | |
| 17 | Soporte lateral izquerdo trasero | 1 | 201237400397 | |
| 18 | Soporte motor ventilador (superior) | 1 | 201237400055 | |
| 19 | Tapa superior | 1 | 201237400412 | |
| 20 | Conjunto box eléctrico | 1 | 203337590124 | CL92577 |
| 20.1 | Cubierta del box eléctrico | 1 | 201237300162 | |
| 20.2 | Placa electrónica principal | 1 | 201337590100 | CL92578 |
| 20.3 | Soporte box eléctrico | 1 | 201137300162 | |
| 20.4 | Radiador termico | 1 | 202301990015 | |
| 20.5 | Soporte box eléctrico | 1 | 201237300318 | |
| 21 | Placa de terminales completa | 1 | 203337490055 | |
| 21.1 | Bornero conexiones | 1 | 202301400377 | |
| 21.2 | Placa terminales | 1 | 201237490039 | |
| 22 | Válvula 4 vías completa | 1 | 201637391676 | |
| 22.1 | Valvula de gas 3/8" | 1 | 201600720094 | |
| 22.2 | Válvula de 4 vías | 1 | 201600600521 | CL92574 |
| 23 | Válvula de líquido completa | 1 | 201637490760 | |
| 23.1 | Válvula de líquido 1/4" | 1 | 201600700078 | |
| 24 | Compresor ASN108D22UEZ | 1 | 201400611186 | CL92575 |
| 26 | Sensor temperatura descarga (T5) | 1 | 202301310068 | CL92579 |
| 28 | Reactor | 1 | 202301000867 | CL92453 |

## MUPR-18-H4
UE20807

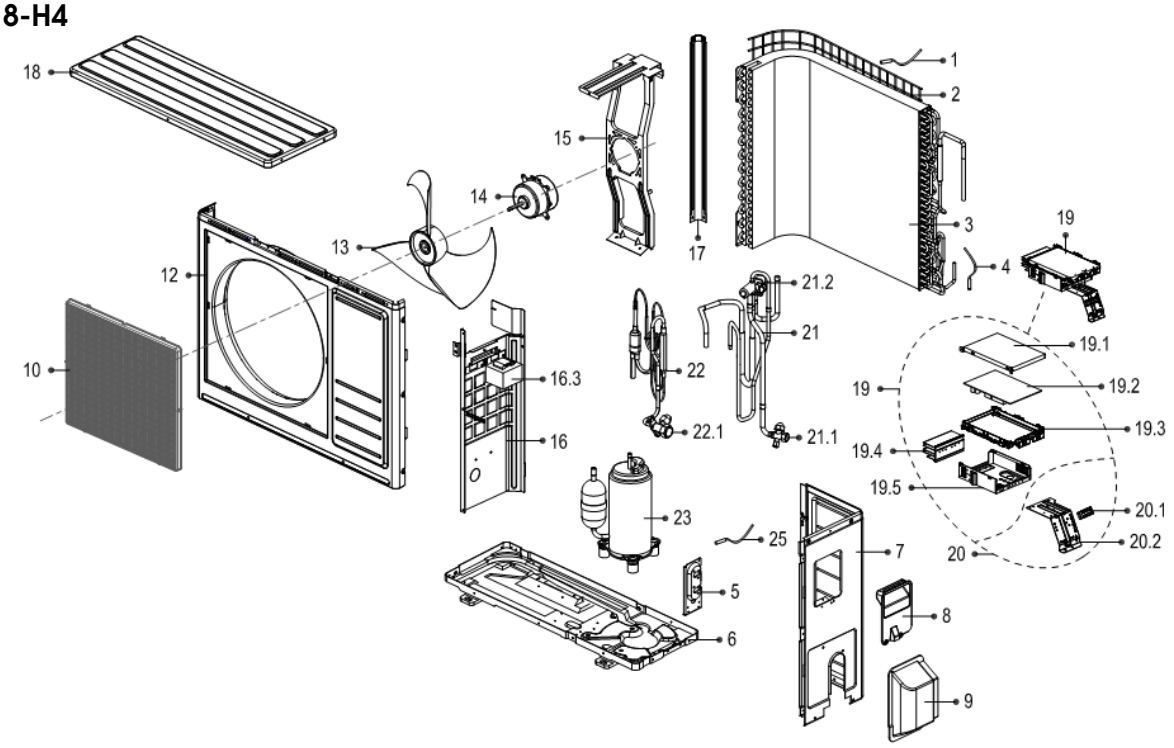


| Nº | Descripción | Ud. | Ref. Proveedor | Código |
|---|---|---|---|---|
| 1 | Sensor temperatura ambiente (T4) | 1 | 202301300115 | |
| 2 | Red trasera | 1 | 2011374G0003 | |
| 3 | Intercambiador completo | 1 | 201537390033 | |
| 4 | Sensor temperatura batería (T3) | 1 | 202440500004 | CL92576 |
| 5 | Tapa de las válvulas | 1 | 201237200299 | |
| 6 | Base | 1 | 201237590104 | |
| 7 | Tapa lateral derecha | 1 | 201237500263 | |
| 8 | Tapa conexiones | 1 | 201148100123 | |
| 9 | Tapa de las válvulas | 1 | 201137400000 | |
| 10 | Rejilla frontal | 1 | 201137590017 | |
| 12 | Panel frontal | 1 | 201237400392 | |
| 13 | Ventilador axial | 1 | 201100390002 | CL92459 |
| 14 | Motor ventilador WZDK36-38G-W | 1 | 202400300536 | CL92571 |
| 15 | Soporte motor ventilador | 1 | 201237390026 | |
| 16 | Placa partición interior | 1 | 201237500242 | |
| 16.3 | Reactor | 1 | 202301000903 | |
| 17 | Soporte lateral izquerdo trasero | 1 | 201237400400 | |
| 18 | Tapa superior | 1 | 201237900028 | |
| 19 | Conjunto box eléctrico | 1 | 203337790154 | CL92580 |
| 19.1 | Cubierta del box eléctrico | 1 | 201237300162 | |
| 19.2 | Placa electrónica principal | 1 | 201337790084 | CL92581 |
| 19.3 | Soporte box eléctrico | 1 | 201137300162 | |
| 19.4 | Radiador termico | 1 | 202301901222 | |
| 19.5 | Instalación box eléctrico | 1 | 201237300318 | |
| 20 | Placa de terminales completa | 1 | 203337790158 | |
| 20.1 | Bornero conexiones | 1 | 202301400377 | |
| 20.2 | Placa terminales | 1 | 201237590046 | |
| 21 | Válvula 4 vías completa | 1 | 201637891258 | |
| 21.1 | Valvula de gas 1/2" | 1 | 201600720195 | |
| 21.2 | Válvula 4 vías | 1 | 201600690011 | CL92582 |
| 22 | Válvula de líquido completa | 1 | 201637891260 | |
| 22.1 | Válvula de líquido 1/4" | 1 | 201600740523 | |
| 23 | Compresor DA130M1C-31FZ | 1 | 201400603269 | CL92432 |
| 25 | Sensor temperatura descarga (T5) | 1 | 202301310068 | CL92579 |

## MUPR-24-H4
UE20808

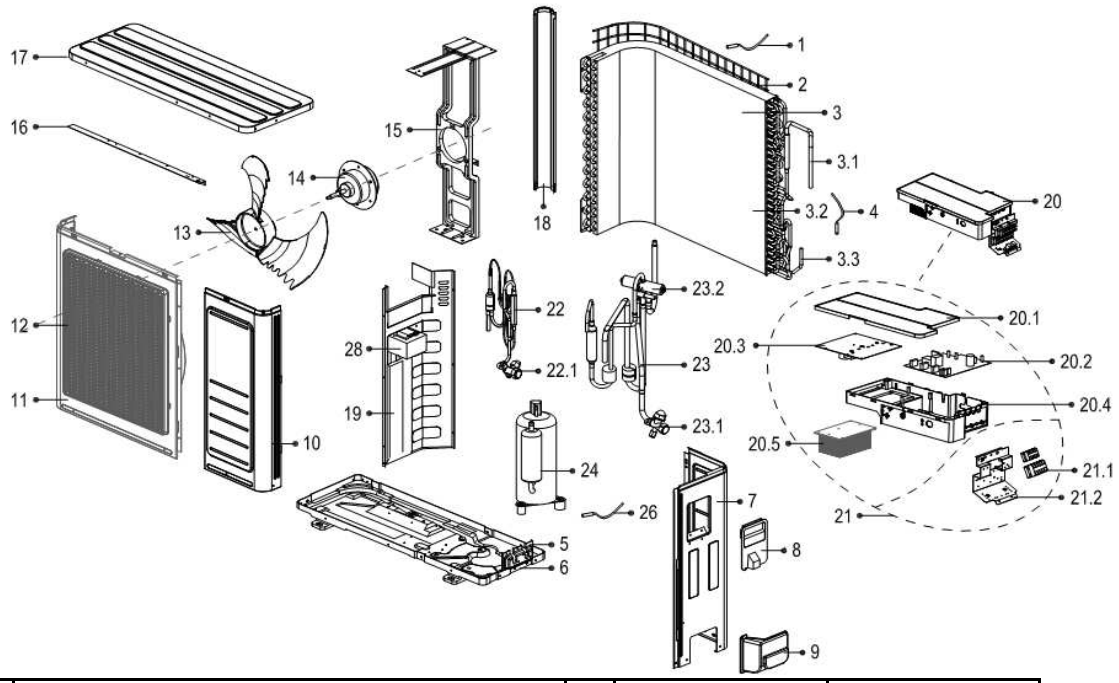


| Nº | Descripción | Ud. | Ref. Proveedor | Código |
|---|---|---|---|---|
| 1 | Sensor temperatura ambiente (T4) | 1 | 202301300115 | |
| 2 | Red trasera | 1 | 2011481G0001 | |
| 3 | Intercambiador completo | 1 | 201537990084 | |
| 3.1 | Conjunto del tubo de entrada | 1 | 201637991011 | |
| 3.2 | Intercambiador (solo) | 1 | 201537990003 | |
| 3.3 | Tubería de salida | 1 | 201637991010 | |
| 4 | Sensor temperatura batería (T3) | 1 | 202440500004 | CL92576 |
| 5 | Tapa de las válvulas | 1 | 201237300316 | |
| 6 | Base | 1 | 201257090054 | |
| 7 | Tapa lateral derecha | 1 | 201237990048 | |
| 8 | Tapa conexiones | 1 | 201157390007 | |
| 9 | Tapa de válvulas | 1 | 201137390017 | |
| 10 | Panel frontal completo | 1 | 201248100389 | |
| 11 | Rejilla frontal | 1 | 201248100390 | |
| 12 | Panel frontal | 1 | 201138090006 | |
| 13 | Ventilador axial | 1 | 201100300553 | CL92584 |
| 14 | Motor ventilador WZDK50-38G | 1 | 202400300535 | CL92585 |
| 15 | Soporte motor ventilador | 1 | 201257090067 | |
| 16 | Soporte motor ventilador (superior) | 1 | 201248100384 | |
| 17 | Tapa superior | 1 | 201248100266 | |
| 18 | Soporte lateral izquerdo trasero | 1 | 201248100367 | |
| 19 | Placa partición interior | 1 | 201257190118 | |
| 20 | Conjunto box eléctrico | 1 | 203338090347 | CL92586 |
| 20.1 | Cubierta del box eléctrico | 1 | 201157190011 | |
| 20.2 | Placa electrónica principal | 1 | 201338090086 | CL92587 |
| 20.3 | Placa IPM | 1 | 201338090092 | CL92588 |
| 20.4 | Soporte box eléctrico | 1 | 201157190010 | |
| 20.5 | Radiador termico | 1 | 202301901173 | |
| 21 | Placa de terminales completa | 1 | 203337990358 | |
| 21.1 | Bornero conexiones | 1 | 202301450155 | |
| 21.2 | Placa terminales | 1 | 201257190117 | |
| 22 | Válvula de líquido completa | 1 | 201638091131 | |
| 22.1 | Válvula de líquido 3/8" | 1 | 201600740704 | |
| 23 | Válvula 4 vías completa | 1 | 201638091130 | |
| 23.1 | Válvula de gas 5/8" | 1 | 201600720296 | |
| 23.2 | Válvula 4 vías | 1 | 201600690011 | CL92582 |
| 24 | Compresor DA150S1C-20FZ | 1 | 201400600530 | CL92583 |
| 26 | Sensor temperatura descarga (T5) | 1 | 202301390002 | CL92078 |
| 28 | Reactor | 1 | 202301000943 | CL92454 |

# INVERTER SERIE H5

## Despiece

# MUPR-H5

## MUPR-09-H5
UI20736

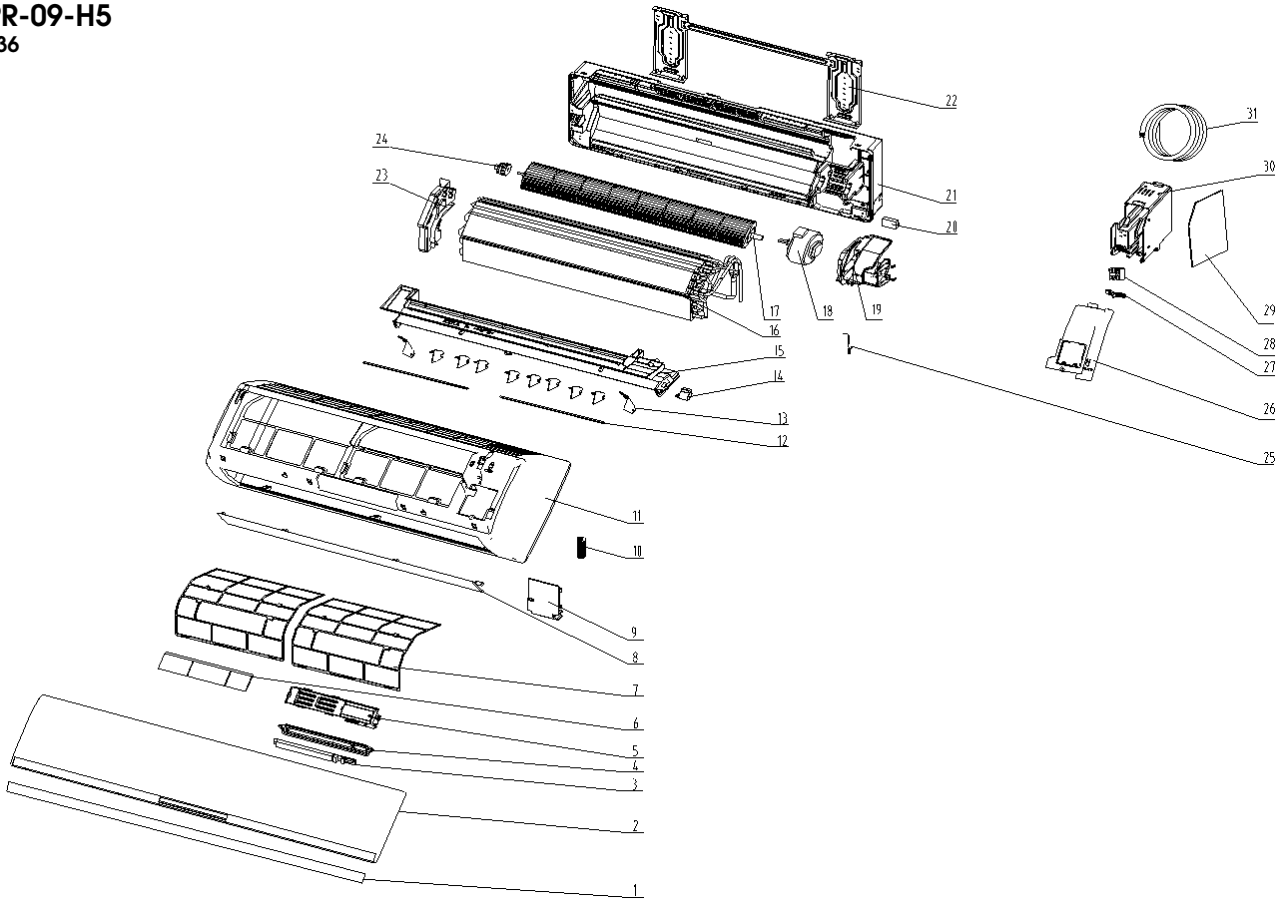


| Nº | Descripción | Ud. | Ref. Proveedor | Código |
|---|---|---|---|---|
| 1 | Decorative strip(optional) | 1 | 11320061000003 | |
| 2 | panel | 1 | 11320003000345 | |
| 3 | display board | 1 | 11222014000066 | CL93768 |
| 4 | display board seating | 1 | 11320033000051 | |
| 5 | plasma dust collector（optional） | 1 | 11222059000001 | |
| 6 | Anti-bacterial filter（optional） | 1 | 11320025000036 | |
| 7 | Filter subassembly | 2 | 11220508000008 | CL93068 |
| 8 | air louver（Horizontal） | 1 | 11220534000008 | |
| 9 | Medium frame wiring cover | 1 | 11320076000009 | |
| 10 | evaporator tubing clamp | 1 | 11320084000010 | |
| 11 | medium frame | 1 | 11320002000015 | |
| 12 | air blade（Vertical）link | 2 | 11320085000054 | |
| 13 | air blade（Vertical） | 2 | 11320017000047 | |
| 13,1 | air blade（Vertical） | 8 | 11320017000033 | |
| 14 | step motor | 1 | 11230002000019 | CL93771 |
| 15 | Air-vent holder | 1 | 11320004000023 | |
| 16 | Evaporator assembly | 1 | 11224003000217 | |
| 17 | cross flow fan | 1 | 11220513000044 | CL93765 |
| 18 | IDU fan motor | 1 | 11230003000056 | CL93772 |
| 19 | motor cover | 1 | 11320052000011 | |
| 20 | anion generator | 1 | 11330016000008 | |
| 21 | chassis | 1 | 11220500000055 | |
| 22 | mounting plate | 1 | 11221500000012 | |
| 23 | evaporator left side carriage | 1 | 11320015000056 | |
| 24 | rubber shaft bearing | 1 | 11320105000002 | |
| 25 | Sensor spring | 1 | 11333013000013 | |
| 26 | control box cover | 1 | 11320058000030 | |
| 27 | cable clamp | 1 | 11320087000013 | |
| 28 | terminal board | 1 | 11330037000020 | |
| 29 | PCB | 1 | 11222009002513 | CL93767 |
| 29,1 | Compressor relay | 1 | 11329008000004 | |
| 29,2 | capacitor | 1 | 11330010000081 | |
| 29,3 | fuse | 1 | 11329058000004 | |
| 29,4 | plug wire of display board | 1 | 11330014000295 | |
| 29,5 | Switching transfomer | 1 | 11329009000004 | |
| 29,6 | SONDA AMBIENTE (AZUL) | 1 | 11329013000027 | CL93774 |
| 29,7 | SONDA TUBERIA (VERDE) | 1 | 11329013000030 | CL93775 |
| 30 | control box | 1 | 11320057000039 | |
| 31 | power cable | 1 | 11320087000013 | |

## MUPR-12-H5
**UI20737**

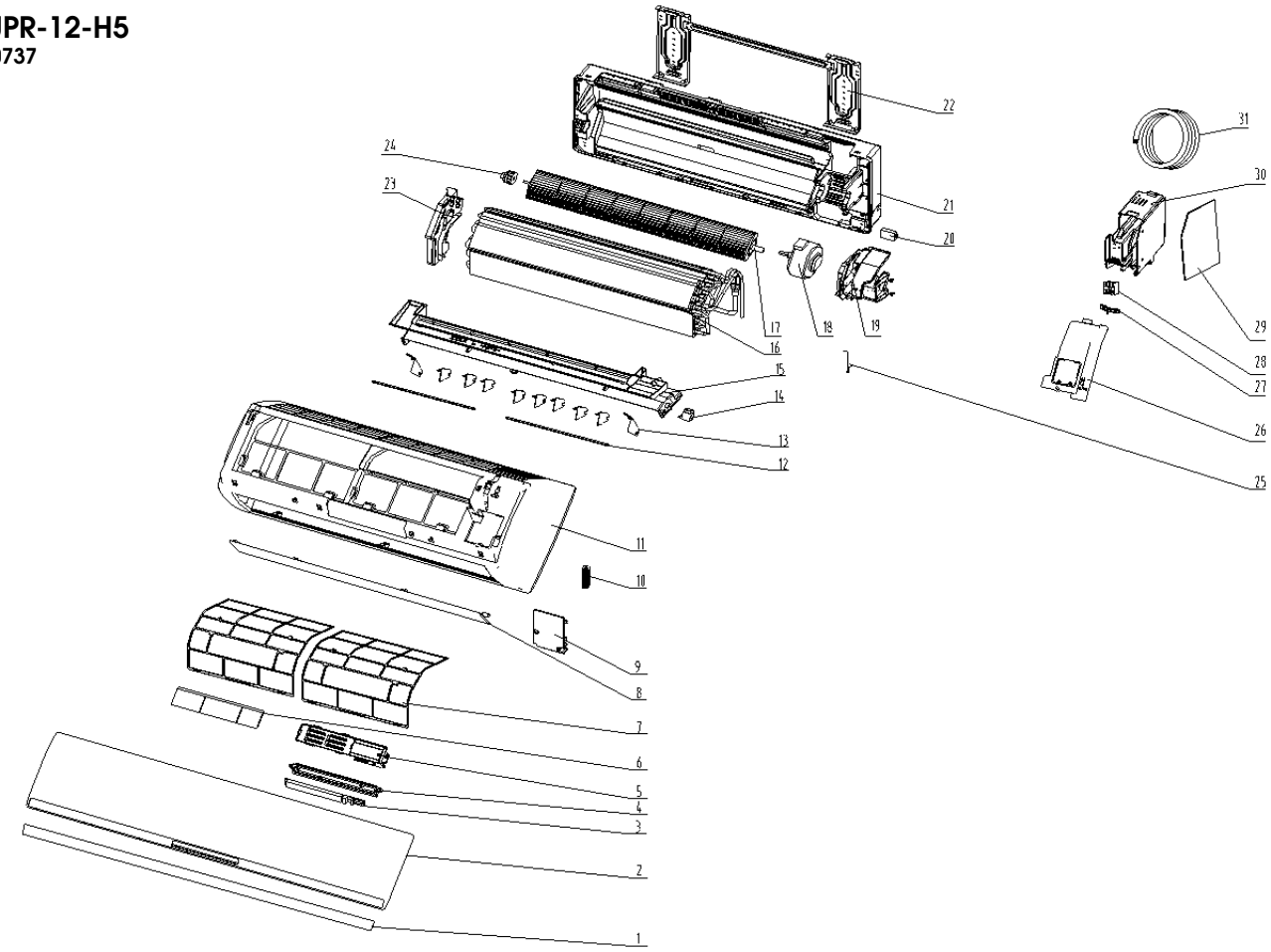


| Nº | Descripción | Ud. | Ref. Proveedor | Código |
|---|---|---|---|---|
| 1 | Decoractive strip(optional) | 1 | 11320061000003 | |
| 2 | panel | 1 | 11320003000345 | |
| 3 | display board | 1 | 11222014000066 | CL93768 |
| 4 | display board seating | 1 | 11320033000051 | |
| 5 | plasma dust collector（optional） | 1 | 11222059000001 | |
| 6 | Anti-bacterial filter（optional） | 1 | 11320025000036 | |
| 7 | Filter subassembly | 2 | 11220508000008 | CL93068 |
| 8 | air louver（Horizontal） | 1 | 11220534000008 | |
| 9 | Medium frame wiring cover | 1 | 11320076000009 | |
| 10 | evaporator tubing clamp | 1 | 11320084000010 | |
| 11 | medium frame | 1 | 11320002000015 | |
| 12 | air blade（Vertical）link | 2 | 11320085000054 | |
| 13 | air blade（Vertical） | 2 | 11320017000047 | |
| 13,1 | air blade（Vertical） | 8 | 11320017000033 | |
| 14 | step motor | 1 | 11230002000019 | CL93771 |
| 15 | Air-vent holder | 1 | 11320004000023 | |
| 16 | Evaporator assembly | 1 | 11224003000228 | |
| 17 | cross flow fan | 1 | 11220513000044 | CL93765 |
| 18 | IDU fan motor | 1 | 11230003000056 | CL93772 |
| 19 | motor cover | 1 | 11320052000011 | |
| 20 | anion generator | 1 | 11330016000008 | |
| 21 | chassis | 1 | 11220500000055 | |
| 22 | mounting plate | 1 | 11221500000012 | |
| 23 | evaporator left side carriage | 1 | 11320015000056 | |
| 24 | rubber shaft bearing | 1 | 11320105000002 | |
| 25 | sensor spring | 1 | 11333013000013 | |
| 26 | control box cover | 1 | 11320058000030 | |
| 27 | cable clamp | 1 | 11320087000013 | |
| 28 | terminal board | 1 | 11330037000020 | |
| 29 | PCB | 1 | 11222009002513 | CL93767 |
| 29,1 | Compressor relay | 1 | 11329008000004 | |
| 29,2 | capacitor | 1 | 11330010000081 | |
| 29,3 | fuse | 1 | 11329058000004 | |
| 29,4 | plug wire of display board | 1 | 11330014000295 | |
| 29,5 | Switching transfomer | 1 | 11329009000004 | |
| 29,6 | SONDA AMBIENTE (AZUL) | 1 | 11329013000027 | CL93774 |
| 29,7 | SONDA TUBERIA (VERDE) | 1 | 11329013000030 | CL93775 |
| 30 | control box | 1 | 11320057000039 | |
| 31 | power cable | 1 | 11320087000013 | |

## MUPR-18-H5
UI20738

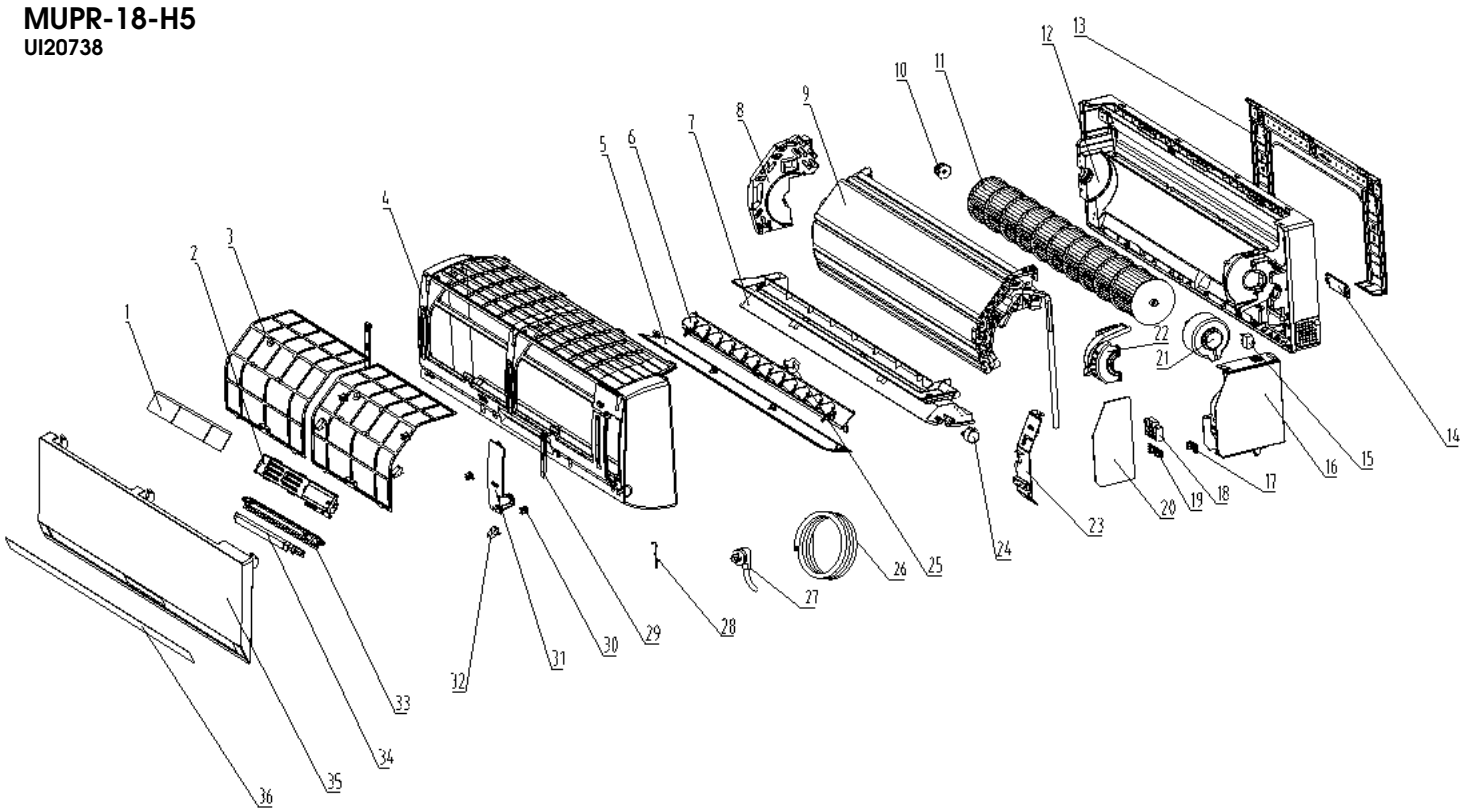


| Nº | Descripción | Ud. | Ref. Proveedor | Código |
|---|---|---|---|---|
| 1 | Anti-bacterial filter（optional） | 1 | 11320025000036 | |
| 2 | plasma dust collector（optional） | 1 | 11222059000001 | |
| 3 | Filter subassembly | 2 | 11220508000049 | CL93763 |
| 4 | medium frame | 1 | 11220501000072 | |
| 5 | air louver（Horizontal） | 1 | 11320005000037 | |
| 6 | Air-vent holder1 | 1 | 11220526000008 | |
| 7 | Air-vent holder2 | 1 | 11220503000055 | |
| 8 | evaporator left side carriage | 1 | 11320015000071 | |
| 9 | Evaporator assembly | 1 | 11224003000278 | |
| 10 | rubber shaft bearing | 1 | 11220551000003 | |
| 11 | cross flow fan | 1 | 11220513000006 | CL93764 |
| 12 | chassis | 1 | 11220500000001 | |
| 13 | mounting plate | 1 | 11221500000001 | |
| 14 | Pipe clamp | 1 | 11320084000008 | |
| 15 | anion generator | 1 | 11330016000005 | |
| 16 | control box | 1 | 11320057000042 | |
| 17 | Clamp | 1 | 11321001000009 | |
| 18 | Terminal board | 1 | 11330037000020 | |
| 19 | wire clamp | 1 | 11321001000025 | |
| 20 | PCB | 1 | 11222009001821 | CL93766 |
| 20,1 | Compressor relay | 1 | 11329008000005 | |
| 20,2 | capacitor | 1 | 11330010000008 | |
| 20,3 | fuse | 1 | 11329058000010 | |
| 20,4 | plug wire of display board | 1 | 11330014000219 | |
| 20,5 | Switching transformer | 1 | 11329009000004 | |
| 20,6 | SONDA AMBIENTE (AZUL) | 1 | 11329013000027 | CL93774 |
| 20,7 | SONDA TUBERIA (VERDE) | 1 | 11329013000030 | CL93775 |
| 21 | IDU Fan motor | 1 | 11230003000061 | CL93773 |
| 22 | motor cover | 1 | 11320052000018 | |
| 23 | control box cover | 1 | 11320058000033 | |
| 24 | step motor1 | 1 | 11230002000017 | CL93770 |
| 25 | step motor2(optional) | 1 | 11230002000024 | |
| 26 | power cable | 1 | 11330021000623 | |
| 27 | power cord | 1 | 11330012000320 | |
| 28 | sensor spring | 1 | 11333013000003 | |
| 29 | studdle | 2 | 11320043000002 | |
| 30 | Panel buckle | 4 | 11320106000004 | |
| 31 | Medium frame wiring cover | 1 | 11320076000034 | |
| 32 | Screw cover | 3 | 11320096000021 | |
| 33 | display board seating | 1 | 11320033000060 | |
| 34 | display board | 1 | 11222023000015 | CL93769 |
| 35 | panel | 1 | 11320003000438 | |
| 36 | Decorative strip(optional) | 1 | 11222023000227 | |

## MUPR-09-H5
**UE20736**

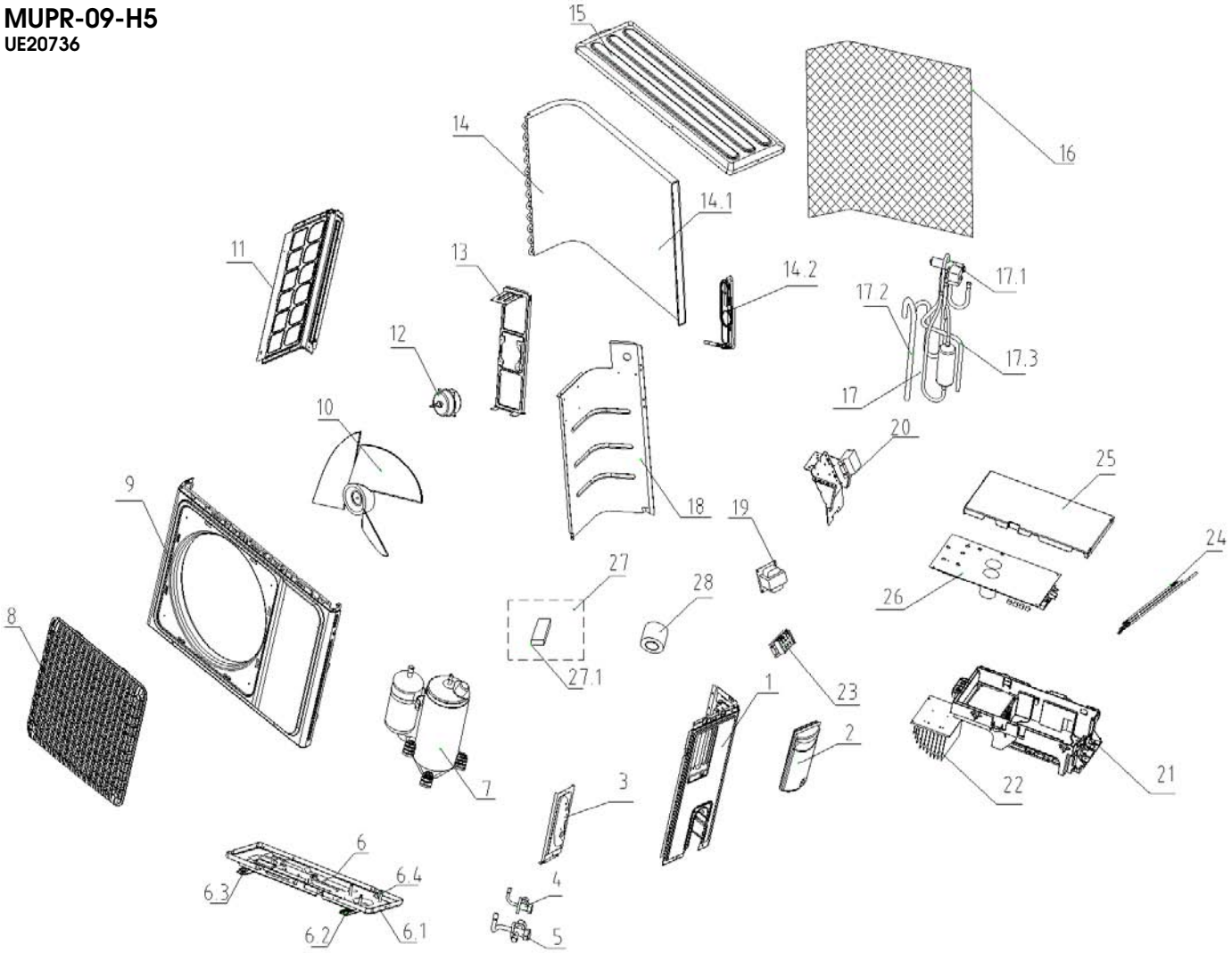


| Nº | Descripción | Ud. | Ref. Proveedor | Código |
|---|---|---|---|---|
| 1 | right side panel | 1 | 11321007000269 | |
| 2 | Electrical cover | 1 | 11320068000009 | |
| 3 | valve plate | 1 | 11321031000027 | |
| 4 | Liquid valve | 1 | 11325042000030 | CL93143 |
| 5 | Gas valve | 1 | 11325042000015 | CL93139 |
| 6 | Chassis assembly | 1 | 11221502000434 | |
| 7 | Compressor assembly | 1 | 11223003000214 | CL93781 |
| 8 | Panel grille | 1 | 11320026000038 | |
| 9 | Front panel | 1 | 11321005000075 | |
| 10 | axial flow fan | 1 | 11320009000049 | CL93787 |
| 11 | left side support plate | 1 | 11321006000108 | |
| 12 | ODU fan motor | 1 | 11230005000002 | CL93784 |
| 13 | motor support | 1 | 11321002000030 | |
| 14 | condenser assembly | 1 | 11224004000996 | |
| 14,2 | Capillary | 1 | 11225506001109 | |
| 15 | top cover | 1 | 11321009000033 | |
| 16 | Back grille | 1 | Steel(Optional) | |
| 17 | 4-way valve | 1 | 11225516000651 | |
| 18 | partition board | 1 | 11321025000048 | |
| 19 | Reactor | 1 | 11330034000008 | |
| 20 | Electrical plate | 1 | 11321015000034 | |
| 21 | Electrical box | 1 | 11320057000060 | |
| 22 | radiator | 1 | 11329031000011 | |
| 23 | terminal board | 1 | 11330037000040 | |
| 24 | SONDA AMBIENTE (AZUL) | 1 | 11329013000007 | CL93789 |
| | SONDA TUBERIA (VERDE) | 1 | 11329013000028 | CL93791 |
| | SONDA DESCARGA (NEGRA) | 1 | 11329013000090 | CL93794 |
| 25 | Electrical box cover | 1 | 11320058000051 | |
| 26 | Main control board | 1 | 11222009002461 | CL93776 |
| 27 | accesories bag | 1 | 11219005000166 | |
| 27,1 | Putty | 1 | 14618079000002 | |
| 28 | Plastic ribbon | 1 | 11320022000016 | |

## MUPR-12-H5
**UE20737**

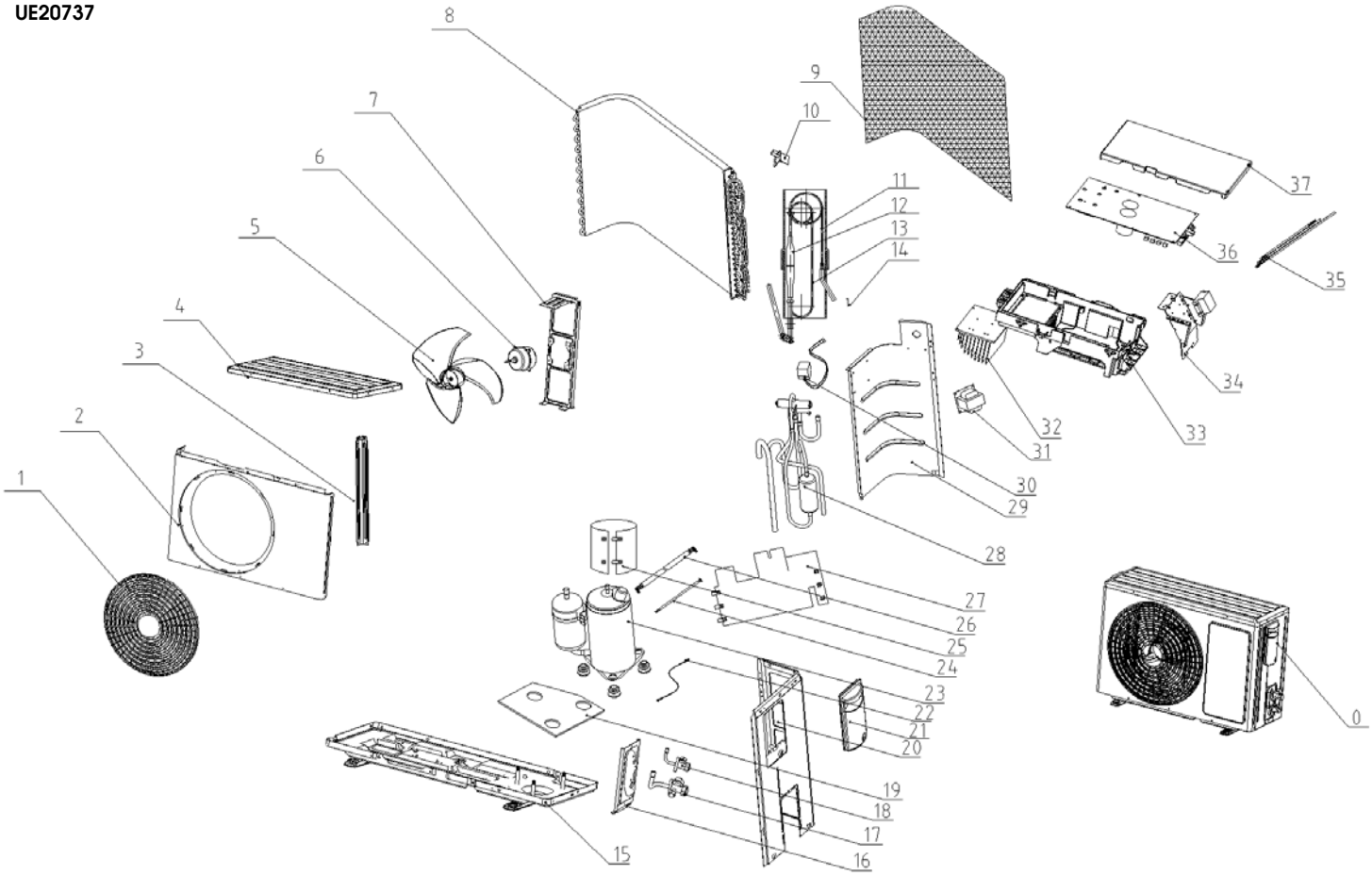


| Nº | Descripción | Ud. | Ref. Proveedor | Código |
|---|---|---|---|---|
| 1 | plastic grille | 1 | 11320026000002 | |
| 2 | Front panel | 1 | 11321005000010 | |
| 3 | left side support plate | 1 | 11321017000020 | |
| 4 | top cover | 1 | 11321009000011 | |
| 5 | axial flow fan | 1 | 11320009000032 | CL93786 |
| 6 | ODU fan motor | 1 | 11230005000002 | CL93784 |
| 7 | motor support | 1 | 11321002000002 | |
| 8 | condenser assembly | 1 | 11224004001005 | |
| 9 | Back grille | 1 | Steel(optional) | |
| 10 | sensor holder | 1 | 11320015000072 | |
| 11 | Cooling capillary | 1 | 11325024000044 | |
| 12 | one-way valve | 1 | 11325010000020 | |
| 13 | heating capillary | 1 | 11325025000024 | |
| 14 | sensor circlip | 1 | 11333013000013 | |
| 15 | Chassis assembly | 1 | 11221502000206 | |
| 16 | valve plate | 1 | 11321031000001 | |
| 17 | Gas valve | 1 | 11225517000006 | CL93113 |
| 18 | Liquid valve | 1 | 11325042000030 | CL93143 |
| 19 | compressor noise-absorption sponge | 1 | 11327002000060 | |
| 20 | right side panel | 1 | 11321007000032 | |
| 21 | E-parts cover | 1 | 11327036000004 | |
| 22 | compressor earth wire | 1 | 11330013000017 | |
| 23 | Compressor assembly | 1 | 11223003000215 | CL93782 |
| 24 | compressor protector wire | 1 | 11330014000577 | |
| 25 | compressor noise-absorption sponge | 1 | 11327002000060 | |
| 26 | compressor wire | 1 | 11330025000002 | |
| 27 | compressor noise-absorption sponge | 1 | 11327002000023 | |
| 28 | 4-way valve assembly | 1 | 11225516000567 | |
| 29 | partition board | 1 | 11321025000045 | |
| 30 | 4-way valve coil | 1 | 11225509000038 | |
| 31 | Reactor | 1 | 11330034000011 | |
| 32 | Radiator | 1 | 11329031000011 | |
| 33 | Electrical box | 1 | 11320057000060 | |
| 34 | Electrical plate | 1 | 11321015000031 | |
| 35,1 | SONDA AMBIENTE (AZUL) | 1 | 11329013000007 | CL93789 |
| | SONDA TUBERIA (VERDE) | 1 | 11329013000028 | CL93791 |
| | SONDA DESCARGA (NEGRA) | 1 | 11329013000090 | CL93794 |
| 36 | Main control board | 1 | 11222009002488 | CL93777 |
| 37 | Electrical box cover | 1 | 11320058000051 | |

## MUPR-18-H5
**UE20738**

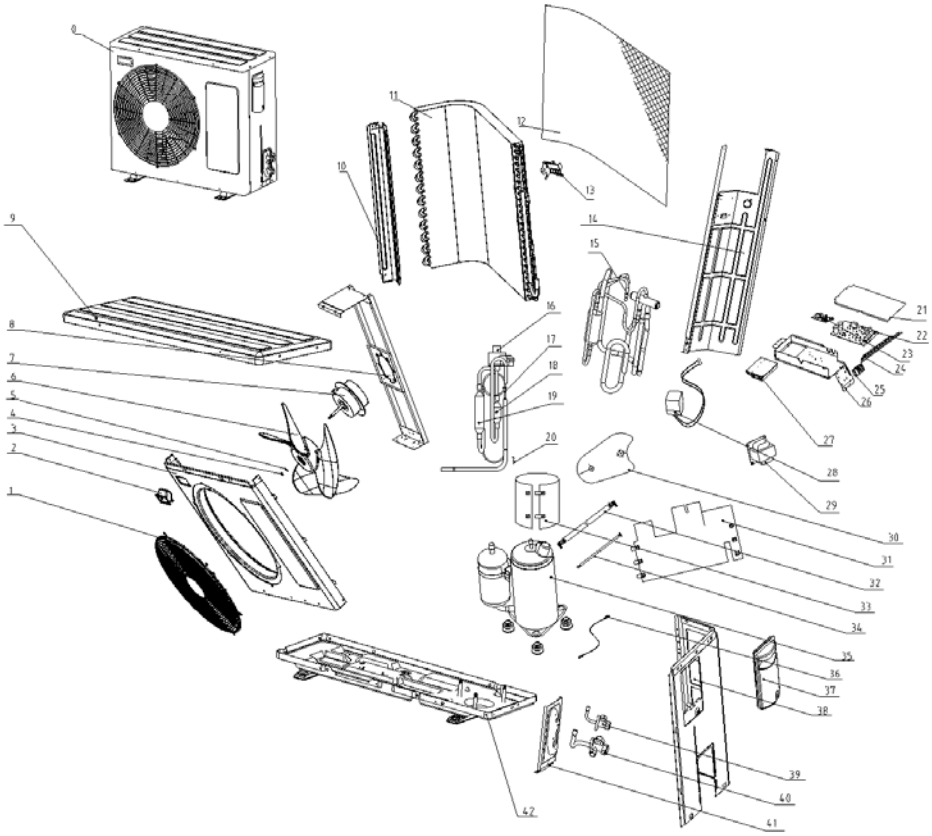

| Nº | Descripción | Ud. | Ref. Proveedor | Código |
|---|---|---|---|---|
| 1 | Panel grille | 1 | 11320026000020 | |
| 2 | holder | 2 | 11320097000001 | |
| 3 | Front Panel | 1 | 11321005000022 | |
| 4 | Hex nut | 1 | 14731012000007 | |
| 5 | Standard spring washer | 1 | 14731021000015 | |
| 6 | axial flow fan | 1 | 11320009000020 | CL93785 |
| 7 | ODU fan motor | 1 | 11230004000263 | CL93783 |
| 8 | motor support | 1 | 11321002000005 | |
| 9 | top cover | 1 | 11321009000009 | |
| 10 | left side support plate | 1 | 11321017000029 | |
| 11 | condenser assembly | 1 | 11224004000099 | |
| 12 | back grille | 1 | Steel(optional) | |
| 13 | Sensor holder | 1 | 11320015000073 | |
| 14 | partition board | 1 | 11321025000010 | |
| 15 | 4-way valve tubing assembly | 1 | 11225516000184 | |
| 16 | EEV | 1 | 11325057000003 | CL93788 |
| 17 | Cooling capillary | 1 | 11325024000115 | |
| 18 | Filter 1 | 1 | 11325514000007 | |
| 19 | Filter 2 | 1 | 11325514000004 | |
| 20 | sensor circlip | 3 | 11333013000003 | |
| 21 | Electrical box cover | 1 | 11321020000002 | |
| 22 | Main control board | 1 | 11222031000340 | CL93778 |
| 22,1 | fan motor capacitor | 1 | 11330010000012 | |
| 22,2 | Capacitor | 2 | 11329003000031 | |
| 22,3 | Fuse 1 | 2 | 11329058000010 | |
| 22,4 | Fuse 2 | 1 | 11329058000001 | |
| 23 | Module board | 1 | 11222040000149 | CL93779 |
| 24 | SONDA AMBIENTE (AZUL) | 1 | 11329013000027 | CL93790 |
| | SONDA TUBERIA (VERDE) | 1 | 11329013000033 | CL93792 |
| | SONDA TUBERIA ASPIRACION (BLANCA) | 1 | 11329013000089 | CL93793 |
| | SONDA DESCARGA (NEGRA) | 1 | 11329013000090 | CL93794 |
| 25 | Terminal board | 1 | 11330037000040 | |
| 26 | Electrical box | 1 | 11221512000003 | |
| 27 | Radiator | 1 | 11329031000020 | |
| 28 | 4-way valve coil | 1 | 11225509000044 | |
| 29 | Reactor | 1 | 11330034000012 | |
| 30 | compressor noise-absorption sponge B | 1 | 11327002000022 | |
| 31 | compressor noise-absorption sponge A | 1 | 11327002000034 | |
| 32 | Compressor wire | 1 | 11330025000009 | |
| 33 | compressor noise-absorption sponge C | 1 | 11327002000033 | |
| 34 | OLP wire | 1 | 11329049000083 | |
| 35 | Compressor assembly | 1 | 11223003000151 | CL93780 |
| 35,1 | shock absorption cushion | 3 | | |
| 35,2 | external protector | 1 | | |
| 35,3 | terminal cover | 1 | | |
| 36 | Compressor earth wire | 1 | 11330013000029 | |
| 37 | E-part cover | 1 | 11320068000009 | |
| 38 | Right side support plate | 1 | 11321007000190 | |
| 39 | Liquid valve | 1 | 11325042000014 | CL93124 |
| 40 | Gas valve | 1 | 11225517000011 | CL93122 |
| 41 | Valve plate | 1 | 11321031000001 | |
| 42 | Chassis assembly | 1 | 11221502000238 | |

# MULTI INVERTER H3

## Despiece

# MUEX-H3
# MUPR-H3M
# MUCSR-H3M
# MUCNR-H3M
# MUSTR-H3M
# MUCR-H3M

## MUEX-18-H3.2 (2015)
CL20810

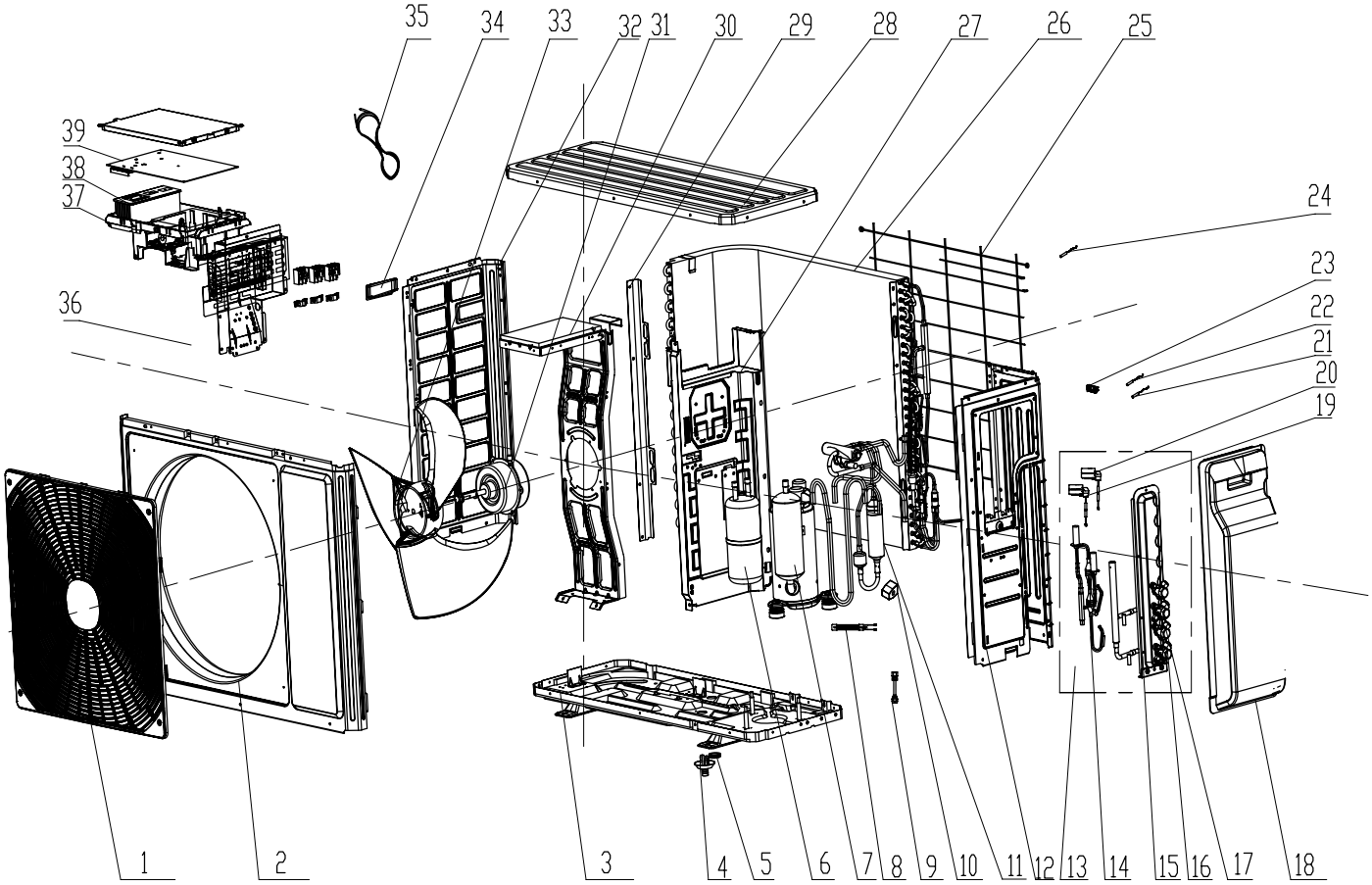

## MUEX-18-H3.2 (2015)
CL20810

| Nº | Descripción | Ud. | Ref. Proveedor | Código |
|---|---|---|---|---|
| 1 | Front Grill | 1 | 22415010 | |
| 2 | Front Panel Assy | 1 | 01533058 | |
| 3 | Chassis Sub-assy | 1 | 02803263P | |
| 4 | Drainage Connecter | 1 | 06123401 | |
| 5 | Drainage hole Cap | 1 | 06813401 | CL96907 |
| 6 | Gas-liquid Separator Assy | 1 | 07225017 | |
| 7 | Compressor and Fittings QXA-B141zF030A | 1 | 00105249G | CL96327 (CL98301) |
| 8 | Electrical Heater | 1 | 7651300403 | |
| 9 | Tube Connector Sub-assy | 0 | none | |
| 10 | Magnet Coil | 1 | 4300040045 | |
| 11 | 4-Way Valve Assy | 1 | 03073156 | |
| 12 | Right Side Plate Assy | 1 | 0130329204 | |
| 13 | Valve Support Assy | 1 | 03016300003 | |
| 14 | Electronic Expansion Valve assy | 1 | 03017400020 | CL98100 |
| 15 | Valve Support Sub-Assy | 1 | 0171312802P | |
| 16 | Cut off Valve | 1 | 071302391 | |
| 17 | Cut off Valve | 1 | 07130239 | |
| 18 | Valve Cover | 1 | 20123029 | |
| 19 | Electric Expand Valve Fitting | 1 | 4300008401 | CL98055 |
| 20 | Electric Expand Valve Fitting | 1 | 43000084 | CL98055 |
| 21 | Temperature Sensor (BLACK) (20K / 20K - 800/1150mm) | 1 | 3900007301 | CL96147 |
| 22 | Temperature Sensor (WHITE) (20K / 20K - 850/1050mm) | 1 | 39000073 | CL96146 |
| 23 | Wiring Clamp | 1 | 26115004 | |
| 24 | Temperature Sensor (20K / 15K /50K - 1200/800/600mm) | 1 | 3900030901 | CL98632 |
| 25 | Rear Grill | 1 | 01473043 | |
| 26 | Condenser Assy | 1 | 01163938 | |
| 27 | Clapboard Assy | 1 | 0123315301 | |
| 28 | Coping | 1 | 01255005P | |
| 29 | Supporting Board(Condenser) | 1 | 01795010 | |
| 30 | Motor Support Sub-Assy | 1 | 01705036 | |
| 31 | Fan Motor LW60M-ZL | 1 | 1501506402 | CL96337 |
| 32 | Left Side Plate | 1 | 01305093P | |
| 33 | Axial Flow Fan | 1 | 10335008 | CL98326 (CL98628) |
| 34 | left handle | 0 | none | |
| 35 | Connecting Cable (3X2.5) | 0 | 4002054026 | |
| 36 | Electric Box Assy | 1 | 02613683 | CL96330 |
| 37 | Electric Box | 1 | 20113027 | |
| 38 | Radiator | 1 | 49010252 | |
| 39 | Main Board | 1 | 30148897 | CL96341 |
| | Filter Board (Placa filtro) | | 30033089 | CL96135 |
| | Drainage hole Cap | | 76713068 | CL96112 |
| | 4-Way Valve | | 430004032 | CL98394 |

## MUEX-24-H3.3 (2015)
CL20811

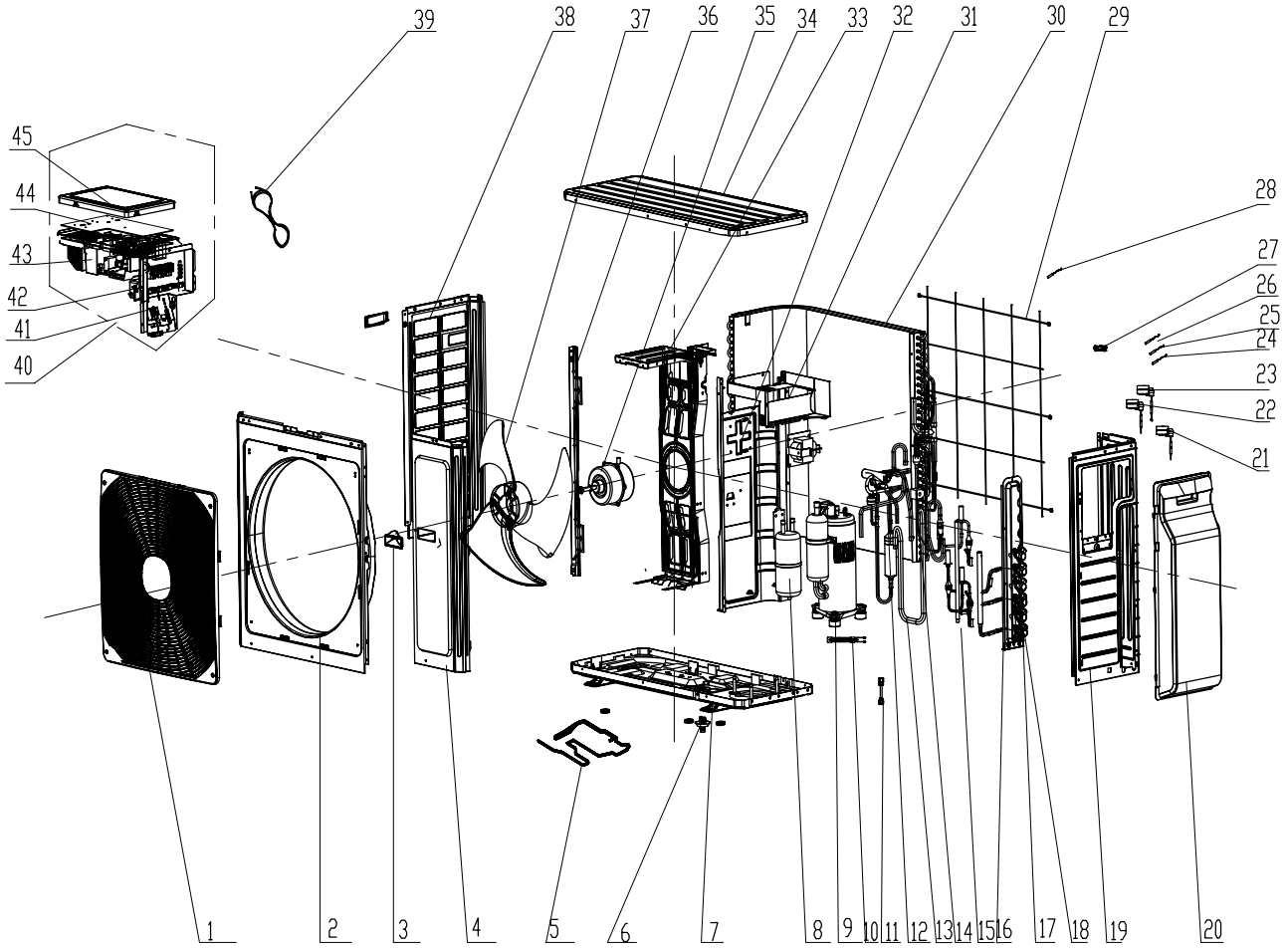

## MUEX-24-H3.3 (2015)
CL20811

| Nº | Descripción | Ud. | Ref. Proveedor | Código |
|---|---|---|---|---|
| 1 | Front Grill | 1 | 22415011 | |
| 2 | Front Panel Assy | 1 | 02200200001 | |
| 3 | Left Handle | 2 | 26235401 | |
| 4 | Front Side Plate | 1 | 01305086P | |
| 5 | Electrical Heater (Chassis) | 1 | 7651000411 | |
| 6 | Drainage Connecter | 1 | 06123401 | |
| 7 | Chassis Sub-assy | 1 | 02803280P | |
| 8 | Gas-liquid Separator Assy | 1 | 07225017 | |
| 9 | Compressor and Fittings | 1 | 0010524501 | CL96328 |
| 10 | Electric Heater(Compressor) | 1 | 7651873215 | |
| 11 | Tube Connector Sub-assy | 2 | 06643008 | |
| 12 | 4-Way Valve Assy | 1 | 03073181 | |
| 13 | Connection Pipe | 1 | 05113723 | |
| 14 | Magnet Coil | 1 | 4300040045 | |
| 15 | Electronic Expansion Valve assy | 1 | 0713395301 | CL98101 |
| 16 | Valve Support Assy | 1 | 0713395401 | |
| 17 | Cut off Valve | 1 | 07130239 | |
| 18 | Cut off Valve | 1 | 071302391 | |
| 19 | Right Side Plate | 1 | 01314100009P | |
| 20 | Valve Cover | 1 | 26904100012 | |
| 21 | Electric Expand Valve Fitting | 1 | 4300008402 | CL98055 |
| 22 | Electric Expand Valve Fitting | 1 | 4300008401 | CL98055 |
| 23 | Electric Expand Valve Fitting | 1 | 43000084 | CL98055 |
| 24 | Temperature Sensor (RED) (20K / 20K-690/820mm) | 1 | 3900007306 | CL96144 |
| 25 | Temperature Sensor (BLACK) (20K/20K-690/1040mm) | 1 | 3900007305 | CL96143 |
| 26 | Temperature Sensor (WHITE) (20K/20K-850/1050mm) | 1 | 39000073 | CL96142 |
| 27 | Wiring Clamp | 1 | 26115004 | |
| 28 | Temperature Sensor | 1 | 3900030901 | CL98632 |
| 29 | Rear Grill | 1 | 01574100003 | |
| 30 | Condenser Assy | 1 | 01163980 | |
| 31 | Electric Box (Fireproofing) | 1 | 01413426 | |
| 32 | Clapboard Sub-Assy | 1 | 01233190 | |
| 33 | Motor Support Sub-Assy | 1 | 01705025 | |
| 34 | Top Cover Sub-Assy | 1 | 01255007 | |
| 35 | Fan Motor LW92K-ZL | 1 | 1501403402 | CL96338 (CL96339) |
| 36 | Condenser Support Plate | 1 | 01175092 | |
| 37 | Axial Flow Fan | 1 | 10335014 | CL98328 |
| 38 | Left Side Plate | 1 | 01305043P | |
| 39 | Connecting Cable | 0 | 4002054026 | |
| 40 | Electric Box Assy | 1 | 02613685 | CL96331 |
| 41 | Terminal Board | 3 | 420111041 | |
| 42 | Connection Support | 1 | 01703211 | |
| 43 | Electric Box | 1 | 20113015 | |
| 44 | Main Board | 1 | 30148905 | CL96342 |
| 45 | Electric Box Cover Sub-Assy | 1 | 02603217 | |
| | Filter board (Placa de filtro) | 1 | 30033074 | CL96191 |

## MUEX-28-H3.4 (2015)
CL20812

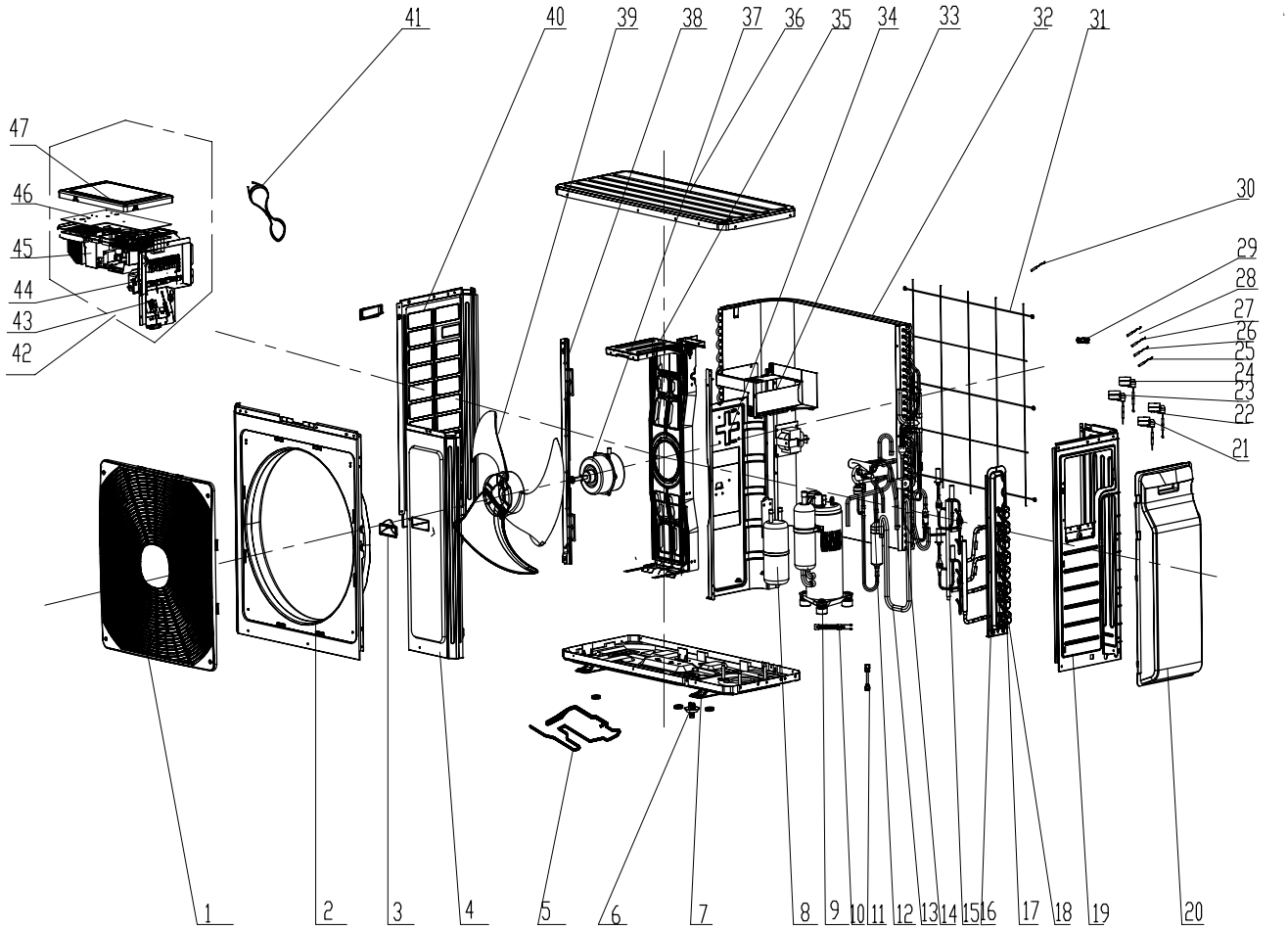

## MUEX-28-H3.4 (2015)
CL20812

| Nº | Descripción | Ud. | Ref. Proveedor | Código |
|---|---|---|---|---|
| 1 | Front Grill | 1 | 22415011 | |
| 2 | Front Panel Assy | 1 | 02200200001 | |
| 3 | Left Handle | 2 | 26235401 | |
| 4 | Front Side Plate | 1 | 01305086P | |
| 5 | Electrical Heater (Chassis) | 1 | 7651000411 | |
| 6 | Drainage Connecter | 1 | 06123401 | |
| 7 | Chassis Sub-assy | 1 | 02803280P | |
| 8 | Gas-liquid Separator Assy | 1 | 07225017 | |
| 9 | Compressor and Fittings | 1 | 0010524501 | CL96328 |
| 10 | Electric Heater(Compressor) | 1 | 7651873215 | |
| 11 | Tube Connector Sub-assy | 2 | 06643008 | |
| 12 | 4-Way Valve Assy | 1 | 03073181 | |
| 13 | Connection Pipe | 1 | 05113723 | |
| 14 | Magnet Coil | 1 | 4300040045 | |
| 15 | Electronic Expansion Valve assy | 1 | 07133953 | CL98102 |
| 16 | Valve Support Assy | 1 | 07133954 | |
| 17 | Cut off Valve | 1 | 07130239 | |
| 18 | Cut off Valve | 1 | 071302391 | |
| 19 | Right Side Plate | 1 | 01314100009P | |
| 20 | Valve Cover | 1 | 26904100012 | |
| 21 | Electric Expand Valve Fitting | 1 | 4300008403 | CL98055 |
| 22 | Electric Expand Valve Fitting | 1 | 4300008402 | CL98055 |
| 23 | Electric Expand Valve Fitting | 1 | 4300008401 | CL98055 |
| 24 | Electric Expand Valve Fitting | 1 | 43000084 | CL98055 |
| 25 | Temperature Sensor (YELLOW) | 1 | 3900007307 | CL96145 |
| 26 | Temperature Sensor (RED) | 1 | 3900007306 | CL96144 |
| 27 | Temperature Sensor (BLACK) | 1 | 3900007305 | CL96143 |
| 28 | Temperature Sensor (WHITE) | 1 | 39000073 | CL96142 |
| 29 | Wiring Clamp | 1 | 26115004 | |
| 30 | Temperature Sensor | 1 | 3900030901 | CL98632 |
| 31 | Rear Grill | 1 | 01574100003 | |
| 32 | Condenser Assy | 1 | 01163980 | |
| 33 | Electric Box (Fireproofing) | 1 | 01413426 | |
| 34 | Clapboard Sub-Assy | 1 | 01233190 | |
| 35 | Motor Support Sub-Assy | 1 | 01705025 | |
| 36 | Top Cover Sub-Assy | 1 | 01255007 | |
| 37 | Fan Motor | 1 | 1501403402 | CL96339 (CL96338) |
| 38 | Condenser Support Plate | 1 | 01175092 | |
| 39 | Axial Flow Fan | 1 | 10335014 | CL98328 |
| 40 | Left Side Plate | 1 | 01305043P | |
| 41 | Connecting Cable | 0 | 4002054026 | |
| 42 | Electric Box Assy | 1 | 02613686 | CL96332 |
| 43 | Terminal Board | 4 | 420111041 | |
| 44 | Connection Support | 1 | 01703211 | |
| 45 | Electric Box | 1 | 20113015 | |
| 46 | Main Board | 1 | 30148906 | CL96343 |
| 47 | Electric Box Cover Sub-Assy | 1 | 02603217 | |
| | Filter board (Placa de filtro) | 1 | 30033074 | CL96191 |

## MUEX-42-H3.5 (2015)
CL20813

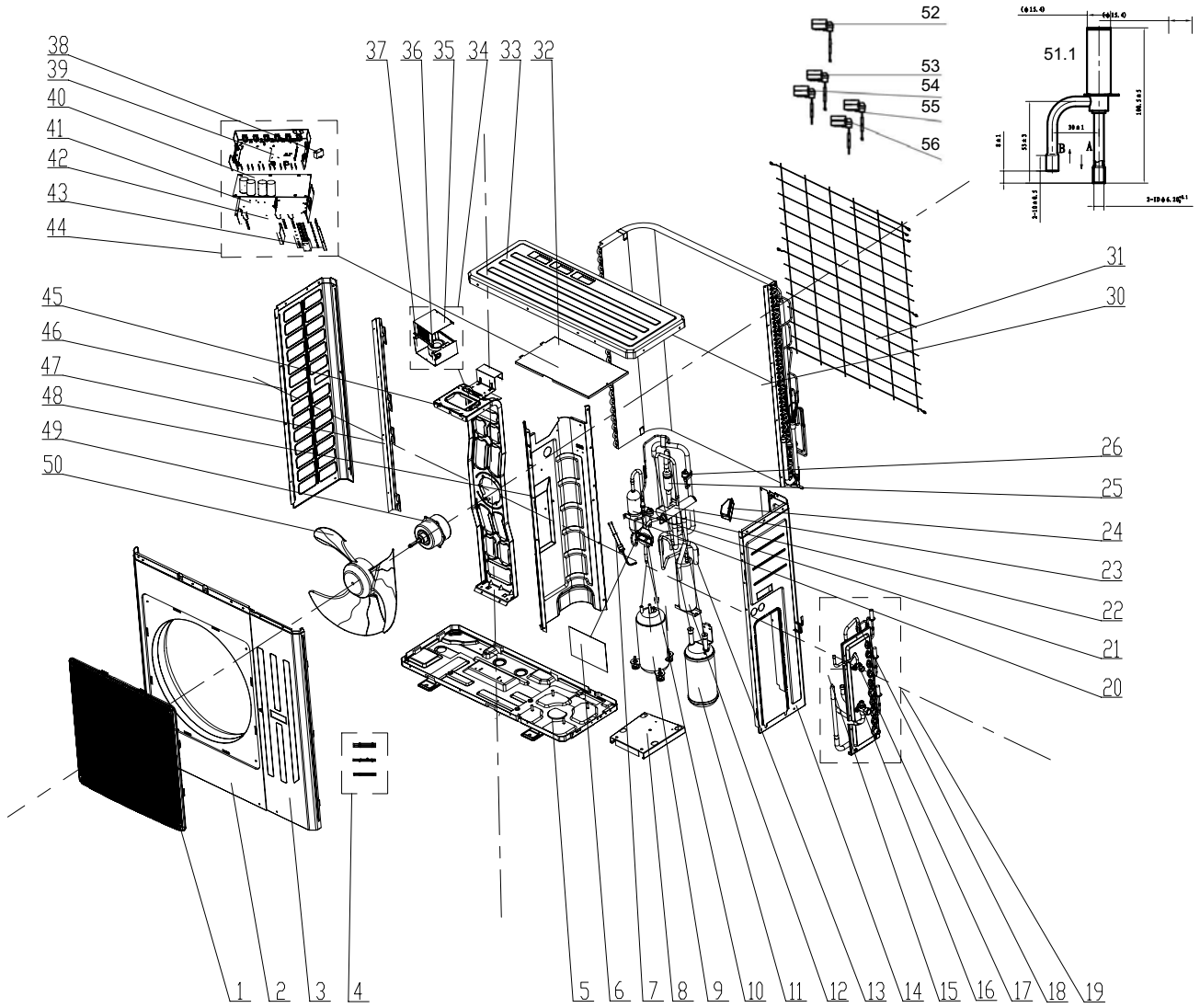

## MUEX-42-H3.5 (2015)
CL20813

| Nº | Descripción | Ud. | Ref. Proveedor | Código |
|---|---|---|---|---|
| 1 | Front Grill | 1 | 26905200121 | |
| 2 | Cabinet | 1 | 01435007P | |
| 3 | Front Side Plate Sub-Assy | 1 | 01305508 | |
| 4 | Sensor sub-assy | 1 | 39008066 | CL96141 |
| 5 | Chassis Sub-assy | 1 | 01194141P | |
| 6 | Insulated Board (Cover of Electric Box) | 1 | 20113003 | |
| 7 | Pressure Protect Switch | 1 | 4602000902 | |
| 8 | Compressor Mounting Plate Sub-Assy | 1 | 01324238P | |
| 9 | Compressor (MITSUBISHI TNB306FPGMC) | 1 | 00205275 | CL91445 |
| 10 | Connection Pipe | 1 | 05034302 | |
| 11 | Gas-liquid Separator Sub-Assy | 1 | 07225018 | |
| 12 | Bidirection Accumulator | 1 | 07228741 | |
| 13 | U -shaped connecting tube | 1 | 05034296 | |
| 14 | Right Side Plate Sub-Assy | 1 | 01314304P | |
| 15 | Strainer | 1 | 07415200002 | |
| 16 | Shut-off valve ( tube connection ) 5/8 (R410a) | 1 | 07334403 | |
| 17 | Shut-off valve ( tube connection ) 3/8 (R410a) | 1 | 07334402 | |
| 18 | Strainer | 1 | 07415200002 | |
| 19 | Valve support assy | 1 | 43044100198 | |
| 19.1 | 43044100199 CONJUNTO COMPLETO 5 EXV | 1 | 43044100199 | CL98080 |
| | 4304413234 CABEZAL EXV (AZUL SALIDA E - 1200MM) | 1 | 4304413234 | CL98097 |
| | 4304413235 CABEZAL EXV (VERDE SALIDA D - 1200MM) | 1 | 4304413235 | CL98096 |
| | 4304413236 CABEZAL EXV (ROJO SALIDA C - 1200MM) | 1 | 4304413236 | CL98095 |
| | 4304413237 CABEZAL EXV (NEGRO SALIDA B - 1450MM) | 1 | 4304413237 | CL98094 |
| | 4304413238 CABEZAL EXV (BLANCO SALIDA A - 1500MM) | 1 | 4304413238 | CL98093 |
| 20 | Oil Separator | 1 | 07228302 | |
| 21 | Tube Clip | 1 | 0214000521 | |
| 22 | Strainer | 1 | 07415200002 | |
| 23 | 4-way Valve | 1 | 43000338 | CL98400 |
| 24 | Handle | 1 | 26235253 | CL96636 |
| 25 | 4-Way Valve Assy | 1 | 04044100014 | |
| 26 | Pressure Protect Switch | 1 | 4602001555 | |
| 27 | Discharge Tube Sub-Assy | 1 | 04634310 | |
| 28 | Inhalation Tube Sub-Assy | 1 | 04674230 | |
| 29 | capillary sub- assy(oil returning) | 1 | 04104239 | |
| 30 | Condenser Assy | 1 | 01124100014 | |
| 31 | Rear Grill | 1 | 01475012 | |
| 32 | Electric Box Cover | 1 | 01424263 | |
| 33 | Top Cover | 1 | 0125500901P | |
| 34 | Electric reactor sub-assy | 1 | 02404111 | |
| 35 | Cover of Reactor box | 1 | 01424260 | |
| 36 | PFC Inductance | 1 | 43128003 | CL98389 |
| 37 | Reactor Box | 1 | 01424258 | |
| 38 | Capacitor CBB61S (7uF/450V) | 1 | 3301074708 | |
| 39 | Electric Box | 1 | 26905211 | |
| 40 | Main Board | 1 | 30226254 | CL96383 |
| 41 | Radiator | 1 | 49018112 | |
| 42 | Electric Box Sub-Assy | 1 | 02404112 | |
| 43 | Terminal Board | 5 | 420111041 | |
| 44 | Electric Box Assy | 1 | 02404130 | CL96333 |

## MUEX-14-H3.2
CL20814

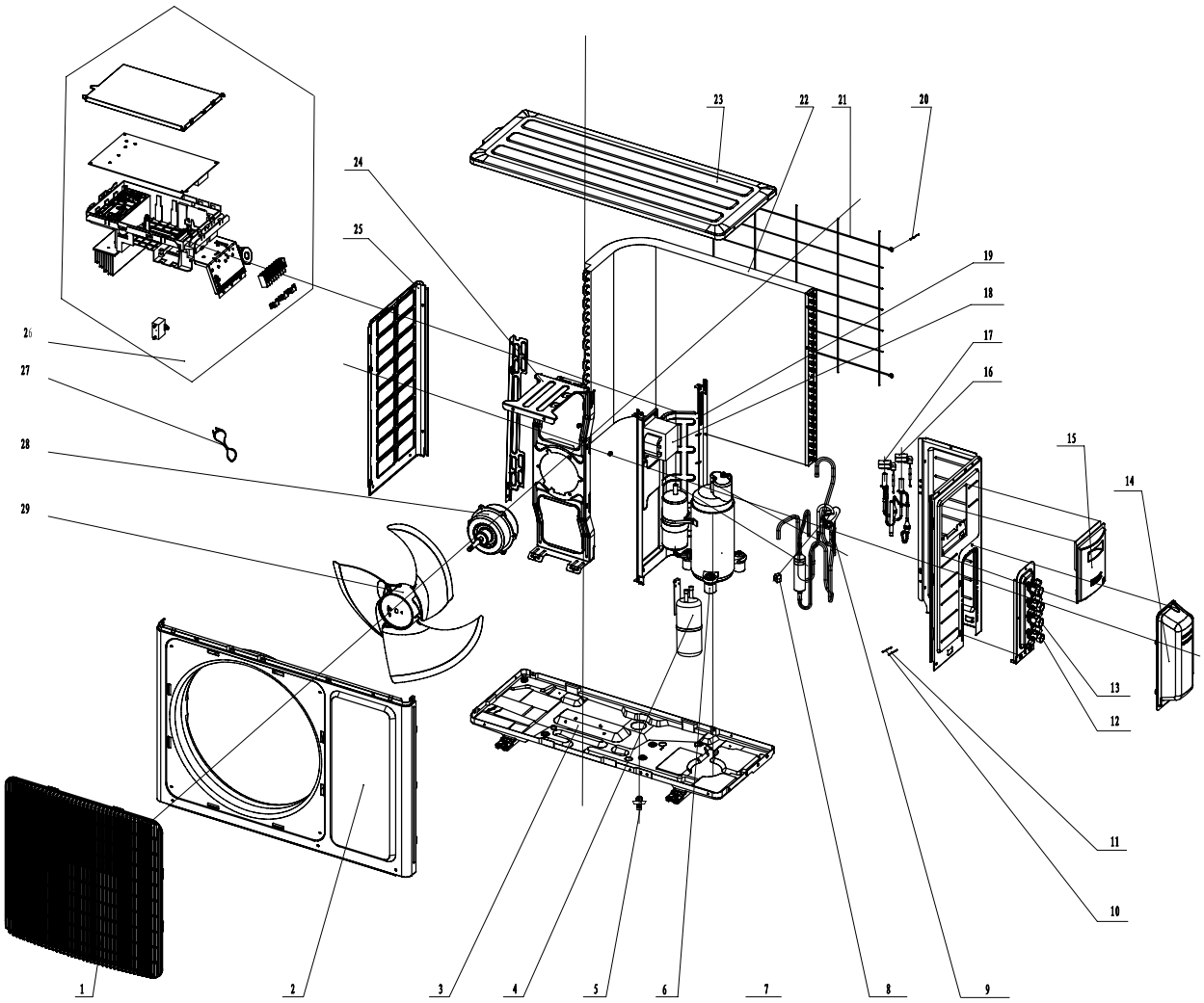

## MUEX-14-H3.2
**CL20814**

| Nº | Descripción | Ud. | Ref. Proveedor | Código |
|---|---|---|---|---|
| 1 | Front Grill | 1 | 22413046 | |
| 2 | Front Panel Assy | 1 | 0153305105 | |
| 3 | Chassis Sub-assy | 1 | 01700000013P | |
| 4 | Gas-liquid Separator | 1 | 07223048 | |
| 5 | Drainage Joint | 1 | 26113009 | |
| 6 | Compressor Gasket | 3 | 76710247 | |
| 7 | Compressor and Fittings | 1 | 00105249G | CL96327 / CL98301 |
| 8 | Magnet Coil | 1 | 4300040045 | |
| 9 | 4-Way Valve Assy | 1 | 03015200041 | |
| 10 | Temperature Sensor | 1 | 3900007301 | CL96147 |
| 11 | Temperature Sensor | 1 | 39000073 | CL96146 |
| 12 | Cut off Valve | 1 | 071302391 | |
| 13 | Cut off Valve | 1 | 07130239 | |
| 14 | Valve Cover | 1 | 22242101 | |
| 15 | Big Handle | 1 | 26233048 | |
| 16 | Electric Expand Valve Fitting | 1 | 4300008401 | CL98055 |
| 17 | Electric Expand Valve Fitting | 1 | 43000084 | CL98055 |
| 18 | PFC Inductance | 1 | 43120132 | |
| 19 | Clapboard Sub-Assy | 1 | 01233206 | |
| 20 | Temperature Sensor | 1 | 3900030901 | CL98632 |
| 21 | Rear Grill | 1 | 01473060 | |
| 22 | Condenser Assy | 1 | 01124309 | |
| 23 | Coping | 1 | 01253034P | |
| 24 | Motor Support Sub-Assy | 1 | 01703238 | |
| 25 | Left Side Plate | 1 | 01303169P | |
| 26 | Electric Box Assy | 1 | 10000201928 | CL96492 |
| 27 | Connecting Cable | 0 | 400205403 | |
| 28 | Fan Motor | 1 | 1501308507<br>1501308505 | CL96215 |
| 29 | Axial Flow Fan | 1 | 10333022 | CL96301 |
| | Electronic Expansion Valve assy (Conjunto EXV) | 1 | 3017400021 | CL98099 |
| | Filter Board | 1 | 30033094 | CL96494 |
| | Main board | 1 | 30138000729 | CL96493 |

**MUPR-07-H3M**
**CL20820**

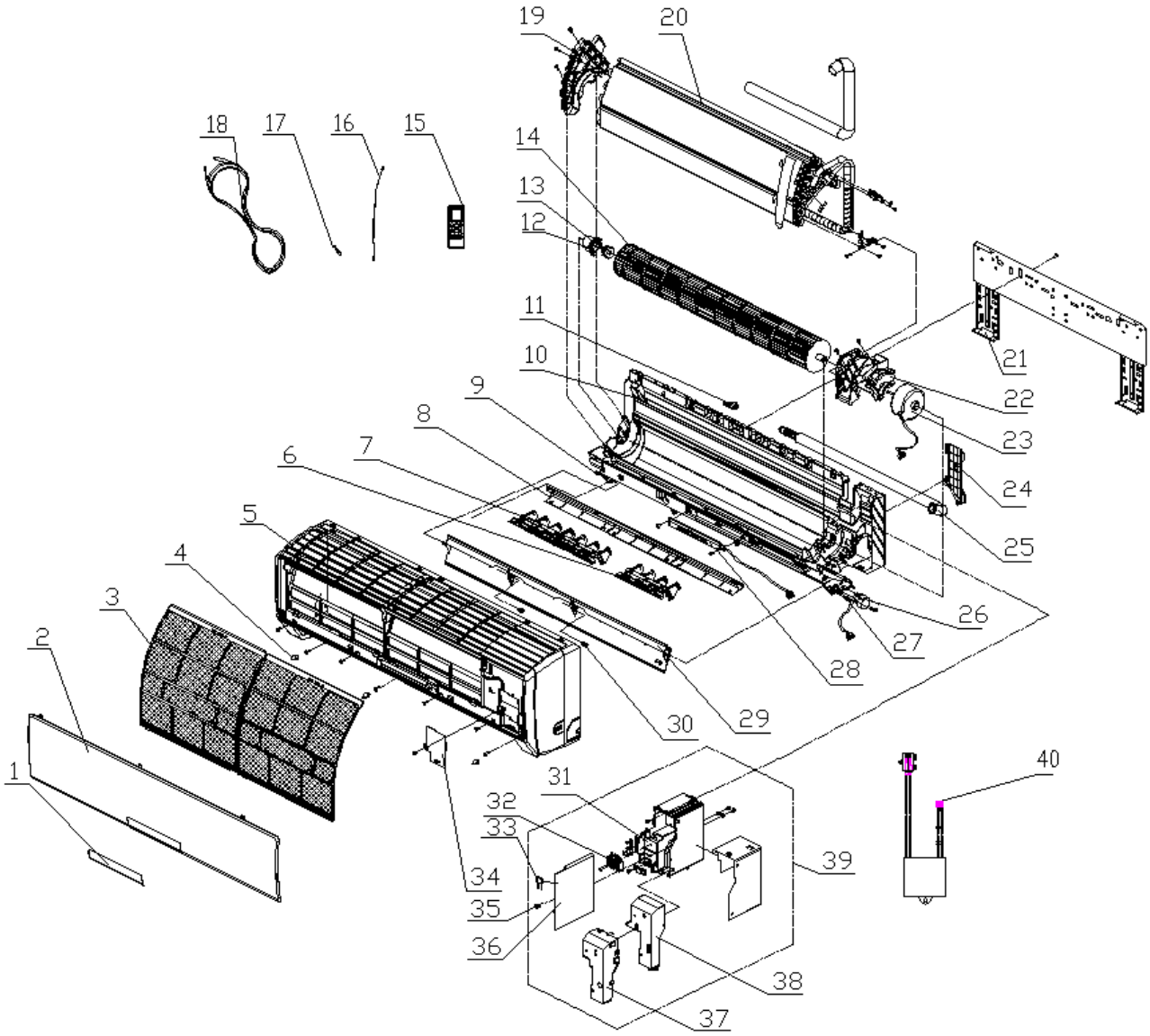

## MUPR-07-H3M
**CL20820**

| Nº | Descripción | Ud. | Ref. Proveedor | Código |
|---|---|---|---|---|
| 1 | Receiver Window | 0 | none | |
| 2 | Front panel assy | 1 | 2001217601 | |
| 3 | Filter Sub-Assy | 2 | 11122081 | |
| 4 | Screw Cover | 3 | 24252016 | |
| 5 | Front Case | 1 | 20012120C | |
| 6 | Swing Louver | 1 | 10512114 | |
| 7 | Air Louver 1 | 1 | 10512113 | |
| 8 | Helicoid tongue | 1 | 26112162 | |
| 9 | Axile Bush | 1 | 10542704 | |
| 10 | Rear Case assy | 1 | 2220210111 | |
| 11 | Water Tray Glue Plug | 1 | 76712012 | |
| 12 | Ring of Bearing | 1 | 26152022 | |
| 13 | O-Gasket sub-assy of Bearing | 1 | 76512051 | |
| 14 | Cross Flow Fan (Turbina ventilador) | 1 | 10352043 | CL96178 |
| 15 | Remote Controller (Control remoto) | 1 | 305100492 | CL98052 |
| 16 | Ambient Temperature Sensor (Sensor de temp. ambiente) | 1 | 390000453 | CL98666 |
| 17 | Temperature Sensor (Sensor de temperatura de tubería) | 1 | 390000599 | CL96179 |
| 18 | Connecting Cable | 0 | 4002052317 | |
| 19 | Evaporator Support | 1 | 24212090 | |
| 20 | Evaporator Assy | 1 | 0100274301 | |
| 21 | Wall-Mounting Frame | 1 | 01252015 | |
| 22 | Motor Press Plate | 1 | 26112160 | |
| 23 | Fan Motor (Motor ventilador) | 1 | 15012115 | CL98658 |
| 24 | Pipe Clamp | 1 | 26112164 | |
| 25 | Drainage hose | 1 | 0523001406 | |
| 26 | Step Motor (Motor lamas) | 1 | 1521212901 | CL96180 |
| 27 | Crank | 1 | 10582070 | |
| 28 | Receiver Board D5183B (Placa receptora) | 1 | 30565012 | CL96181 |
| 29 | Guide Louver1 | 1 | 10512111 | |
| 30 | Axile Bush | 1 | 10542036 | |
| 31 | Electric Box | 1 | 2011216701 | |
| 32 | Terminal Board | 1 | 42011233 | |
| 33 | Capacitor CBB61 | 1 | 33010002 | |
| 34 | Electric Box Cover2 | 1 | 20122075 | |
| 35 | Jumping Connector | 1 | 4202300101 | |
| 36 | Main Board (Placa electrónica) | 1 | 30148874 | CL96682 |
| 37 | Shield cover of Electric Box sub-assy | 1 | 0159207301 | |
| 38 | Electric Box Cover1 | 1 | 22242135 | |
| 39 | Electric Box Assy | 1 | 20402551 | |
| 40 | Cold Plasma Generator | 1 | 1114001602 | |

**MUPR-09-H3M**
CL20821

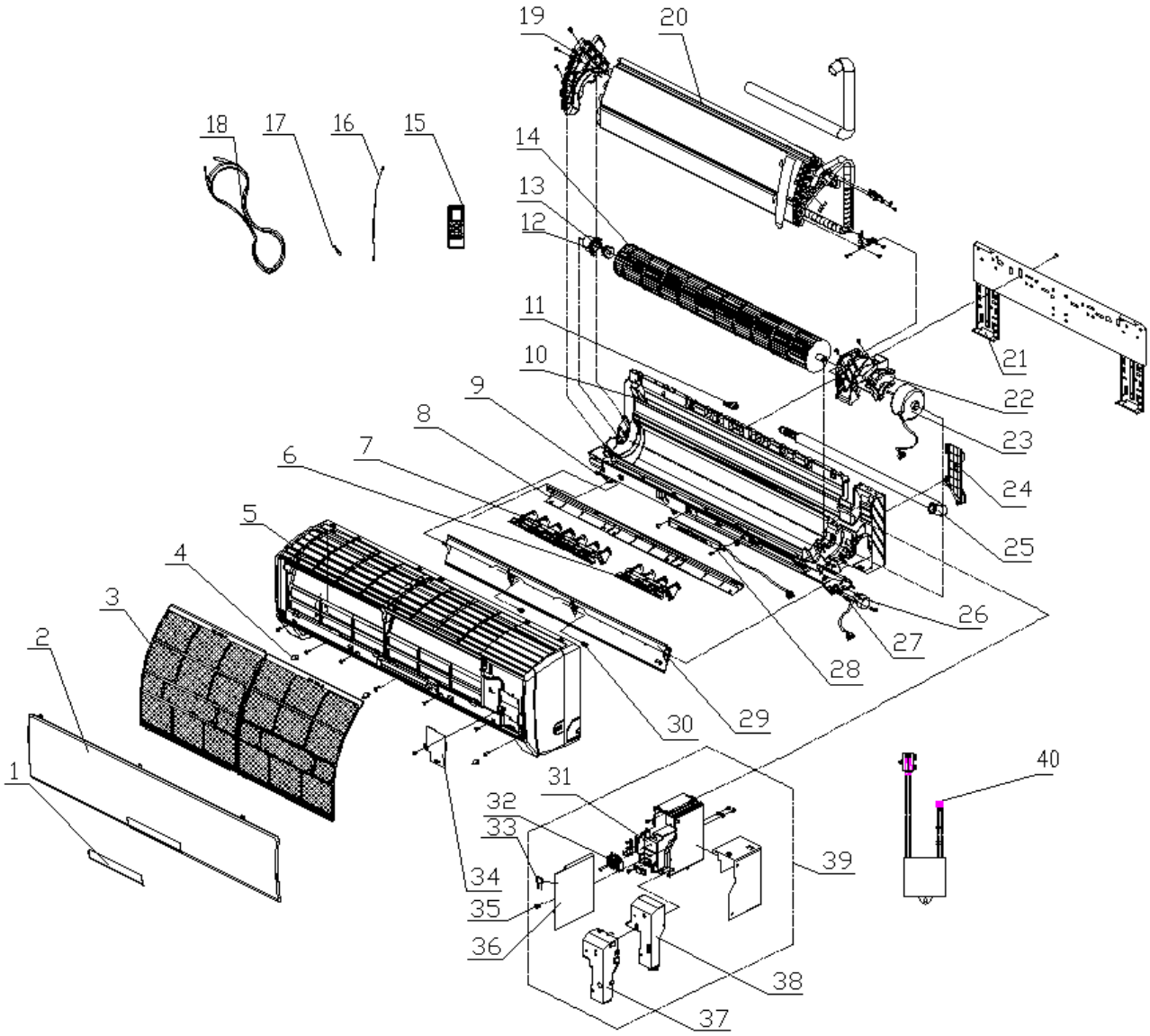

## MUPR-09-H3M
CL20821

| Nº | Descripción | Ud. | Ref. Proveedor | Código |
|---|---|---|---|---|
| 1 | Receiver Window | 0 | none | |
| 2 | Front panel assy | 1 | 2001217601 | |
| 3 | Filter Sub-Assy | 2 | 11122081 | |
| 4 | Screw Cover | 3 | 24252016 | |
| 5 | Front Case | 1 | 20012120C | |
| 6 | Swing Louver | 1 | 10512114 | |
| 7 | Air Louver 1 | 1 | 10512113 | |
| 8 | Helicoid tongue | 1 | 26112162 | |
| 9 | Axile Bush | 1 | 10542704 | |
| 10 | Rear Case assy | 1 | 2220210111 | |
| 11 | Water Tray Glue Plug | 1 | 76712012 | |
| 12 | Ring of Bearing | 1 | 26152022 | |
| 13 | O-Gasket sub-assy of Bearing | 1 | 7651205102 | |
| 14 | Cross Flow Fan (Turbina ventilador) | 1 | 10352043 | CL96178 |
| 15 | Remote Controller (Control remoto) | 1 | 305100492 | CL98052 |
| 16 | Ambient Temperature Sensor (Sensor de temp. ambiente) | 1 | 390000453 | CL98666 |
| 17 | Temperature Sensor (Sensor de temperatura de tubería) | 1 | 390000599 | CL96179 |
| 18 | Connecting Cable | 0 | 4002052317 | |
| 19 | Evaporator Support | 1 | 24212090 | |
| 20 | Evaporator Assy | 1 | 0100274301 | |
| 21 | Wall-Mounting Frame | 1 | 01252015 | |
| 22 | Motor Press Plate | 1 | 26112160 | |
| 23 | Fan Motor (Motor ventilador) | 1 | 15012115 | CL98658 |
| 24 | Pipe Clamp | 1 | 26112164 | |
| 25 | Drainage hose | 1 | 0523001406 | |
| 26 | Step Motor (Motor lamas) | 1 | 1521212901 | CL96180 |
| 27 | Crank | 1 | 10582070 | |
| 28 | Receiver Board D5183B (Placa receptora) | 1 | 30565012 | CL96181 |
| 29 | Guide Louver1 | 1 | 10512111 | |
| 30 | Axile Bush | 1 | 10542036 | |
| 31 | Electric Box | 1 | 2011216701 | |
| 32 | Terminal Board | 1 | 42011233 | |
| 33 | Capacitor CBB61 | 1 | 33010002 | |
| 34 | Electric Box Cover2 | 1 | 20122075 | |
| 35 | Jumping Connector | 1 | 4202300101 | |
| 36 | Main Board (Placa electrónica) | 1 | 30148874 | CL96682 |
| 37 | Shield cover of Electric Box sub-assy | 1 | 0159207301 | |
| 38 | Electric Box Cover1 | 1 | 22242135 | |
| 39 | Electric Box Assy | 1 | 20402551 | |
| 40 | Cold Plasma Generator | 1 | 1114001602 | |

**MUPR-12-H3M**
**CL20822**

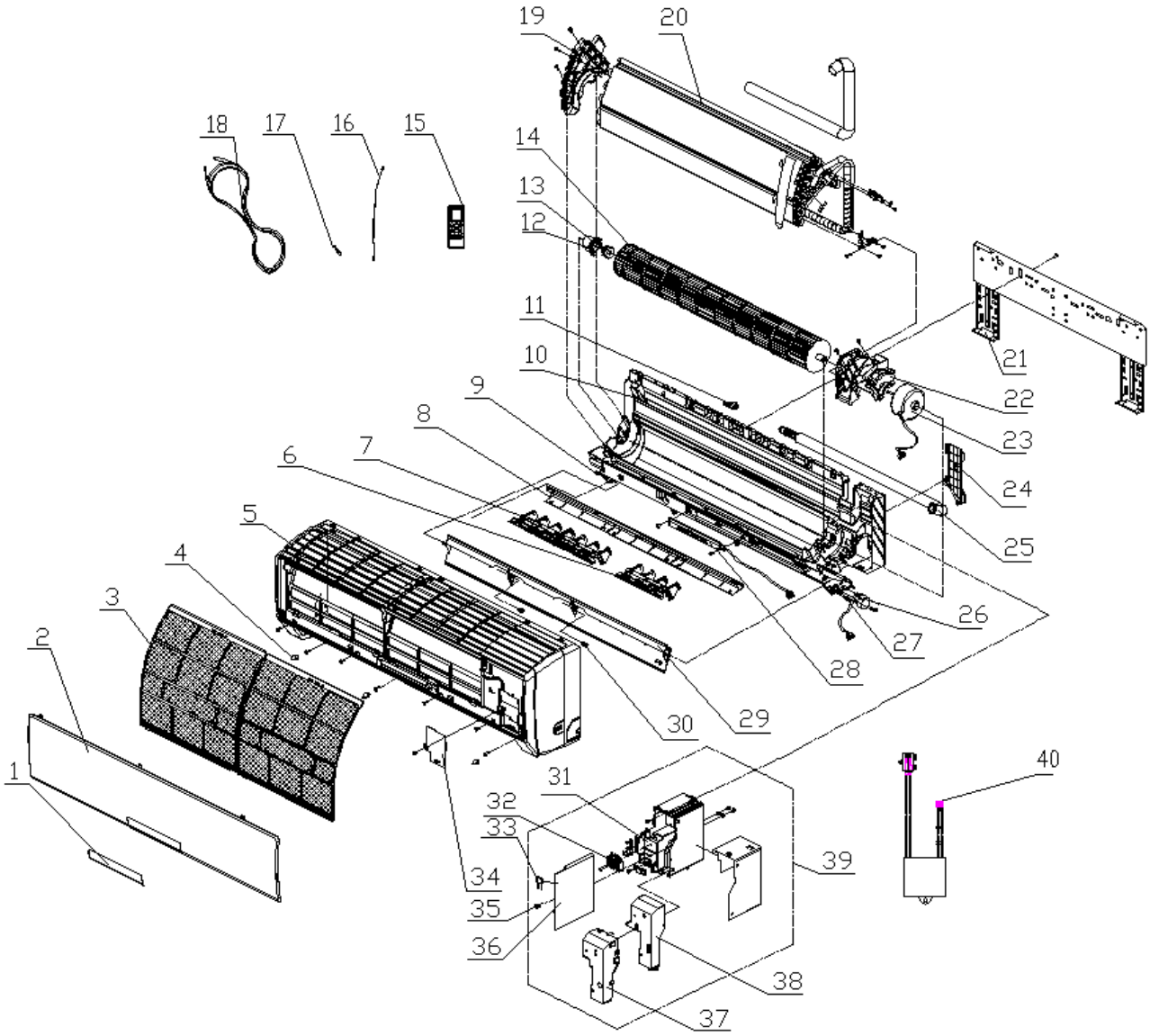

## MUPR-12-H3M
CL20822

| Nº | Descripción | Ud. | Ref. Proveedor | Código |
|---|---|---|---|---|
| 1 | Decorative Board | 1 | 2019223601 | |
| 2 | Front Panel Sub-Assy | 1 | 20012548 | |
| 3 | Filter Sub-Assy | 2 | 1112220403 | |
| 4 | Screw Cover | 1 | 24252016 | |
| 5 | Front Case Sub-Assy | 1 | 2001213908 | |
| 6 | Air Louver 2 | 1 | 10512155 | |
| 7 | Air Louver 1 | 1 | 10512156 | |
| 8 | Helicoid Tongue | 1 | 26112163 | |
| 9 | Left Axile Bush | 1 | 10512037 | |
| 10 | Rear Case assy | 1 | 2220210301 | |
| 11 | Water Tray Glue Plug | 1 | 76712012 | |
| 12 | Ring of Bearing | 1 | 26152022 | |
| 13 | O-Gasket sub-assy of Bearing | 1 | 76512051 | |
| 14 | Cross Flow Fan (Turbina ventilador) | 1 | 10352017 | CL96683 |
| 15 | Remote Controller (Control remoto) | 1 | 305100492 | CL98052 |
| 16 | Temperature Sensor (Sensor de temperatura de tubería) | 1 | 390000599 | CL96179 |
| 17 | Ambient Temperature Sensor (Sensor de temp. ambiente) | 1 | 390000453 | CL98666 |
| 18 | Connecting Cable | 0 | 4002052317 | |
| 19 | Evaporator Support | 1 | 24212091 | |
| 20 | Evaporator Assy | 1 | 0100274401 | |
| 21 | Wall Mounting Frame | 1 | 01252021 | |
| 22 | Motor Press Plate | 1 | 26112161 | |
| 23 | Motor FN20J-PG (Motor ventilador) | 1 | 150120874 | CL98660 |
| 24 | Pipe Clamp | 1 | 26112164 | |
| 25 | Drainage Pipe | 1 | 0523001401 | |
| 26 | Step Motor (Motor lamas) | 1 | 1521212901 | CL96180 |
| 27 | Crank | 1 | 10582070 | |
| 28 | Receiver Board D5183B (Placa receptora) | 1 | 30565012 | CL96181 |
| 29 | Guide Louver | 1 | 10512157 | |
| 30 | Axile Bush | 1 | 10542036 | |
| 31 | Electric Box | 1 | 2011216701 | |
| 32 | Terminal Board | 1 | 42011233 | |
| 33 | Capacitor CBB61 | 1 | 33010002 | |
| 34 | Electric Box Cover2 | 1 | 20122075 | |
| 35 | Jumper Cap | 1 | 4202300104 | |
| 36 | Main Board (Placa electrónica) | 1 | 30148874 | CL96682 |
| 37 | Shield cover of Electric Box sub-assy | 1 | 0159207301 | |
| 38 | Electric Box Cover1 | 1 | 22242135 | |
| 39 | Electric Box Assy | 1 | 20402556 | |
| | Cold Plasma Generator | 1 | 1114001602 | |

**MUPR-18-H3M**
CL20823

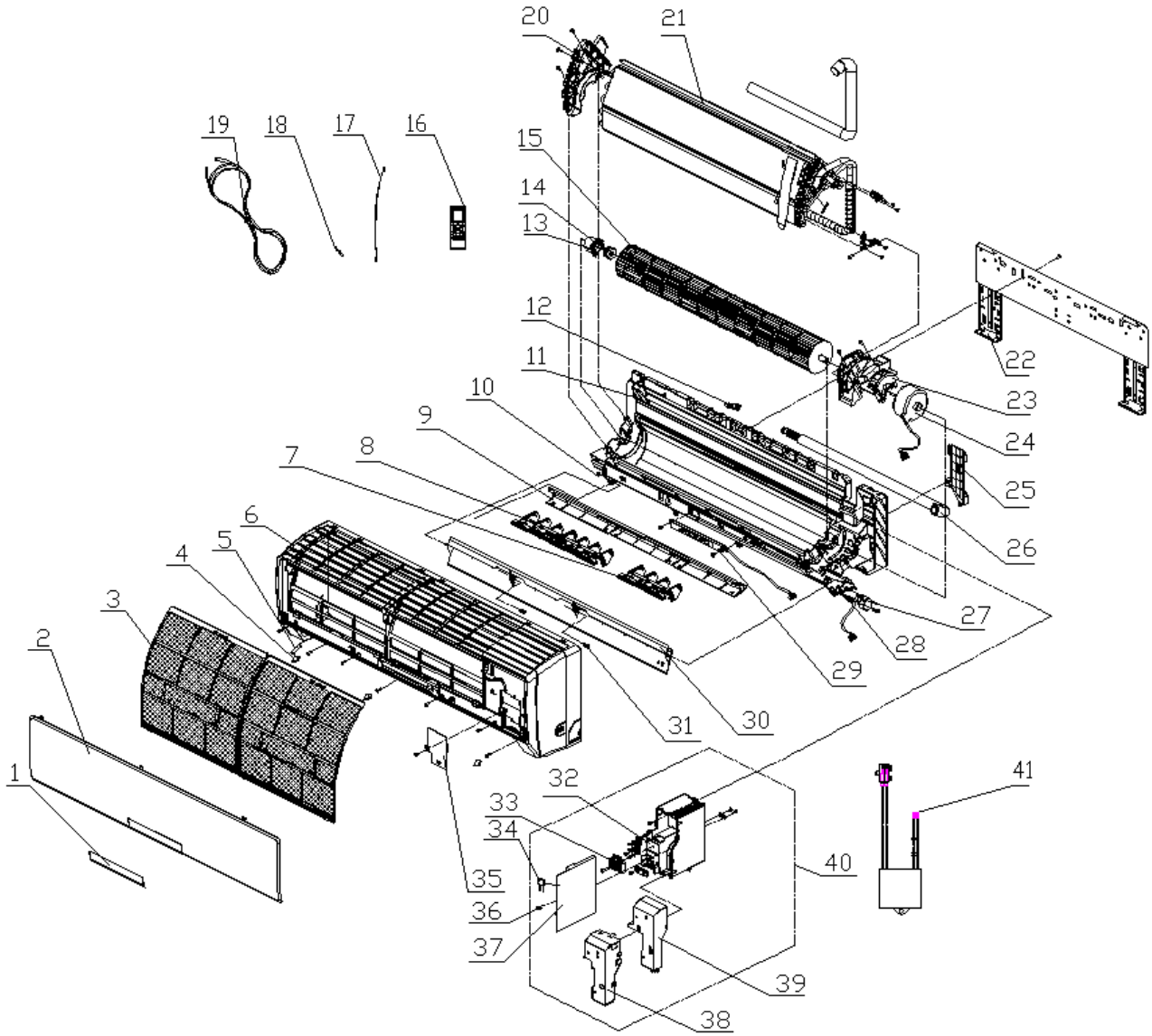

## MUPR-18-H3M
CL20823

| Nº | Descripción | Ud. | Ref. Proveedor | Código |
|---|---|---|---|---|
| 1 | Decorative Board | 1 | 20192260 | |
| 2 | Front Panel Assy | 1 | 20012280 | |
| 3 | Filter Sub-Assy | 2 | 1112208901 | |
| 4 | Screw Cover | 3 | 24252016 | |
| 5 | Baffle Plate | 1 | 26112228 | |
| 6 | Front Case Sub-assy | 1 | 20022172 | |
| 7 | Air Louver 2 | 1 | 10512117 | |
| 8 | Air Louver 1 | 1 | 10512116 | |
| 9 | Helicoid Tongue | 1 | 26112238 | |
| 10 | Left Axile Bush | 1 | 10512037 | |
| 11 | Rear Case assy | 1 | 12312214 | |
| 12 | Water Tray Glue Plug | 1 | 76712012 | |
| 13 | Ring of Bearing | 1 | 26152022 | |
| 14 | O-Gasket sub-assy of Bearing | 1 | 76512051 | |
| 15 | Cross Flow Fan (Turbina ventilador) | 1 | 10352019 | CL98648 |
| 16 | Remote Controller (Control remoto) | 1 | 305100492 | CL98052 |
| 17 | Temperature Sensor (Sensor de temperatura de tubería) | 1 | 390000599 | CL96179 |
| 18 | Ambient Temperature Sensor (Sensor de temp. ambiente) | 1 | 390000453 | CL98666 |
| 19 | Connecting Cable | 0 | 4002052317 | |
| 20 | Evaporator Support | 1 | 24212133 | |
| 21 | Evaporator Assy | 1 | 01002774 | |
| 22 | Wall Mounting Frame | 1 | 01252218 | |
| 23 | Motor Press Plate | 1 | 26112494 | |
| 24 | Fan Motor (Motor ventilador) | 1 | 15012146 | CL96184 |
| 25 | Pipe Clamp | 1 | 26112164 | |
| 26 | Drain Pipe | 1 | 05230014 | |
| 27 | Step Motor (Motor lamas) | 1 | 15012086 | CL96686 |
| 28 | Crank | 1 | 10582070 | |
| 29 | Display Board (Placa display) | 1 | 30565039 | CL96186 |
| 30 | Guide Louver | 1 | 10512115 | |
| 31 | Axile Bush | 1 | 10542036 | |
| 32 | Electric Box | 1 | 2011210801 | |
| 33 | Terminal Board | 1 | 42011233 | |
| 34 | Capacitor CBB61 | 1 | 33010043 | |
| 35 | Electric Box Cover2 | 1 | 20112081 | |
| 36 | Jumper Cap | 1 | 4202300108 | |
| 37 | Main Board (Placa electrónica) | 1 | 30148877 | CL96187 |
| 38 | Shield Cover of Electric Box | 1 | 01592092 | |
| 39 | Electric Box Cover1 | 1 | 20122154 | |
| 40 | Electric Box Assy | 1 | 20402557 | |
| | Cold Plasma Generator | 1 | 1114001602 | |

**MUCSR-12-H3M**
**CL20824**

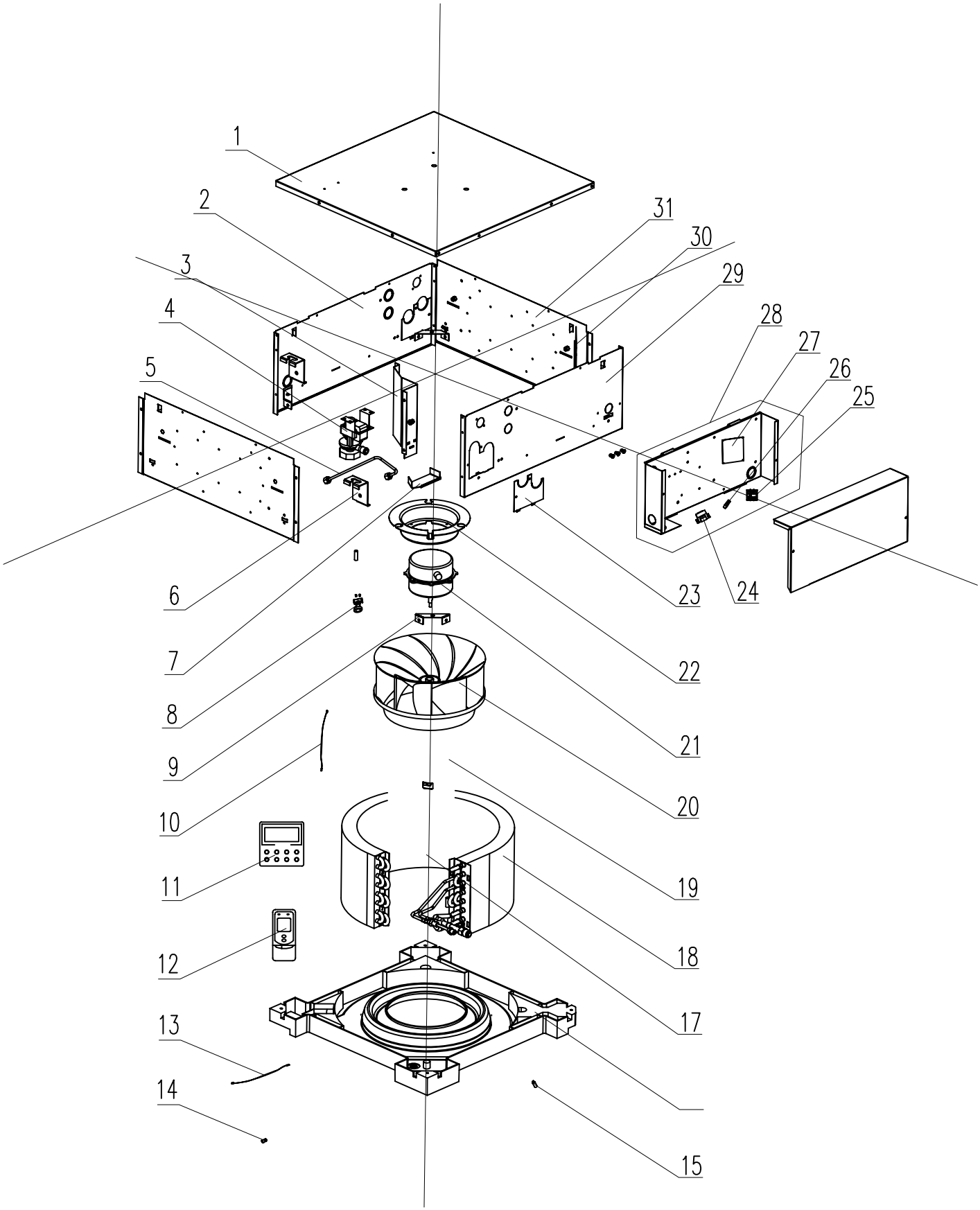

## MUCSR-12-H3M
**CL20824**

| Nº | Descripción | Ud. | Ref. Proveedor | Código |
|---|---|---|---|---|
| 1 | Seat Board Sub-Assy | 1 | 01222712 | |
| 2 | Front Side Plate | 1 | 01314211 | |
| 3 | Right baffle Assy | 1 | 01362704 | |
| 4 | Water Pump (Bomba de condensados) | 1 | 43130320 | CL96951 |
| 5 | Pump Drainpipe | 1 | 05232722 | |
| 6 | Major Mounting Rack | 4 | 01332705 | |
| 7 | Pump Support Assy | 1 | 01332708 | |
| 8 | Water Level Switch (Interruptor de nivel) | 1 | 450127011 | CL98390 |
| 9 | Water Tray Support | 4 | 01332706 | |
| 10 | Temperature Sensor (Sensor de temperatura de tubería) | 1 | 390001982G | CL96680 |
| 11 | Display Board | 1 | 30296317 | |
| 12 | Remote Controller (Control remoto) | 1 | 305100492 | CL98052 |
| 13 | Ambient Temperature Sensor (Sensor de temp. ambiente) | 1 | 3900019813 | CL96681 |
| 14 | Filter Sub-Assy | 1 | 11120012 | |
| 15 | Filter Sub-Assy | 1 | 11120011 | |
| 16 | Water Tray Assy | 1 | 20182704 | |
| 17 | Evaporator Support | 1 | 01072714 | |
| 18 | Evaporator Assy | 1 | 01024307 | |
| 19 | Evaporator Connection Board | 1 | 01072713 | |
| 20 | Centrifugal Fan (Ventilador centrífugo) | 1 | 10312702 | CL96420 |
| 21 | Fan Motor (Motor ventilador) | 1 | 15704114 | CL96158 |
| 22 | Motor Support | 1 | 01702702 | |
| 23 | Tube Exit Plate Assy | 1 | 01382719 | |
| 24 | Transformer | 1 | 43110226 | |
| 25 | Terminal Board | 1 | 420111041 | |
| 26 | Capacitor CBB61 | 1 | 33010026 | |
| 27 | Main Board (Placa electrónica) | 1 | 30226354 | CL96159 |
| 28 | Electric Box Assy | 1 | 01399534 | |
| 29 | Front Side Plate | 1 | 01302741 | |
| 30 | Pass WirePlate | 1 | 01362701 | |
| 31 | Right Side Plate Sub-Assy | 2 | 01302743 | |
| | Fix Gasket of Fan | 1 | 76712709 | |
| | Motor Gasket | 3 | 76712705 | |
| | Signal Wire | 1 | 40030079 | |
| | Pump Gasket 2 | 1 | 76712708 | |
| | Pump Gasket 1 | 1 | 76712707 | |

## MUCSR-18-H3M
CL20825

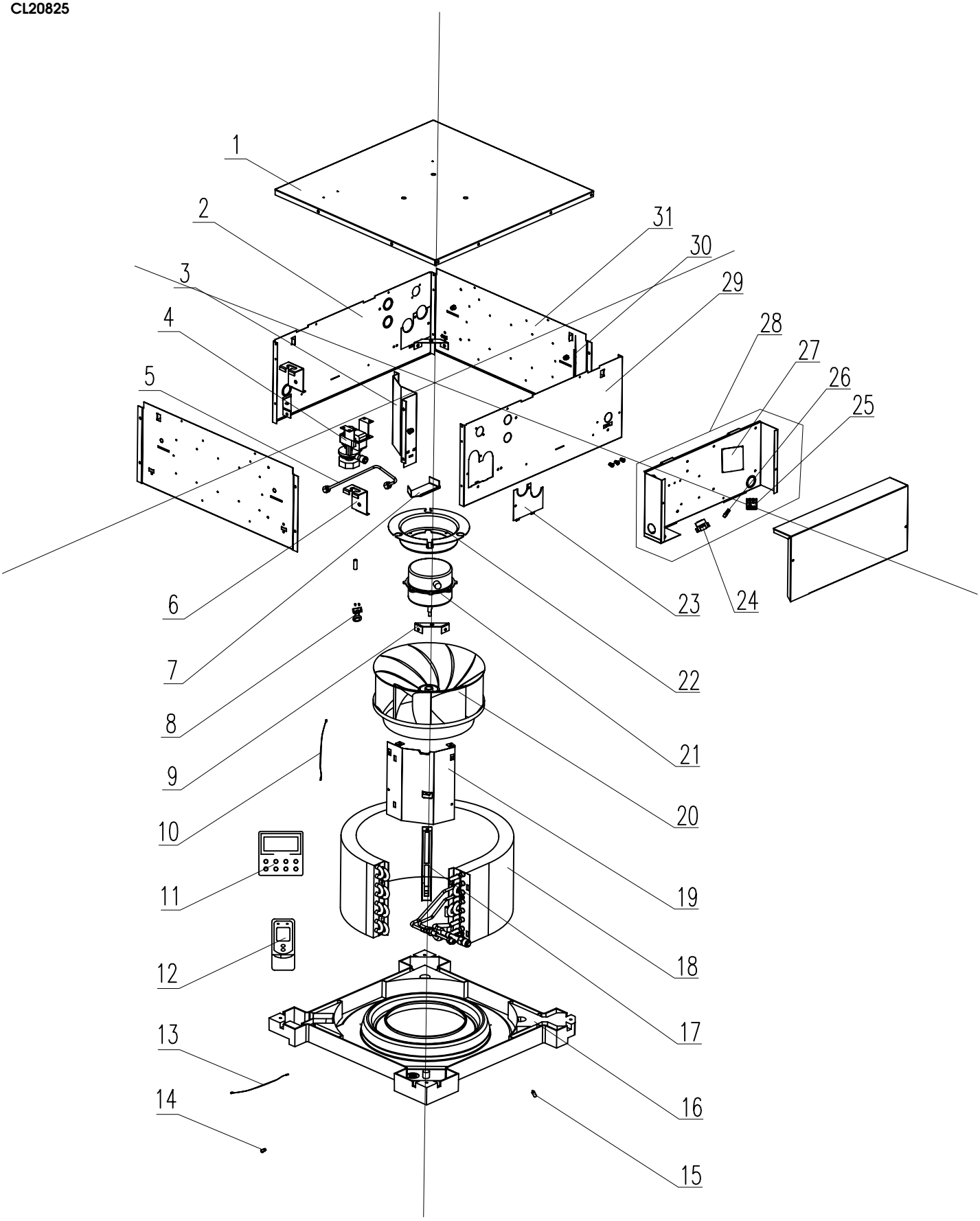

## MUCSR-18-H3M
**CL20825**

| Nº | Descripción | Ud. | Ref. Proveedor | Código |
|---|---|---|---|---|
| 1 | Seat Board Sub-Assy | 1 | 01222712 | |
| 2 | Front Side Plate | 1 | 01314211 | |
| 3 | Right baffle Assy | 1 | 01362704 | |
| 4 | Water Pump (Bomba de condensados) | 1 | 43130320 | CL96951 |
| 5 | Pump Drainpipe | 1 | 05232722 | |
| 6 | Major Mounting Rack | 4 | 01332705 | |
| 7 | Pump Support Assy | 1 | 01332708 | |
| 8 | Water Level Switch (Interruptor de nivel) | 1 | 450127011 | CL98390 |
| 9 | Water Tray Support | 4 | 01332706 | |
| 10 | Temperature Sensor (Sensor de temperatura de tubería) | 1 | 390001982G | CL96680 |
| 11 | Display Board | 1 | 30296317 | |
| 12 | Remote Controller (Control remoto) | 1 | 305100492 | CL98052 |
| 13 | Ambient Temperature Sensor (Sensor de temp. ambiente) | 1 | 3900019813 | CL96681 |
| 14 | Filter Sub-Assy | 1 | 11120011 | |
| 15 | Filter Sub-assy | 1 | 11128633 | |
| 16 | Water Tray Assy | 1 | 20182704 | |
| 17 | Evaporator Support | 1 | 01072714 | |
| 18 | Evaporator Assy | 1 | 0102430701 | |
| 19 | Evaporator Connection Board | 1 | 01072713 | |
| 20 | Centrifugal Fan (Ventilador centrífugo) | 1 | 10312702 | CL96420 |
| 21 | Fan Motor (Motor ventilador) | 1 | 15704114 | CL96158 |
| 22 | Motor Support | 1 | 01702702 | |
| 23 | Tube Exit Plate Assy | 1 | 01382719 | |
| 24 | Transformer | 1 | 43110226 | |
| 25 | Terminal Board | 1 | 420111041 | |
| 26 | Capacitor CBB61 | 1 | 33010026 | |
| 27 | Main Board (Placa electrónica) | 1 | 30226354 | CL96159 |
| 28 | Electric Box Assy | 1 | 01399534 | |
| 29 | Front Side Plate | 1 | 01302741 | |
| 30 | Pass WirePlate | 1 | 01362701 | |
| 31 | Right Side Plate Sub-Assy | 2 | 01302743 | |
| | Fix Gasket of Fan | 1 | 76712709 | |
| | Motor Gasket | 3 | 76712705 | |
| | Signal Wire | 1 | 40030079 | |
| | Pump Gasket 2 | 1 | 76712708 | |
| | Pump Gasket 1 | 1 | 76712707 | |

## MUCSR-24-H3M
CL20826

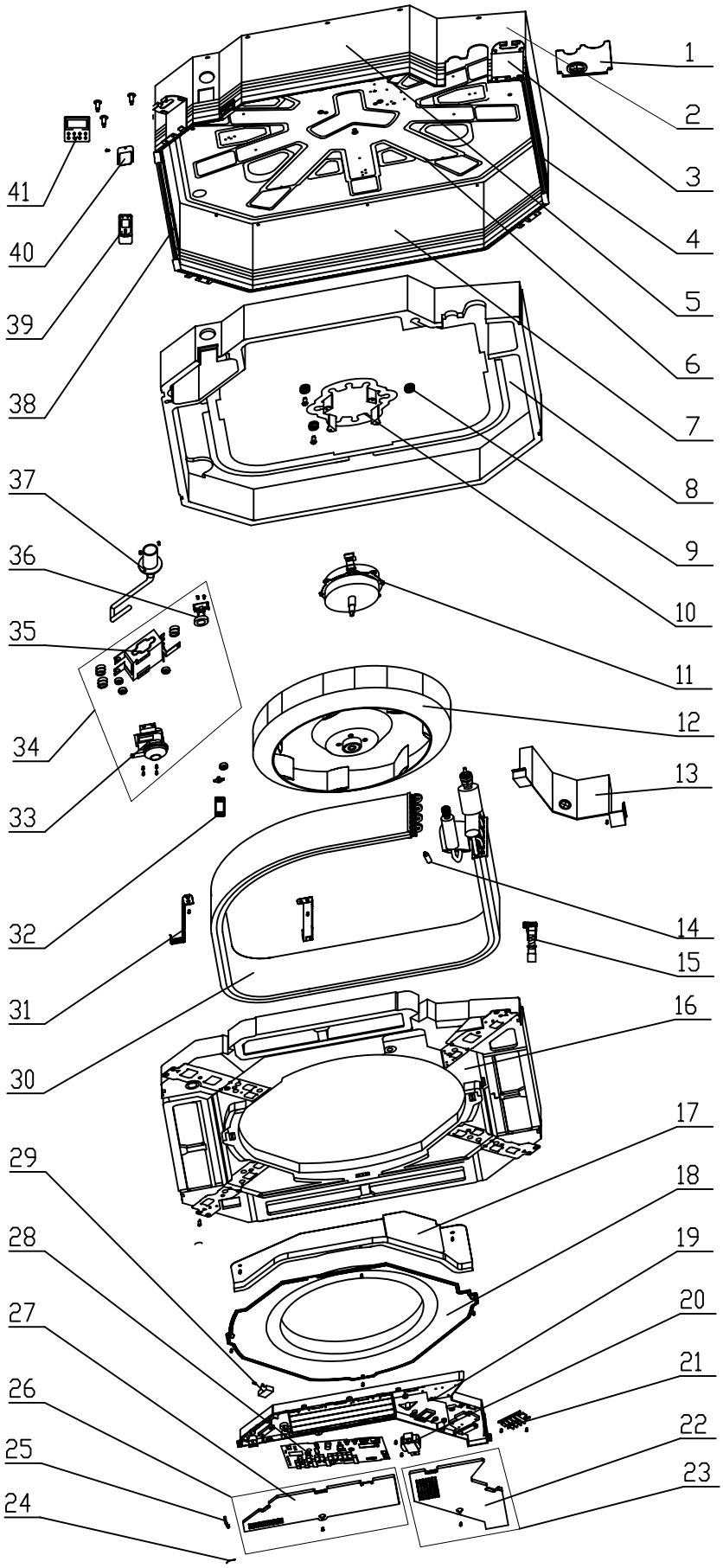

## MUCSR-24-H3M
CL20826

| Nº | Descripción | Ud. | Ref. Proveedor | Código |
|---|---|---|---|---|
| 1 | Tube Exit Plate Assy | 1 | 01382715 | |
| 2 | Shell Assy | 1 | 01432704 | |
| 3 | Major Mounting Plate | 4 | 01332701 | |
| 4 | Front Side Plate | 1 | 01302718 | |
| 5 | Left Side Plate Assy | 1 | 01302715 | |
| 6 | Base Plate | 1 | 01222705 | |
| 7 | Rear Side Plate | 1 | 01302714 | |
| 8 | Bottom Foam Assy | 1 | 52012722 | |
| 9 | Motor Gasket | 4 | 76712711 | |
| 10 | Motor Mounting Rack | 1 | 01702701 | |
| 11 | Fan Motor (Motor ventilador) | 1 | 15704102 | CL96160 |
| 12 | Centrifugal Fan (Ventilador centrífugo) | 1 | 10312705 | CL98324 |
| 13 | Connection Sheet Assy | 1 | 01074042 | |
| 14 | Filter Sub-assy | 1 | 07210028 | |
| 15 | Drain Hose Assy | 1 | 05232702 | |
| 16 | Water Tray Assy | 1 | 20182701 | |
| 17 | Electric Box Base Plate | 1 | 01412721 | |
| 18 | Flow Guide Loop | 1 | 10372701 | |
| 19 | GKH(24)BA-K3DNA1A | 1 | 01399520 | |
| 20 | Transformer 48X26G | 1 | 43110233 | |
| 21 | Terminal Board | 1 | 42011222 | |
| 22 | Electric Box Cover | 1 | 20102702 | |
| 23 | Electric Box Cover Sub-Assy1 | 1 | 20122054 | |
| 24 | Ambient Temperature Sensor (Sensor de temp. ambiente) | 1 | 390000453 | CL98666 |
| 25 | Temperature Sensor (Sensor de temperatura de tubería) | 1 | 390001982G | CL96680 |
| 26 | Electric Box Cover Sub-Assy2 | 1 | 20122055 | |
| 27 | Electric Box Cover | 1 | 20102703 | |
| 28 | Main Board (Placa electrónica) | 1 | 30226340 | CL96161 |
| 29 | Capacitor CBB611A(3uF/450V) | 1 | 33010027 | |
| 30 | Evaporator Assy | 1 | 01004641 | |
| 31 | Evaporator of Fixed Mount | 2 | 01072703 | |
| 32 | Magnetic Ring | 1 | 49010104 | |
| 33 | Water Pump (Bomba de condensados) | 1 | 43130324 | CL98412 |
| 34 | Water Pump Assy | 1 | 01332752 | |
| 35 | Water Pump Mounting Rack | 1 | 01332702 | |
| 36 | Water Level Switch (Interruptor de nivel) | 1 | 45010201 | CL96946 |
| 37 | Drain Pipe for Water Pump | 1 | 05230026 | |
| 38 | Right Side Plate | 1 | 01302716 | |
| 39 | Remote Controller (Control remoto) | 1 | 305100492 | CL98052 |
| 40 | Pump Backup Cover Plate Assy | 1 | 01252713 | |
| 41 | Display Board | 1 | 30296317 | |

## MUCSR-12-H3M (Panel TA03)
## MUCSR-18-H3M (Panel TA03)

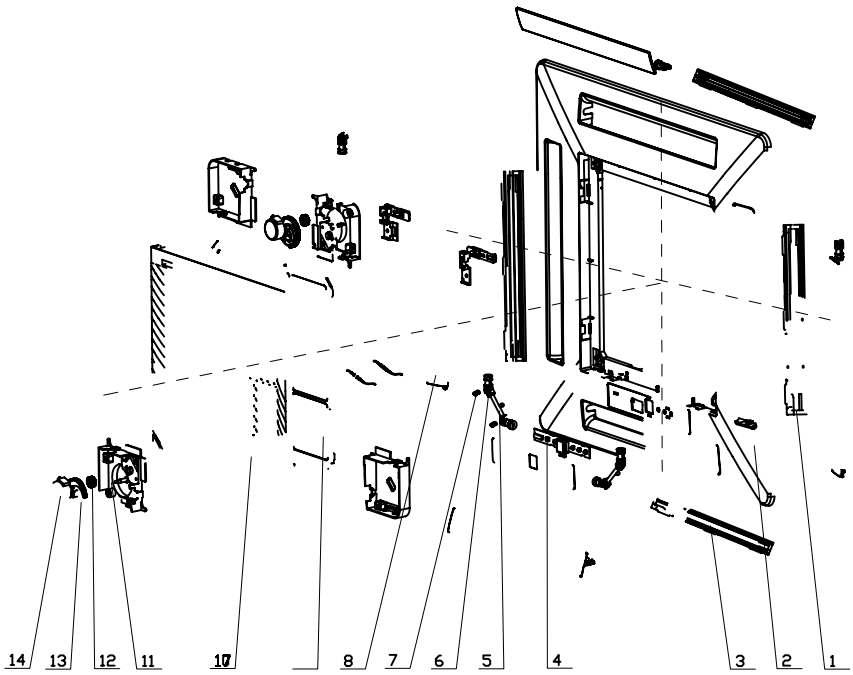


| N | Description | Qty | Supplier code | Code |
|---|---|---|---|---|
| 1 | Air Outlet Foam 1 | 4 | 12312704 | |
| 2 | Front Panel | 1 | 20002704 | |
| 3 | Air Outlet Foam 2 | 4 | 12312705 | |
| 4 | Receiver Board | 1 | 30261001 | CL96904 |
| 5 | Connecting Rod | 2 | 10582704 | |
| 6 | Gimbal | 4 | 10562704 | |
| 7 | Universal Joint | 8 | 10562703 | |
| 8 | Guide Louver | 4 | 10512702 | |
| 9 | Filter Sub-Assy | 1 | 11122703 | CL96582 |
| 10 | Front grill assy | 1 | 22412706 | |
| 11 | Inner Conner Cover 1 | 1 | 22242715 | CL96429 |
| 12 | Little Gear | 1 | 73012701 | |
| 13 | Big Gear | 1 | 73012702 | |
| 14 | Step Motor | 1 | 15210104 | CL96269 |

## MUCSR-24-H3M (Panel TB04)

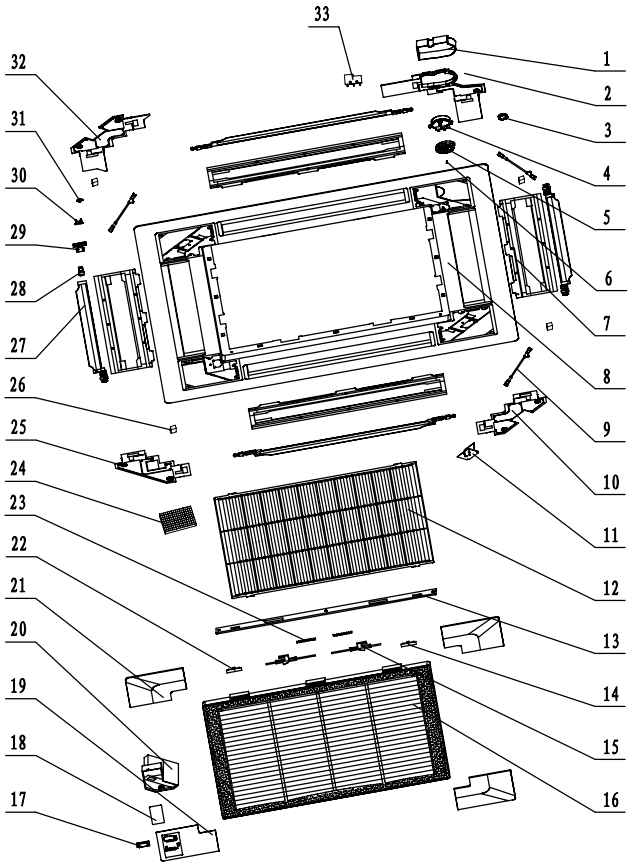


| N | Description | Qty | Supplier code | Code |
|---|---|---|---|---|
| 1 | Motor Cover | 1 | 22242701 | |
| 2 | Inner Conner Cover 4 | 1 | 22242705 | |
| 3 | Magnetic Ring | 1 | 49010104 | CL96815 |
| 4 | Synchronizing Motor SM008 | 1 | 15212701 | CL96248 |
| 5 | Motor Holder | 1 | 26152702 | |
| 6 | Pin | 1 | 70410603 | |
| 7 | Foam | 4 | 12312701 | |
| 8 | Front Panel | 1 | 20002701 | |
| 9 | Connecting Rod | 3 | 10582701 | |
| 10 | Inner Conner Cover 3 | 1 | 22242704 | |
| 11 | Hanging Ring | 4 | 70810101 | |
| 12 | Filter | 1 | 11122701 | CL96581 |
| 13 | Hook Fixer | 1 | 01722721 | |
| 14 | Net Hook | 2 | 26252703 | |
| 15 | Right Clamp | 1 | 26252702 | |
| 16 | Front Grill | 1 | 2241270203 | |
| 17 | Receiving Window | 1 | 22432702 | |
| 18 | Receiver Board KJ | 1 | 30041001 | |
| 19 | Outer Corner Cover | 1 | 22242714 | |
| 20 | Cover of Receiver | 1 | 22242708 | CL96427 |
| 21 | Outer Conner Cover 1 | 1 | 22242706 | |
| 22 | Left Clip | 1 | 26252701 | |
| 23 | Spring 6.3x62 | 2 | 73010011 | |
| 24 | Filter of Air Cleaner | 3 | 11012701 | |
| 25 | Inner Conner Cover 2 | 1 | 22242703 | |
| 26 | Magnet | 2 | 70840001 | |
| 27 | Air Guide Plate | 4 | 10512107 | |
| 28 | Crank | 8 | 10542701 | |
| 29 | Position Holder | 8 | 26152701 | |
| 30 | Universal Joint | 8 | 10562702 | |
| 31 | Gimbal | 6 | 10562701 | |
| 32 | Inner Conner Cover 1 | 1 | 22242702 | |
| 33 | Inching Switch | 1 | 45010054 | |

## MUCNR-09-H3M
CL20827

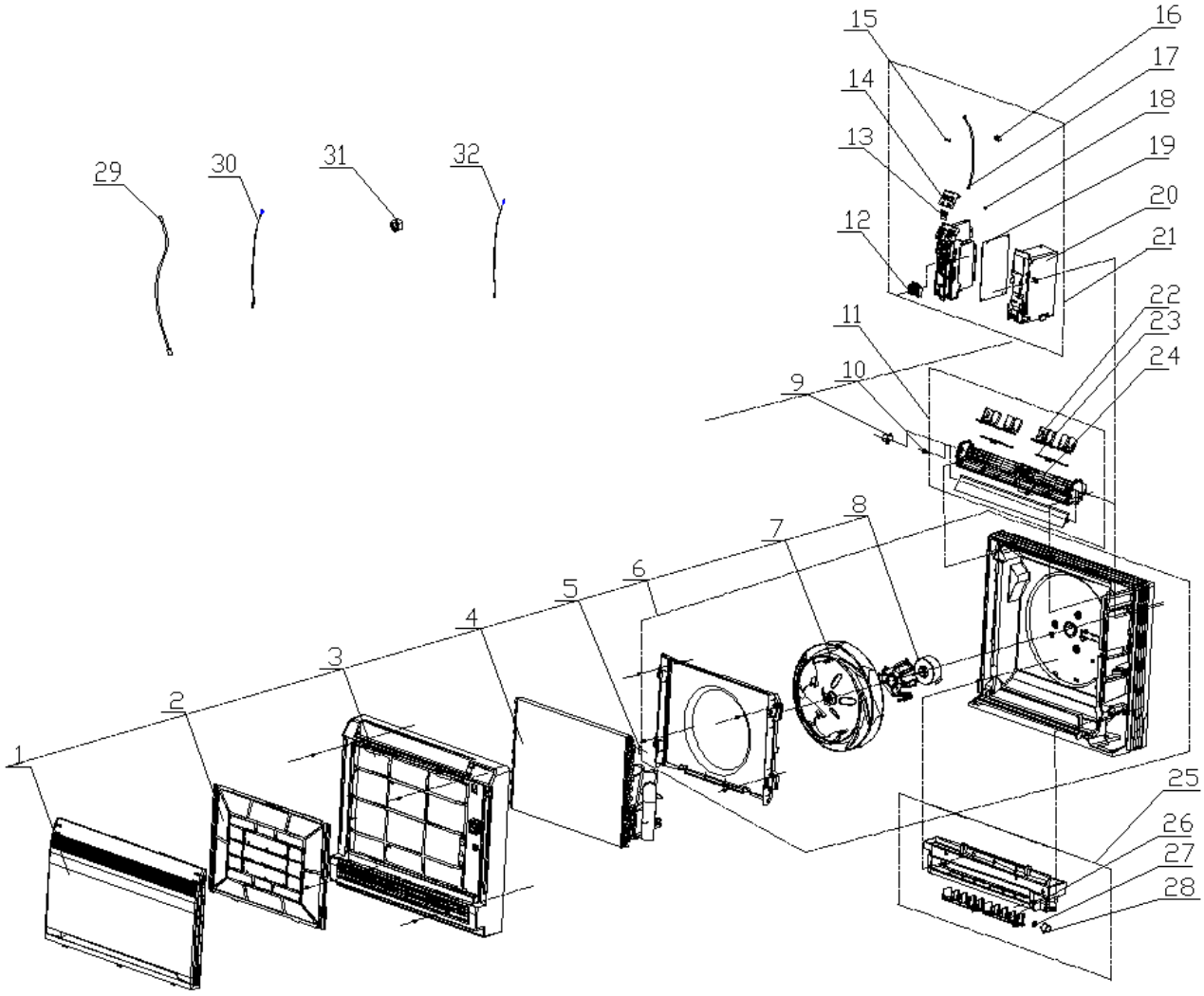

## MUCNR-09-H3M
**CL20827**

| Nº | Descripción | Ud. | Ref. Proveedor | Código |
|---|---|---|---|---|
| 1 | Front Panel Assy | 1 | 20012756 | |
| 2 | Filter Sub-Assy | 1 | 11122139 | |
| 3 | Front Case Assy | 1 | 20012601 | |
| 4 | Evaporator Assy | 1 | 01002637 | |
| 5 | Cold Plasma Generator | 1 | 1114001604 | |
| 6 | Rear Case assy | 1 | 22202462 | |
| 7 | Centrifugal Fan (Ventilador centrífugo) | 1 | 10312005 | CL96168 |
| 8 | Fan Motor (Motor ventilador) | 1 | 15012123 | CL96169 |
| 9 | Step Motor (Motor lamas) | 1 | 1521210101 | CL96170 |
| 10 | Crank | 1 | 73012005 | |
| 11 | Swing Assy | 1 | 10102042 | |
| 12 | Terminal Board | 1 | 42011233 | |
| 13 | Switch Board | 1 | 30112007 | |
| 14 | Display Board (Placa display) | 1 | 30568131 | CL96171 |
| 15 | Fuse | 1 | 46010055 | |
| 16 | Radiator | 1 | 49010252 | |
| 17 | Connection Wire | 1 | 4003004202 | |
| 18 | Jumping Connector | 1 | 4202300101 | |
| 19 | Main Board (Placa electrónica) | 1 | 30138000047 | CL96172 |
| 20 | Electric Box | 1 | 20112116 | |
| 21 | Electric Box Assy | 1 | 20102000184 | |
| 22 | Air Louver (upper) | 2 | 10512143 | |
| 23 | Swing lever | 2 | 10582096 | |
| 24 | Shaft of Guide Louver | 2 | 10542020 | |
| 25 | Water Tray Assy | 1 | 20182141 | |
| 26 | Air Louver (lower) | 2 | 10512144 | |
| 27 | Axis (lower step motor) | 1 | 10542034 | |
| 28 | Step Motor (Motor lamas) | 1 | 1521210805 | CL96173 |
| 29 | Connecting Cable | 0 | 4002052317 | |
| 30 | Temperature Sensor (Sensor de temperatura de tubería) | 1 | 390000591 | CL98667 |
| 31 | Remote Controller (Control remoto) | 1 | 30510134 | CL96174 |
| 32 | Ambient Temperature Sensor (Sensor de temp. ambiente) | 1 | 390000451 | CL98668 |

## MUCNR-12-H3M
CL20828

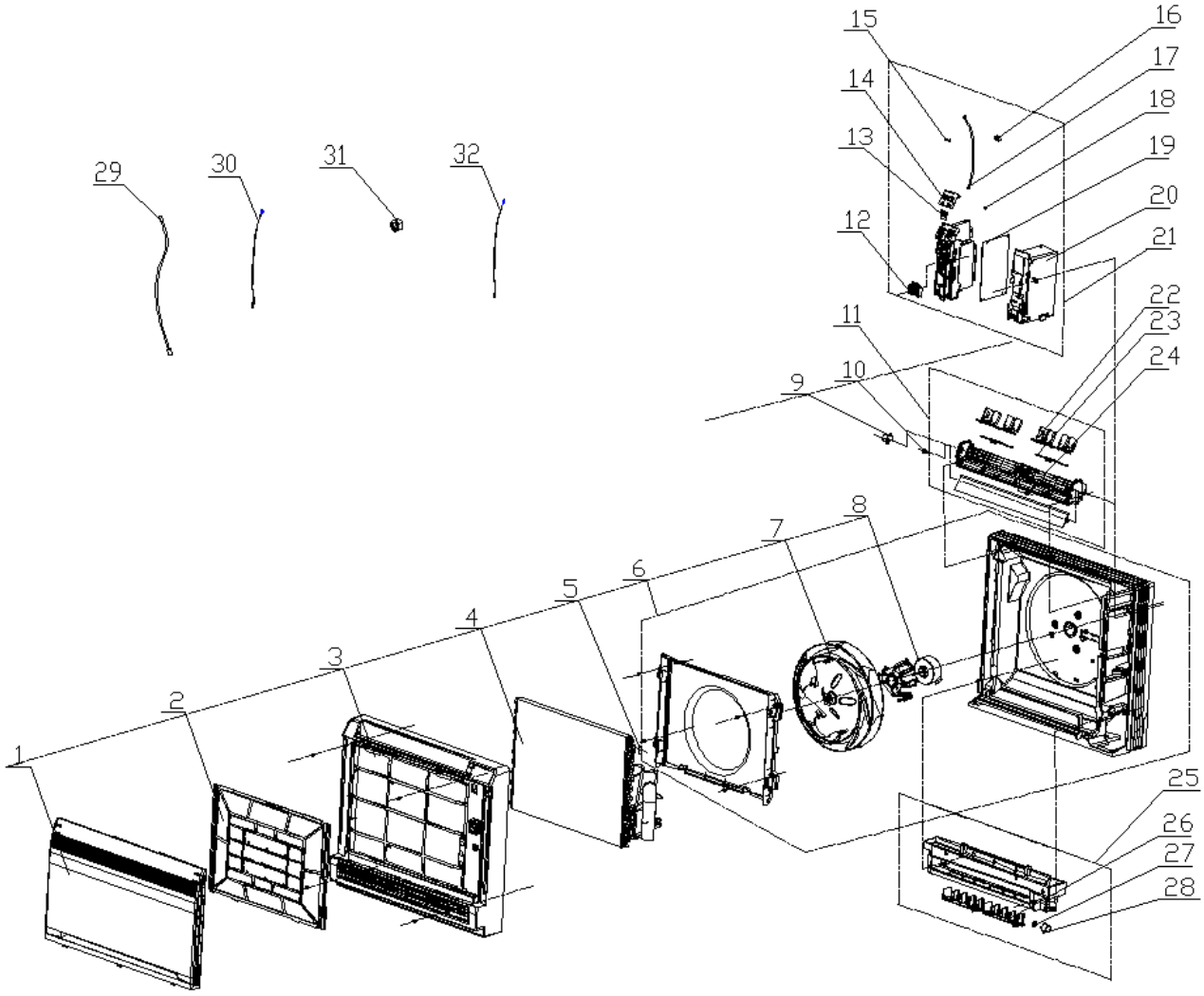

## MUCNR-12-H3M
**CL20828**

| Nº | Descripción | Ud. | Ref. Proveedor | Código |
|---|---|---|---|---|
| 1 | Front Panel Assy | 1 | 20012756 | |
| 2 | Filter Sub-Assy | 1 | 11122139 | |
| 3 | Front Case Assy | 1 | 20012601 | |
| 4 | Evaporator Assy | 1 | 01002333 | |
| 5 | Cold Plasma Generator | 1 | 1114001604 | |
| 6 | Rear Case assy | 1 | 22202462 | |
| 7 | Centrifugal Fan (Ventilador centrífugo) | 1 | 10312005 | CL96168 |
| 8 | Fan Motor (Motor ventilador) | 1 | 15012123 | CL96169 |
| 9 | Step Motor (Motor lamas) | 1 | 1521210101 | CL96170 |
| 10 | Crank | 1 | 73012005 | |
| 11 | Swing Assy | 1 | 10102042 | |
| 12 | Terminal Board | 1 | 42011233 | |
| 13 | Switch Board | 1 | 30112007 | |
| 14 | Display Board (Placa display) | 1 | 30568131 | CL96171 |
| 15 | Fuse | 1 | 46010055 | |
| 16 | Radiator | 1 | 49010252 | |
| 17 | Connection Wire | 1 | 4003004202 | |
| 18 | Jumping Connector | 1 | 4202300102 | |
| 19 | Main Board (Placa electrónica) | 1 | 30138000047 | CL96172 |
| 20 | Electric Box | 1 | 20112116 | |
| 21 | Electric Box Assy | 1 | 20102000185 | |
| 22 | Air Louver (upper) | 2 | 10512143 | |
| 23 | Swing lever | 2 | 10582096 | |
| 24 | Shaft of Guide Louver | 2 | 10542020 | |
| 25 | Water Tray Assy | 1 | 20182141 | |
| 26 | Air Louver (lower) | 2 | 10512144 | |
| 27 | Axis (lower step motor) | 1 | 10542034 | |
| 28 | Step Motor (Motor lamas) | 1 | 1521210805 | CL96173 |
| 29 | Connecting Cable | 0 | 4002052317 | |
| 30 | Temperature Sensor (Sensor de temperatura de tubería) | 1 | 390000591 | CL98667 |
| 31 | Remote Controller (Control remoto) | 1 | 30510134 | CL96174 |
| 32 | Ambient Temperature Sensor (Sensor de temp. ambiente) | 1 | 390000451 | CL98668 |

## MUCNR-18-H3M
CL20829

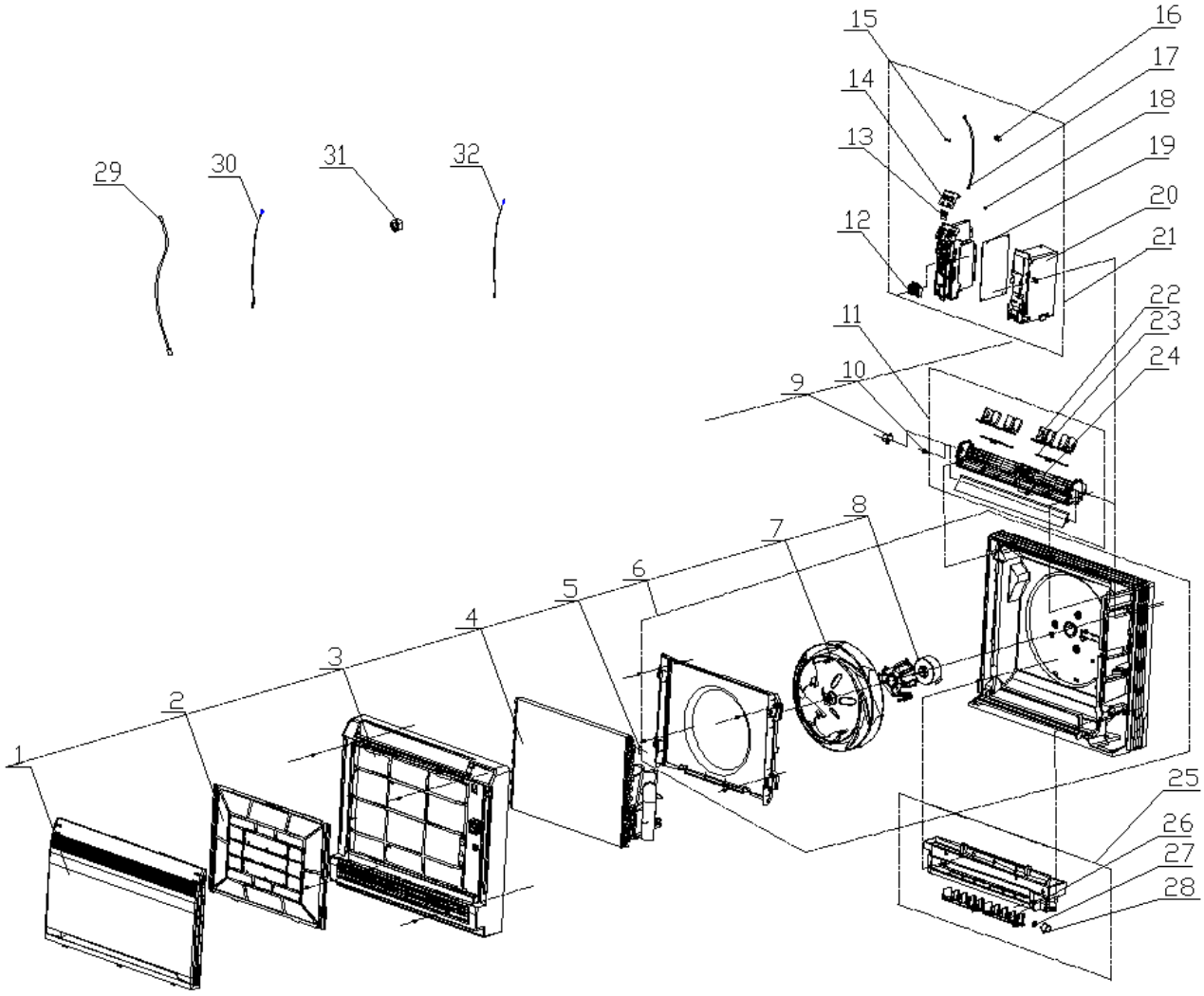

## MUCNR-18-H3M
CL20829

| Nº | Descripción | Ud. | Ref. Proveedor | Código |
|---|---|---|---|---|
| 1 | Front Panel Assy | 1 | 20012756 | |
| 2 | Filter Sub-Assy | 1 | 11122139 | |
| 3 | Front Case Assy | 1 | 20012601 | |
| 4 | Evaporator Assy | 1 | 01002332 | |
| 5 | Cold Plasma Generator | 1 | 1114001604 | |
| 6 | Rear Case assy | 1 | 22202462 | |
| 7 | Centrifugal Fan (Ventilador centrífugo) | 1 | 10312005 | CL96168 |
| 8 | Fan Motor (Motor ventilador) | 1 | 15012123 | CL96169 |
| 9 | Step Motor (Motor lamas) | 1 | 1521210101 | CL96170 |
| 10 | Crank | 1 | 73012005 | |
| 11 | Swing Assy | 1 | 10102042 | |
| 12 | Terminal Board | 1 | 42011233 | |
| 13 | Switch Board | 1 | 30112007 | |
| 14 | Display Board (Placa display) | 1 | 30568131 | CL96171 |
| 15 | Fuse | 1 | 46010055 | |
| 16 | Radiator | 1 | 49010252 | |
| 17 | Connection Wire | 1 | 4003004202 | |
| 18 | Jumper Cap | 1 | 4202300104 | |
| 19 | Main Board (Placa electrónica) | 1 | 30138000047 | CL96172 |
| 20 | Electric Box | 1 | 20112116 | |
| 21 | Electric Box Assy | 1 | 20102000186 | |
| 22 | Air Louver (upper) | 2 | 10512143 | |
| 23 | Swing lever | 2 | 10582096 | |
| 24 | Shaft of Guide Louver | 2 | 10542020 | |
| 25 | Water Tray Assy | 1 | 20182141 | |
| 26 | Air Louver (lower) | 2 | 10512144 | |
| 27 | Axis (lower step motor) | 1 | 10542034 | |
| 28 | Step Motor (Motor lamas) | 1 | 1521210805 | CL96173 |
| 29 | Connecting Cable | 0 | 4002052317 | |
| 30 | Temperature Sensor (Sensor de temperatura de tubería) | 1 | 390000591 | CL98667 |
| 31 | Remote Controller (Control remoto) | 1 | 30510134 | CL96174 |
| 32 | Ambient Temperature Sensor (Sensor de temp. ambiente) | 1 | 390000451 | CL98668 |

**MUSTR-09-H3M**
**CL20830**

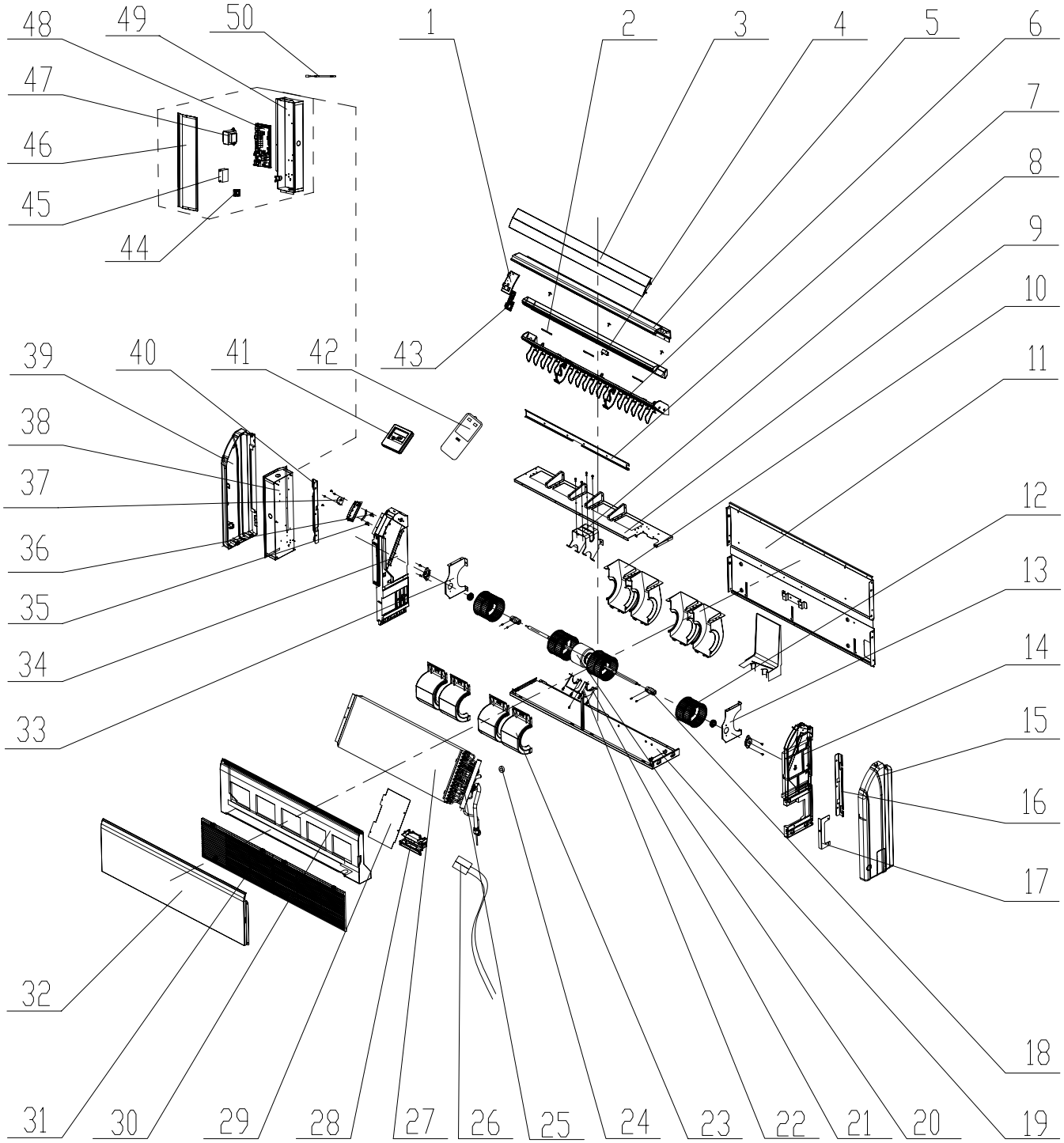

## MUSTR-09-H3M
**CL20830**

| Nº | Descripción | Ud. | Ref. Proveedor | Código |
|---|---|---|---|---|
| 1 | Fixed Mount | 1 | 26909426R | |
| 2 | Louver Clamp | 2 | 26112127 | |
| 3 | Guide Louver | 2 | 10619403 | |
| 4 | Rotating Shaft | 4 | 26909430 | |
| 5 | Front Connection Board | 1 | 01349414P | |
| 6 | Base Frame | 1 | 26909448 | |
| 7 | Induced air plate subassembly | 1 | 02229418 | |
| 8 | Supporter | 1 | 01805288 | |
| 9 | Mid Clapboard Sub-assy | 1 | 01249427 | |
| 10 | Front Volute Casing | 4 | 26905205 | |
| 11 | Rear Side Plate Assy | 1 | 01319445 | |
| 12 | Centrifugal Fan (Ventilador centrifugo) | 4 | 10425200 | CL98331 |
| 13 | Supporter | 1 | 01809417 | |
| 14 | Right Side Plate Sub-Assy | 1 | 01319429 | |
| 15 | Right Cover Plate | 1 | 26909444 | |
| 16 | Installation Supporting Frame | 1 | 01809402 | |
| 17 | Connection Board | 1 | 02229406 | |
| 18 | Joint Slack | 2 | 73018731 | |
| 19 | Rear Connection board | 1 | 01349416 | |
| 20 | Fan Motor (Motor ventilador) | 1 | 1570940901 | CL96188 |
| 21 | Bar Clasp | 1 | 70818405 | |
| 22 | Bar Clasp sub-assy | 1 | 70815201 | |
| 23 | Rear Volute Casing | 4 | 26905206 | |
| 24 | Cable Cross Loop | 1 | 76513101 | |
| 25 | Filter | 1 | 07216221 | |
| 26 | Temperature Sensor | 1 | 3900019822 | |
| 27 | Evaporator Assy | 1 | 01029482 | |
| 28 | Plate Board of Water Releasing Flume | 1 | 26909442 | |
| 29 | Connection Board | 1 | 01344115 | |
| 30 | Water Tray Assy | 1 | 01289404 | |
| 31 | Front Grill sub-assy | 2 | 01579403 | |
| 32 | Top Cover Board Sub-assy | 1 | 01269409 | |
| 33 | Supporter | 1 | 01809418 | |
| 34 | Left Side Plate Sub-Assy | 1 | 0131942801 | |
| 35 | Rotating Shaft | 1 | 26909412 | |
| 36 | Rotating Shaft | 1 | 26909413 | |
| 37 | Stepping Motor (Motor lamas) | 1 | 1521240206 | CL98338 |
| 38 | Electric Box Assy | 1 | 01399517 | |
| 39 | Left Cover Plate | 1 | 26909443 | |
| 40 | Installation Supporting Frame | 1 | 01809401 | |
| 41 | Display Board | 1 | 30296317 | |
| 42 | Remote Controller | 1 | 305100491 | |
| 43 | Display Board | 1 | 30294220 | |
| 44 | Terminal Board | 1 | 420111041 | |
| 45 | Capacitor CBB61 | 1 | 33010089 | |
| 46 | Electric Box Cover | 1 | 01429420 | |
| 47 | Transformer | 1 | 4311023701 | |
| 48 | Main Board (Placa electrónica) | 1 | 30226350 | CL96685 |
| 49 | Electric Box | 1 | 01429419 | |
| 50 | Temperature Sensor | 1 | 390001978G | |

**MUSTR-12-H3M**
CL20831

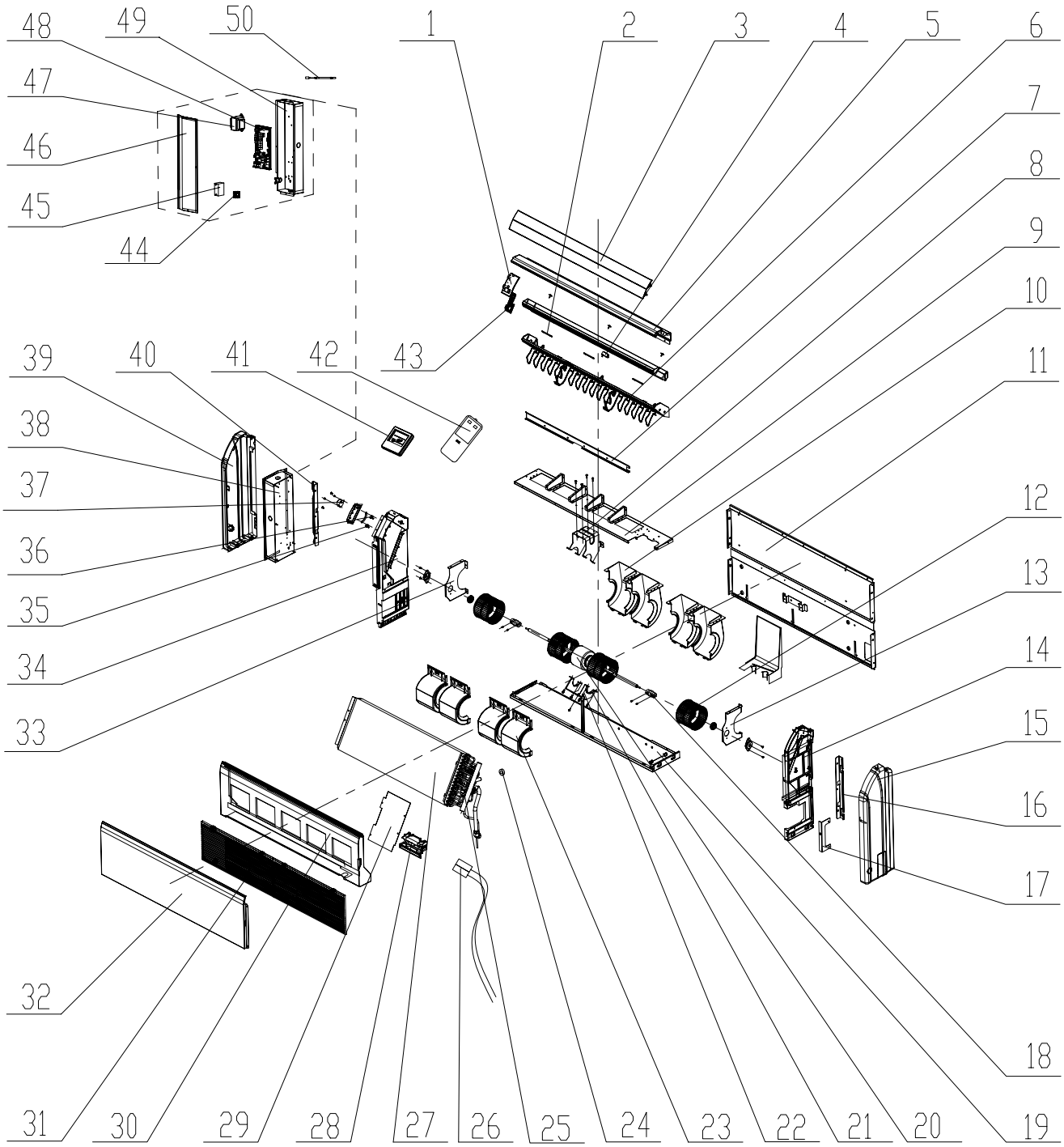

## MUSTR-12-H3M
CL20831

| Nº | Descripción | Ud. | Ref. Proveedor | Código |
|---|---|---|---|---|
| 1 | Fixed Mount | 1 | 26909426R | |
| 2 | Swing Louver | 2 | 26112127 | |
| 3 | Guide Louver | 2 | 10619403 | |
| 4 | Rotating Shaft | 4 | 26909430 | |
| 5 | Front Connection Board | 1 | 01349414P | |
| 6 | Base Frame | 1 | 26909448 | |
| 7 | Induced air plate subassembly | 1 | 02229418 | |
| 8 | Supporter | 2 | 26909449 | |
| 9 | Mid-clapboard sub-assy | 1 | 01249416 | |
| 10 | Front volute casing | 4 | 26905205 | |
| 11 | Rear side plate assy | 1 | 01319430 | |
| 12 | Centrifugal fan (Ventilador centrifugo) | 4 | 10425200 | CL98331 |
| 13 | Supporter | 1 | 01809417 | |
| 14 | Right Side Plate Sub-Assy | 1 | 01319429 | |
| 15 | Right Cover Plate | 1 | 26909444 | |
| 16 | Left Pensile Bracket | 1 | 01809401 | |
| 17 | Connection Board | 1 | 01344115 | |
| 18 | Joint Slack | 2 | 73018731 | |
| 19 | Rear Connection board | 1 | 01349416 | |
| 20 | Fan Motor (Motor ventilador) | 1 | 1570940901 | CL96188 |
| 21 | Bar Clasp | 1 | 70818405 | |
| 22 | Bar Clasp sub-assy | 1 | 70815201 | |
| 23 | Rear volute casing | 4 | 26905206 | |
| 24 | Cable-Cross Loop | 4 | 76510021 | |
| 25 | Filter | 1 | 07216221 | |
| 26 | Temperature Sensor (Sensor de temperatura de tubería) | 1 | 3900020723 | CL96684 |
| 27 | Evaporator Assy | 1 | 01029475 | |
| 28 | Fixed Plate | 1 | 26909442 | |
| 29 | Connection Board | 1 | 02229406 | |
| 30 | Water Tray Assy | 1 | 01289404 | |
| 31 | Front Grill sub-assy | 2 | 01579403 | |
| 32 | Top Cover Board Sub-assy | 1 | 01269409 | |
| 33 | Supporter | 1 | 01809418 | |
| 34 | Left Side Plate Sub-Assy | 1 | 0131942801 | |
| 35 | Rotating Shaft | 1 | 26909412 | |
| 36 | Rotating Shaft | 1 | 26909413 | |
| 37 | Step Motor (Motor lamas) | 1 | 1521240206 | CL98338 |
| 38 | Electric Box Assy | 1 | 01399517 | |
| 39 | Left Cover Plate | 1 | 26909443 | |
| 40 | Right Pensile Bracket | 1 | 01809402 | |
| 41 | Display Board (Placa display) | 1 | 30296317 | CL96106 |
| 42 | Remote Controller (Control remoto) | 1 | 305100492 | CL98052 |
| 43 | Display Board | 1 | 30294220 | |
| 44 | Terminal Board | 1 | 42010178 | |
| 45 | Capacitor CBB611A 1uF/450V | 1 | 33010089 | |
| 46 | Electric Box Cover | 1 | 01429420 | |
| 47 | Transformer | 1 | 4311023701 | |
| 48 | Main Board (Placa electrónica) | 1 | 30226350 | CL96685 |
| 49 | Electric Box | 1 | 01429419 | |
| 50 | Ambient Temperature Sensor (Sensor de temp. ambiente) | 1 | 39000191 | CL98376 |
| | Axile Bush | 2 | 10542704 | |
| | Connecting Rod | 1 | 26909411 | |
| | Drainage Pipe Sub-assy | 1 | 05235434 | |
| | Air Louver | 16 | 10619404 | |
| | Supporter | 1 | 01805288 | |

**MUSTR-18-H3M**
**CL20832**

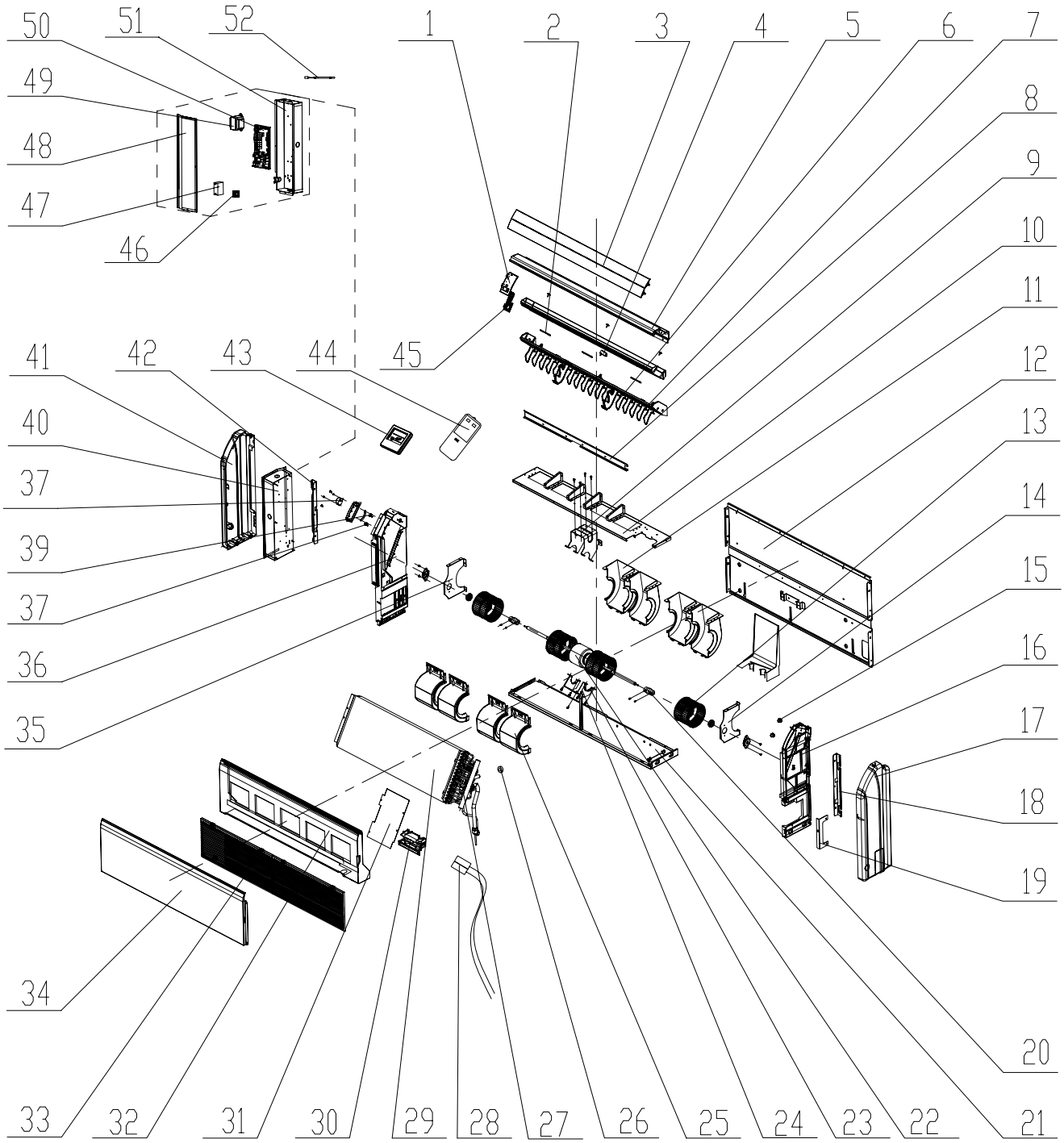

## MUSTR-18-H3M
CL20832

| Nº | Descripción | Ud. | Ref. Proveedor | Código |
|---|---|---|---|---|
| 1 | Fixed Mount | 1 | 26909426R | |
| 2 | Swing Louver | 2 | 26112127 | |
| 3 | Guide Louver | 2 | 10619403 | |
| 4 | Rotating Shaft | 4 | 26909430 | |
| 5 | Front Connection Board | 1 | 01349414P | |
| 6 | Air Louver | 16 | 10619404 | |
| 7 | Base Frame | 1 | 26909448 | |
| 8 | Induced air plate subassembly | 1 | 02229418 | |
| 9 | Supporter | 2 | 26909449 | |
| 10 | Mid-clapboard sub-assy | 1 | 01249416 | |
| 11 | Front volute casing | 4 | 26905205 | |
| 12 | Rear side plate assy | 1 | 01319430 | |
| 13 | Centrifugal fan (Ventilador centrifugo) | 4 | 10425200 | CL98331 |
| 14 | Supporter | 1 | 01809417 | |
| 15 | Axile Bush | 2 | 10542704 | |
| 16 | Right Side Plate Sub-Assy | 1 | 01319429 | |
| 17 | Right Cover Plate | 1 | 26909444 | |
| 18 | Left Pensile Bracket | 1 | 01809401 | |
| 19 | Connection Board | 1 | 01344115 | |
| 20 | Joint Slack | 2 | 73018731 | |
| 21 | Rear Connection board | 1 | 01349416 | |
| 22 | Fan Motor (Motor ventilador) | 1 | 15704111 | CL96194 |
| 23 | Bar Clasp | 1 | 70818405 | |
| 24 | Bar Clasp sub-assy | 1 | 70815201 | |
| 25 | Rear volute casing | 4 | 26905206 | |
| 26 | Cable-Cross Loop | 4 | 76510021 | |
| 27 | Filter | 1 | 07216221 | |
| 28 | Temperature Sensor (Sensor de temperatura de tubería) | 1 | 3900020723 | CL96684 |
| 29 | Evaporator Assy | 1 | 01029469 | |
| 30 | Fixed Plate | 1 | 26909442 | |
| 31 | Connection Board | 1 | 02229406 | |
| 32 | Water Tray Assy | 1 | 01289404 | |
| 33 | Front Grill sub-assy | 2 | 01579403 | |
| 34 | Top Cover Board Sub-assy | 1 | 01269409 | |
| 35 | Supporter | 1 | 01809418 | |
| 36 | Left Side Plate Sub-Assy | 1 | 0131942801 | |
| 37 | Rotating Shaft | 1 | 26909412 | |
| 38 | Rotating Shaft | 1 | 26909413 | |
| 39 | Step Motor (Motor lamas) | 1 | 1521240206 | CL98338 |
| 40 | Electric Box Assy | 1 | 01399511 | |
| 41 | Left Cover Plate | 1 | 26909443 | |
| 42 | Right Pensile Bracket | 1 | 01809402 | |
| 43 | Display Board (Placa display) | 1 | 30296317 | CL96106 |
| 44 | Remote Controller (Control remoto) | 1 | 305100492 | CL98052 |
| 45 | Display Board | 1 | 30294220 | |
| 46 | Terminal Board | 1 | 42010178 | |
| 47 | Capacitor CBB61 2.5uF/450V | 1 | 33010026 | |
| 48 | Electric Box Cover | 1 | 01429420 | |
| 49 | Transformer | 1 | 4311023701 | |
| 50 | Main Board (Placa electrónica) | 1 | 30226350 | CL96685 |
| 51 | Electric Box | 1 | 01429419 | |
| 52 | Ambient Temperature Sensor (Sensor de temp. ambiente) | 1 | 39000191 | CL98376 |
| | Connecting Rod | 1 | 26909411 | |
| | Drainage Pipe Sub-assy | 1 | 05235434 | |
| | Supporter | 1 | 01805288 | |

**MUSTR-24-H3M**
**CL20833**

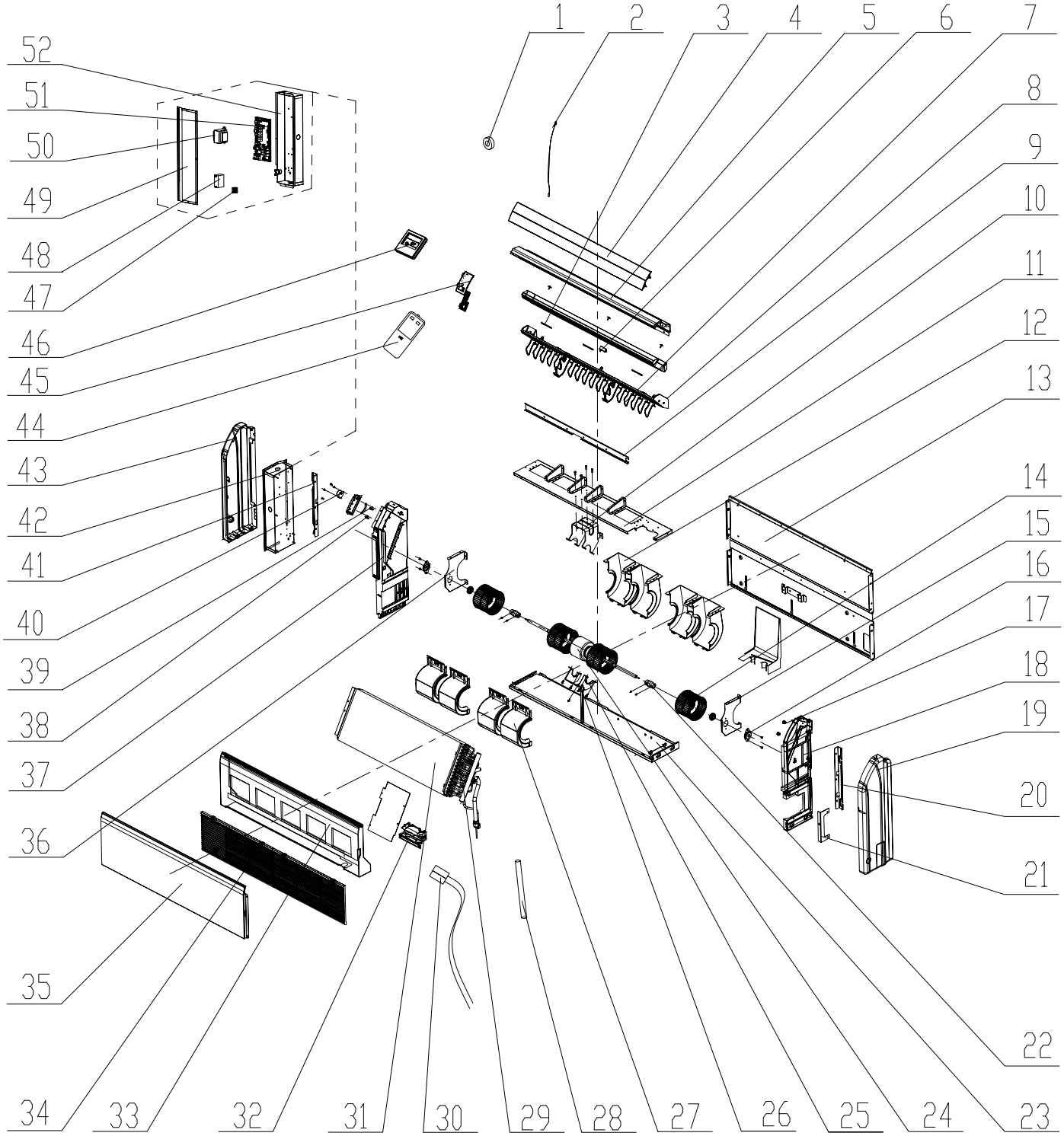

## MUSTR-24-H3M
CL20833

| Nº | Descripción | Ud. | Ref. Proveedor | Código |
|---|---|---|---|---|
| 1 | Cable-Cross Loop | 4 | 76510021 | |
| 2 | Ambient Temperature Sensor | 1 | 39000191 | |
| 3 | Swing Louver | 2 | 26112127 | |
| 4 | Guide Louver | 2 | 10619403 | |
| 5 | Front Connection Board | 1 | 01349414P | |
| 6 | Rotating Shaft | 4 | 26909430 | |
| 7 | Air Louver | 16 | 10619404 | |
| 8 | Base Frame | 1 | 26909448 | |
| 9 | Induced air plate subassembly | 1 | 02229418 | |
| 10 | Supporter | 2 | 26909449 | |
| 11 | Mid-clapboard sub-assy | 1 | 01249416 | |
| 12 | Front volute casing | 4 | 26905205 | |
| 13 | Rear side plate assy | 1 | 01319430 | |
| 14 | Centrifugal fan (Ventilador centrifugo) | 4 | 10425200 | CL98331 |
| 15 | Supporter | 1 | 01809417 | |
| 16 | Support Of Motor Bearing | 2 | 01792408 | |
| 17 | Axile Bush | 2 | 10542704 | |
| 18 | Right Side Plate Sub-Assy | 1 | 01319429 | |
| 19 | Right Cover Plate | 1 | 26909444 | |
| 20 | Left Pensile Bracket | 1 | 01809401 | |
| 21 | Connection Board | 1 | 02229406 | |
| 22 | Joint Slack | 2 | 73018731 | |
| 23 | Rear Connection board | 1 | 01349416 | |
| 24 | Fan Motor (Motor ventilador) | 1 | 15709409 | CL96195 |
| 25 | Bar Clasp | 1 | 70818405 | |
| 26 | Bar Clasp sub-assy | 1 | 70815201 | |
| 27 | Rear volute casing | 4 | 26905206 | |
| 28 | Drainage Pipe Sub-assy | 1 | 05235434 | |
| 29 | Filter | 1 | 07212001 | |
| 30 | Temperature Sensor (Sensor de temperatura de tubería) | 1 | 3900020723 | CL96684 |
| 31 | Evaporator Assy | 1 | 01029474 | |
| 32 | Fixed Plate | 1 | 26909442 | |
| 33 | Water Tray Assy | 1 | 01289404 | |
| 34 | Front Grill sub-assy | 2 | 01579403 | |
| 35 | Top Cover Board Sub-assy | 1 | 01269409 | |
| 36 | Supporter | 1 | 01809418 | |
| 37 | Left Side Plate Sub-Assy | 1 | 0131942801 | |
| 38 | Rotating Shaft | 1 | 26909412 | |
| 39 | Rotating Shaft | 1 | 26909413 | |
| 40 | Step Motor (Motor lamas) | 1 | 1521240206 | CL98338 |
| 41 | Right Pensile Bracket | 1 | 01809402 | |
| 42 | Electric Box Assy | 1 | 01399518 | |
| 43 | Left Cover Plate | 1 | 26909443 | |
| 44 | Remote Controller (Control remoto) | 1 | 305100492 | CL98052 |
| 45 | Display Board | 1 | 30294220 | |
| 46 | Display Board (Placa display) | 1 | 30296317 | CL96106 |
| 47 | Terminal Board | 1 | 42010178 | |
| 48 | Capacitor CBB611A(3uF/450V) | 1 | 33010027 | |
| 49 | Electric Box Cover | 1 | 01429420 | |
| 50 | Transformer | 1 | 4311023701 | |
| 51 | Main Board (Placa electrónica) | 1 | 30226350 | CL96685 |
| 52 | Electric Box | 1 | 01429419 | |
| | Connecting Rod | 1 | 26909411 | |
| | Supporter | 1 | 01805288 | |

## MUCR-09-H3M
CL20834

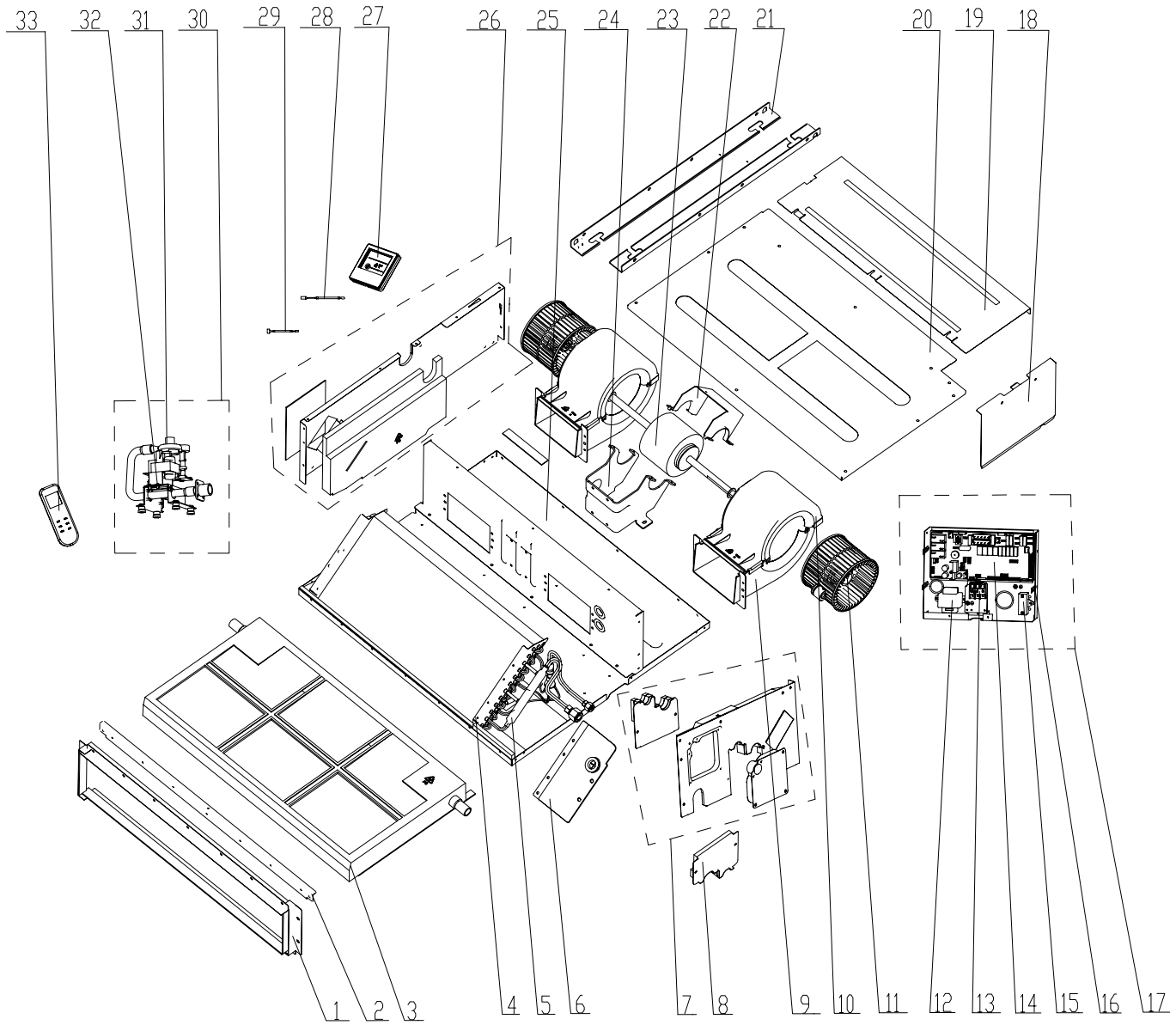

## MUCR-09-H3M
**CL20834**

| Nº | Descripción | Ud. | Ref. Proveedor | Código |
|---|---|---|---|---|
| 1 | Air outlet frame assy | 1 | 01865216 | |
| 2 | Cover of Air Outlet | 1 | 01265298 | |
| 3 | Water Tray Assy | 1 | 01285332 | |
| 4 | Top Cover Assy | 1 | 01265325 | |
| 5 | Evaporator Assy | 1 | 01024266 | |
| 6 | Seal of Evaporator Assy | 1 | 01495317 | |
| 7 | Left Side Plate Assy | 1 | 01315334 | |
| 8 | Seal of Letout Pipe Assy | 1 | 01495316 | |
| 9 | Front volute casing | 2 | 26905205 | |
| 10 | Rear volute casing | 2 | 26905206 | |
| 11 | Centrifugal Fan (Ventilador centrífugo) | 2 | 10425200 | CL98331 |
| 12 | Transformer 48X26G | 1 | 43110233 | |
| 13 | Terminal Board | 1 | 420111041 | |
| 14 | Main Board (Placa electrónica) | 1 | 30226338 | CL96162 |
| 15 | Capacitor | 1 | 33010020 | |
| 16 | Electric Box Sub-Assy | 1 | 01395100 | |
| 17 | Electric Box Assy | 1 | 01395980 | |
| 18 | Electric Box Cover | 1 | 01424253 | |
| 19 | Cover Of Fan Motor | 1 | 01265300 | |
| 20 | Bottom Cover | 1 | 01265299 | |
| 21 | Supporter | 2 | 01895225 | |
| 22 | Bar Clasp sub-assy | 1 | 70815201 | |
| 23 | Fan Motor (Motor ventilador) | 1 | 1570520102 | CL96163 |
| 24 | Supporter | 1 | 01805288 | |
| 25 | Fan Mounting Plate Assy | 1 | 01325312 | |
| 26 | Right Side Plate Assy | 1 | 01315335 | |
| 27 | Display Board (Placa display) | 1 | 30296317 | CL96106 |
| 28 | Temperature Sensor (Sensor de temperatura de tubería) | 1 | 390001982G | CL96156 |
| 29 | Ambient Temperature Sensor (Sensor de temp. ambiente) | 1 | 39000206 | CL96164 |
| 30 | Water Pump Assy | 1 | 15405241 | |
| 31 | Water Level Switch (Interruptor de nivel) | 1 | 45010201 | CL96946 |
| 32 | Water Pump (Bomba de condensados) | 1 | 43130324 | CL98412 |
| 33 | Remote Controller (Control remoto) | 1 | 305100492 | CL98052 |
| | Connecting Cable | 1 | 40020523 | |
| | Choke Plug of Drain Pipe | 2 | 76815214 | |
| | Drain Hose Assy | 1 | 05232703 | |
| | Jumper | 1 | 4202300123 | |

## MUCR-12-H3M
CL20835

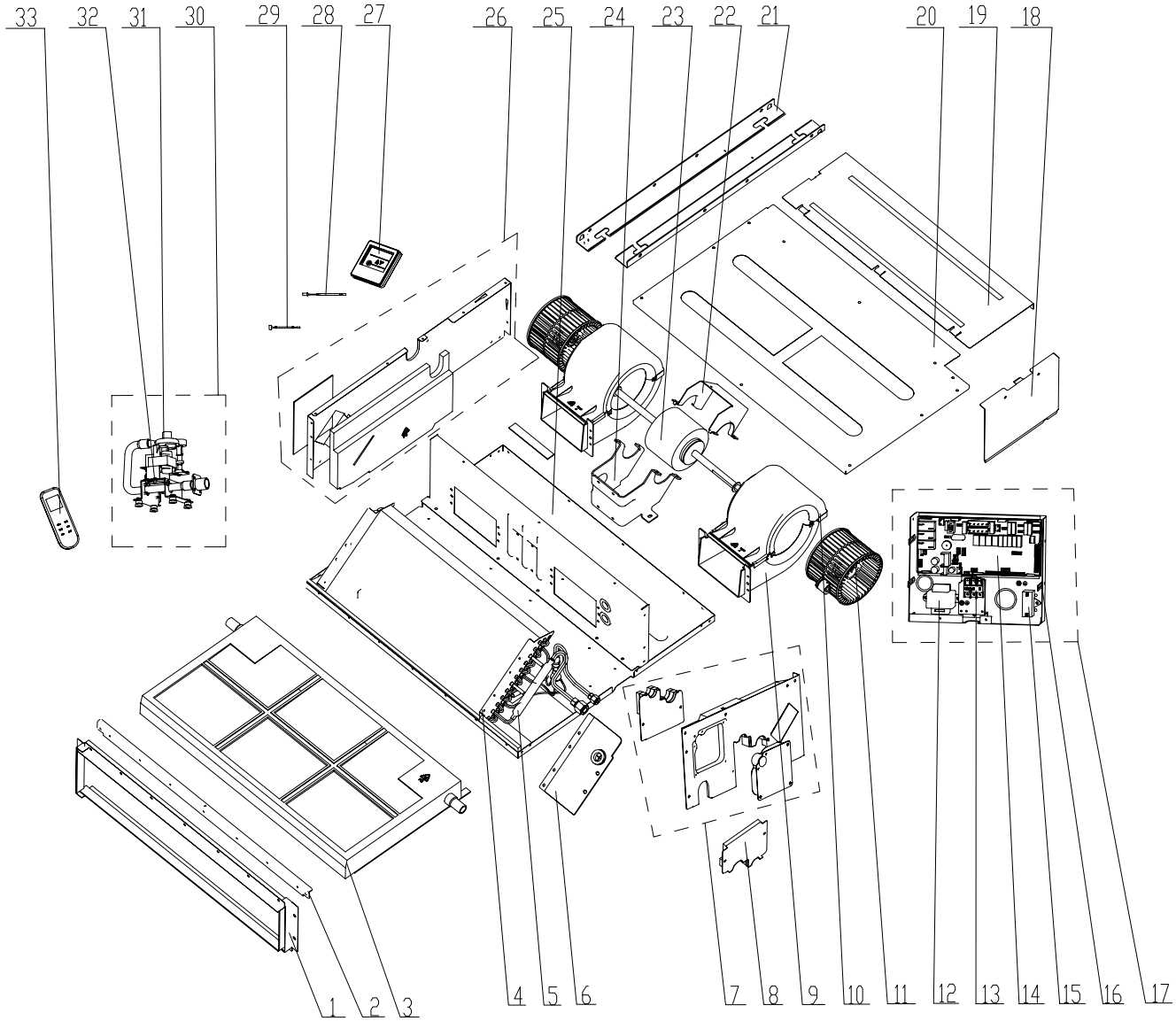

## MUCR-12-H3M
**CL20835**

| Nº | Descripción | Ud. | Ref. Proveedor | Código |
|---|---|---|---|---|
| 1 | Air outlet frame  assy | 1 | 01865216 | |
| 2 | Cover of Air Outlet | 1 | 01265298 | |
| 3 | Water Tray Assy | 1 | 01285332 | |
| 4 | Top Cover Assy | 1 | 01265325 | |
| 5 | Evaporator Assy | 1 | 01024267 | |
| 6 | Seal of Evaporator Assy | 1 | 01495317 | |
| 7 | Left Side Plate Assy | 1 | 01315334 | |
| 8 | Seal of Letout Pipe Assy | 1 | 01495316 | |
| 9 | Front volute casing | 2 | 26905205 | |
| 10 | Rear volute casing | 2 | 26905206 | |
| 11 | Centrifugal Fan (Ventilador centrífugo) | 2 | 10425200 | CL98331 |
| 12 | Transformer 48X26G | 1 | 43110233 | |
| 13 | Terminal Board | 1 | 420111041 | |
| 14 | Main Board (Placa electrónica) | 1 | 30226338 | CL96162 |
| 15 | Capacitor CBB611A(3uF/450V) | 1 | 33010027 | |
| 16 | Electric Box Sub-Assy | 1 | 01395100 | |
| 17 | Electric Box Assy | 1 | 01395983 | |
| 18 | Electric Box Cover | 1 | 01424253 | |
| 19 | Cover Of Fan Motor | 1 | 01265300 | |
| 20 | Bottom Cover | 1 | 01265299 | |
| 21 | Supporter | 2 | 01895225 | |
| 22 | Bar Clasp sub-assy | 1 | 70815201 | |
| 23 | Fan Motor (Motor ventilador) | 1 | 1570520104 | CL96165 |
| 24 | Supporter | 1 | 01805288 | |
| 25 | Fan Mounting Plate Assy | 1 | 0132531201 | |
| 26 | Right Side Plate Assy | 1 | 01315335 | |
| 27 | Display Board | 1 | 30296317 | CL96106 |
| 28 | Temperature Sensor (Sensor de temperatura de tubería) | 1 | 390001982G | CL96156 |
| 29 | Ambient Temperature Sensor (Sensor de temp. ambiente) | 1 | 39000206 | CL96164 |
| 30 | Water Pump Assy | 1 | 15405241 | |
| 31 | Water Level Switch (Interruptor de nivel) | 1 | 45010201 | CL96946 |
| 32 | Water Pump (Bomba de condensados) | 1 | 43130324 | CL98412 |
| 33 | Remote Controller (Control remoto) | 1 | 305100492 | CL98052 |
| | Choke Plug of Drain Pipe | 2 | 76815214 | |
| | Drain Hose Assy | 1 | 05232703 | |
| | Jumper | 1 | 4202300124 | |
| | Connecting Cable | 1 | 40020523 | |

## MUCR-18-H3M
CL20836

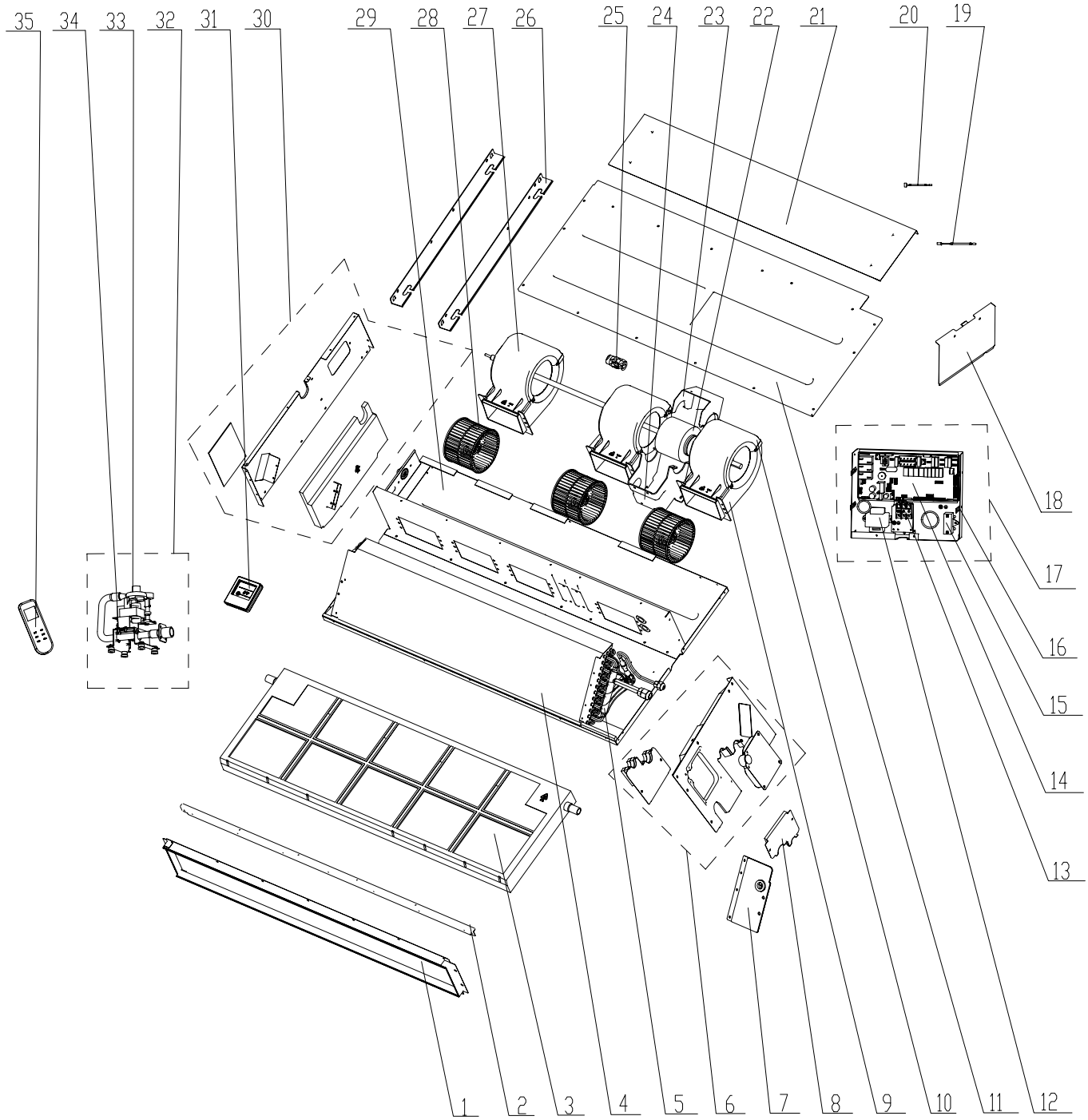

## MUCR-18-H3M
CL20836

| Nº | Descripción | Ud. | Ref. Proveedor | Código |
|---|---|---|---|---|
| 1 | Air outlet frame  assy | 1 | 01865217 | |
| 2 | Cover of air outlet | 1 | 01265331 | |
| 3 | Water Tray Assy | 1 | 01285333 | |
| 4 | Evaporator Assy | 1 | 01024268 | |
| 5 | Top Cover Board Assy | 1 | 01265328 | |
| 6 | Left Side Plate Assy | 1 | 01315334 | |
| 7 | Seal of Evaporator Assy | 1 | 01495317 | |
| 8 | Seal of Letout Pipe Assy | 1 | 01495316 | |
| 9 | Front volute casing | 3 | 26905205 | |
| 10 | Rear volute casing | 3 | 26905206 | |
| 11 | Bottom Cover Plate | 1 | 01265332 | |
| 12 | Transformer 48X26G | 1 | 43110233 | |
| 13 | Terminal Board | 1 | 420111041 | |
| 14 | Main Board (Placa electrónica) | 1 | 30226338 | CL96162 |
| 15 | Capacitor CBB611A(3uF/450V) | 1 | 33010027 | |
| 16 | Electric Box Sub-Assy | 1 | 01395100 | |
| 17 | Electric Box Assy | 1 | 01395984 | |
| 18 | Electric Box Cover | 1 | 01424253 | |
| 19 | Temperature Sensor (Sensor de temperatura de tubería) | 1 | 390001982G | CL96156 |
| 20 | Ambient Temperature Sensor (Sensor de temp. ambiente) | 1 | 39000206 | CL96164 |
| 21 | Cover Plate of the Fan | 1 | 01265333 | |
| 22 | Fan Motor (Motor ventilador) | 1 | 15705218 | CL96166 |
| 23 | Bar Clasp sub-assy | 1 | 70815201 | |
| 24 | Supporter | 1 | 01805288 | |
| 25 | Joint Slack | 1 | 73018731 | |
| 26 | Supporter | 2 | 01895225 | |
| 27 | Rotary Axis Sub-Assy | 1 | 73018020 | |
| 28 | Centrifugal Fan (Ventilador centrífugo) | 3 | 10425200 | CL98331 |
| 29 | Fan Mounting Plate Assy | 1 | 01325314 | |
| 30 | Right Side Plate Assy | 1 | 01305263 | |
| 31 | Display Board (Placa display) | 1 | 30296317 | CL96106 |
| 32 | Water Pump Assy | 1 | 15405241 | |
| 33 | Water Level Switch (Interruptor de nivel) | 1 | 45010201 | CL96946 |
| 34 | Water Pump (Bomba de condensados) | 1 | 43130324 | CL98412 |
| 35 | Remote Controller (Control remoto) | 1 | 305100492 | CL98052 |
| | Connecting Cable | 1 | 400205232 | |
| | Jumper | 1 | 4202300125 | |
| | Drain Hose Assy | 1 | 05232703 | |
| | Choke Plug of Drain Pipe | 2 | 76815214 | |

## MUCR-21-H3M
CL20837

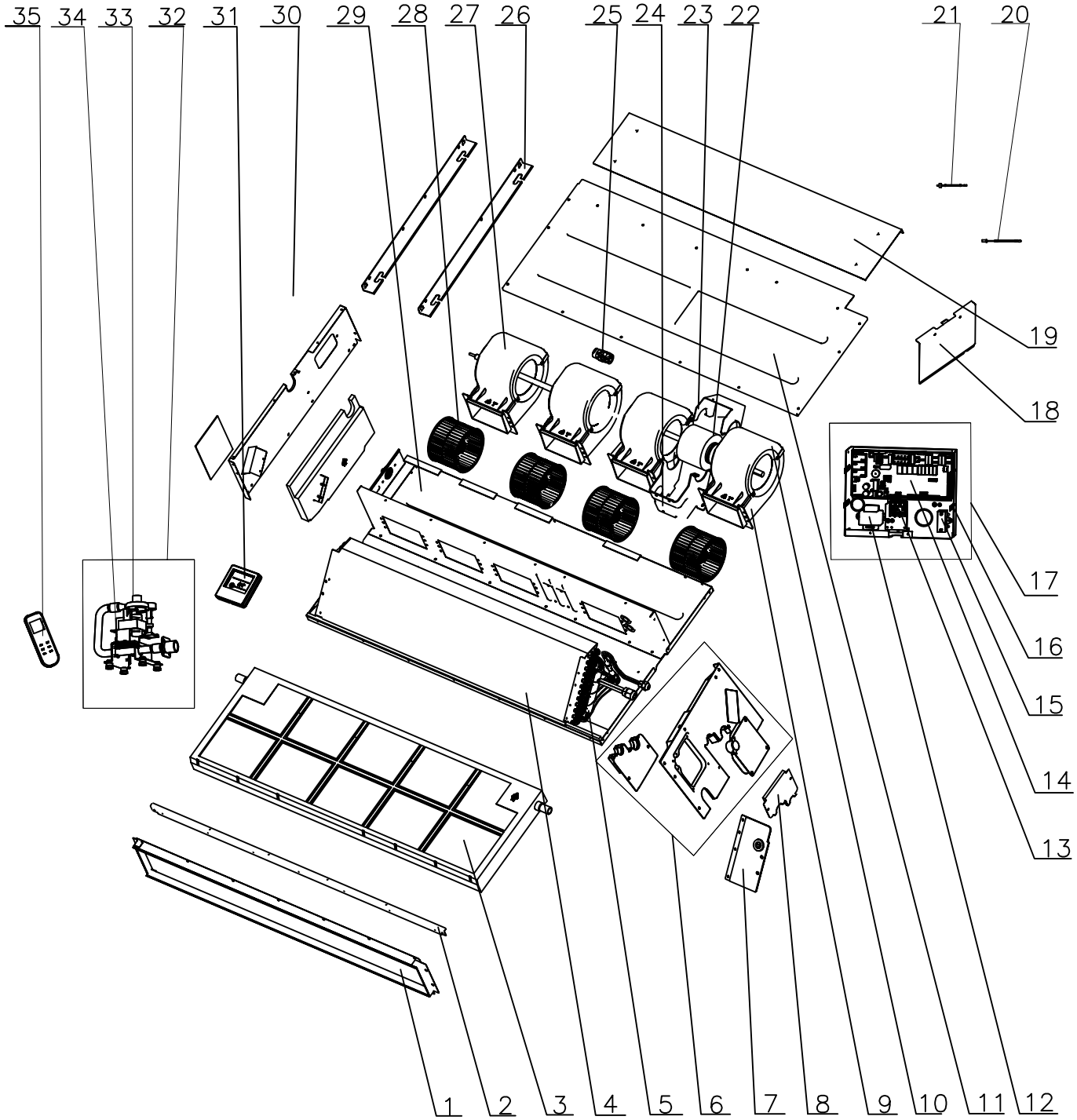

## MUCR-21-H3M
**CL20837**

| Nº | Descripción | Ud. | Ref. Proveedor | Código |
|---|---|---|---|---|
| 1 | Air Outlet Sub-Assy | 1 | 01375224 | |
| 2 | Cover Of Air-Out | 1 | 01265335 | |
| 3 | Water Tray Assy | 1 | 01285334 | |
| 4 | Evaporator Assy | 1 | 01024269 | |
| 5 | Top Cover Assy | 1 | 01265339 | |
| 6 | Left Side Plate Assy | 1 | 01315334 | |
| 7 | Seal of Evaporator Assy | 1 | 01495317 | |
| 8 | Seal of Letout Pipe Assy | 1 | 01495316 | |
| 9 | Front volute casing | 4 | 26905205 | |
| 10 | Rear volute casing | 4 | 26905206 | |
| 11 | Bottom Cover | 1 | 01265337 | |
| 12 | Transformer 48X26G | 1 | 43110233 | |
| 13 | Terminal Board | 1 | 420111041 | |
| 14 | Main Board (Placa electrónica) | 1 | 30226338 | CL96162 |
| 15 | Capacitor CBB611A(3uF/450V) | 1 | 33010027 | |
| 16 | Electric Box Sub-Assy | 1 | 01395100 | |
| 17 | Electric Box Assy | 1 | 01395985 | |
| 18 | Electric Box Cover | 1 | 01424253 | |
| 19 | Cover Of Fan Motor | 1 | 01265338 | |
| 20 | Temperature Sensor (Sensor de temperatura de tubería) | 1 | 390001982G | CL96156 |
| 21 | Ambient Temperature Sensor (Sensor de temp. ambiente) | 1 | 39000206 | CL96164 |
| 22 | Fan Motor (Motor ventilador) | 1 | 1570411102 | CL96167 |
| 23 | Bar Clasp sub-assy | 1 | 70815201 | |
| 24 | Supporter | 1 | 01805288 | |
| 25 | Joint Slack | 1 | 73018731 | |
| 26 | Supporter | 2 | 01895225 | |
| 27 | Rotary Axis Sub-Assy | 1 | 73018022 | |
| 28 | Centrifugal Fan (Ventilador centrífugo) | 4 | 10425200 | CL98331 |
| 29 | Fan Mounting Plate Assy | 1 | 01325316 | |
| 30 | Right Side Plate Assy | 1 | 01305263 | |
| 31 | Display Board (Placa display) | 1 | 30296317 | CL96106 |
| 32 | Water Pump Assy | 1 | 15405241 | |
| 33 | Water Level Switch (Interruptor de nivel) | 1 | 45010201 | CL96946 |
| 34 | Water Pump (Bomba de condensados) | 1 | 43130324 | CL98412 |
| 35 | Remote Controller (Control remoto) | 1 | 305100492 | CL98052 |
| | Filter Sub-assy | 1 | 07210028 | |
| | Connecting Cable | 1 | 400205232 | |
| | Filter | 1 | 07212001 | |

## MUCR-24-H3M
CL20838

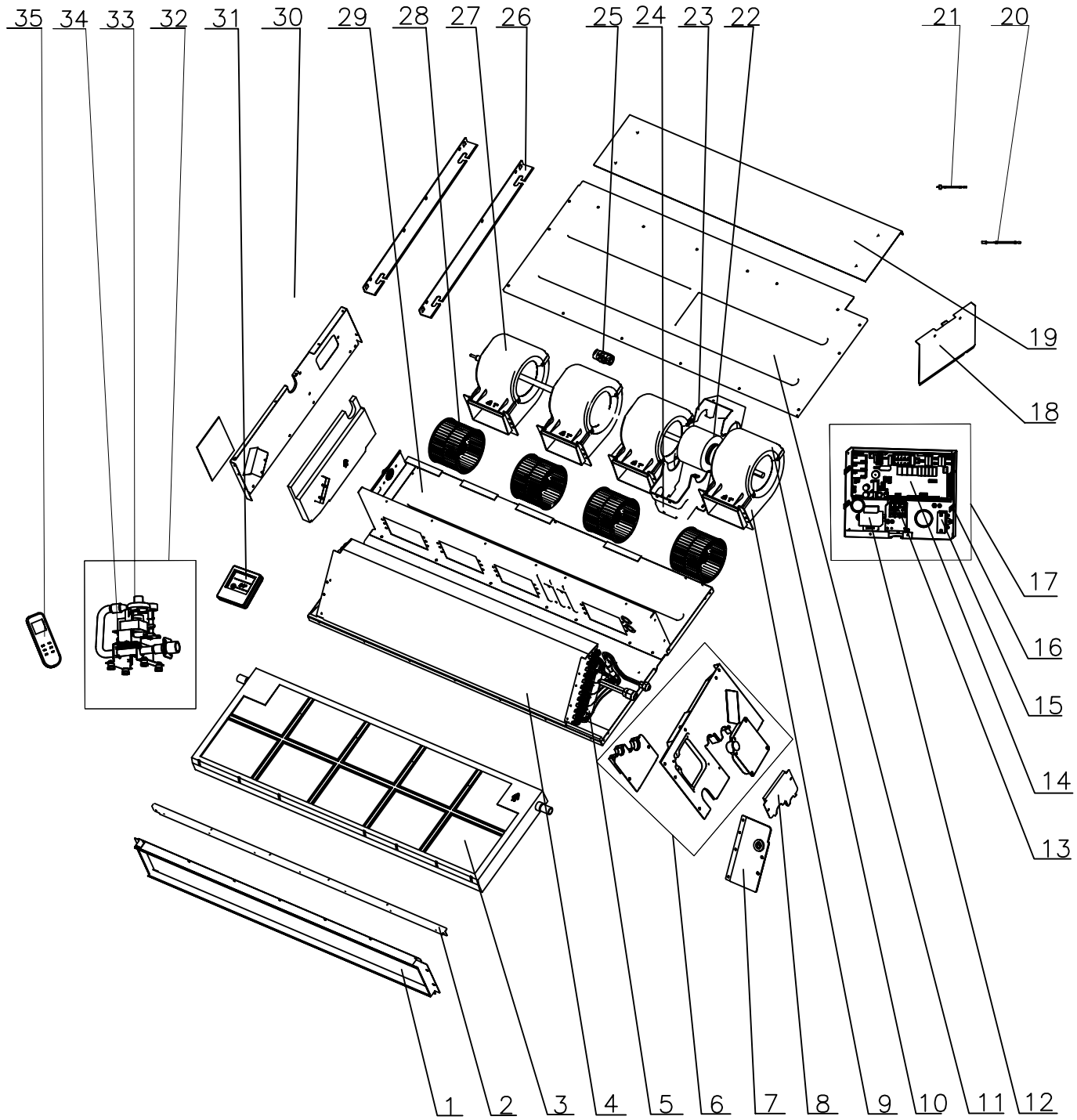

## MUCR-24-H3M
CL20838

| Nº | Descripción | Ud. | Ref. Proveedor | Código |
|---|---|---|---|---|
| 1 | Air Outlet Sub-Assy | 1 | 01375224 | |
| 2 | Cover Of Air-Out | 1 | 01265335 | |
| 3 | Water Tray Assy | 1 | 01285334 | |
| 4 | Evaporator Assy | 1 | 01024269 | |
| 5 | Top Cover Assy | 1 | 01265339 | |
| 6 | Left Side Plate Assy | 1 | 01315334 | |
| 7 | Seal of Evaporator Assy | 1 | 01495317 | |
| 8 | Seal of Letout Pipe Assy | 1 | 01495316 | |
| 9 | Front volute casing | 4 | 26905205 | |
| 10 | Rear volute casing | 4 | 26905206 | |
| 11 | Bottom Cover | 1 | 01265337 | |
| 12 | Transformer 48X26G | 1 | 43110233 | |
| 13 | Terminal Board | 1 | 420111041 | |
| 14 | Main Board (Placa electrónica) | 1 | 30226338 | CL96162 |
| 15 | Capacitor CBB611A(3uF/450V) | 1 | 33010027 | |
| 16 | Electric Box Sub-Assy | 1 | 01395100 | |
| 17 | Electric Box Assy | 1 | 01395985 | |
| 18 | Electric Box Cover | 1 | 01424253 | |
| 19 | Cover Of Fan Motor | 1 | 01265338 | |
| 20 | Ambient Temperature Sensor (Sensor de temp. ambiente) | 1 | 39000206 | CL96164 |
| 21 | Temperature Sensor (Sensor de temperatura de tubería) | 1 | 390001982G | CL96156 |
| 22 | Fan Motor (Motor ventilador) | 1 | 1570411102 | CL96167 |
| 23 | Bar Clasp sub-assy | 1 | 70815201 | |
| 24 | Supporter | 1 | 01805288 | |
| 25 | Joint Slack | 1 | 73018731 | |
| 26 | Supporter | 2 | 01895225 | |
| 27 | Rotary Axis Sub-Assy | 1 | 73018022 | |
| 28 | Centrifugal Fan (Ventilador centrífugo) | 4 | 10425200 | CL98331 |
| 29 | Fan Mounting Plate Assy | 1 | 01325316 | |
| 30 | Right Side Plate Assy | 1 | 01305263 | |
| 31 | Display Board (Placa display) | 1 | 30296317 | CL96106 |
| 32 | Water Pump Assy | 1 | 15405241 | |
| 33 | Water Level Switch (Interruptor de nivel) | 1 | 45010201 | CL96946 |
| 34 | Water Pump (Bomba de condensados) | 1 | 43130324 | CL98412 |
| 35 | Remote Controller (Control remoto) | 1 | 305100492 | CL98052 |
| | Filter Sub-assy | 1 | 07210028 | |
| | Filter | 1 | 07212001 | |
| | Connecting Cable | 1 | 400205232 | |

# COMERCIAL H3

## Despiece

# MUCSR-H3
# MUSTR-H3
# MUCR-H3

**UE20842 - MUCSR-12-H3**
**UE20862 - MUCR-12-H3**

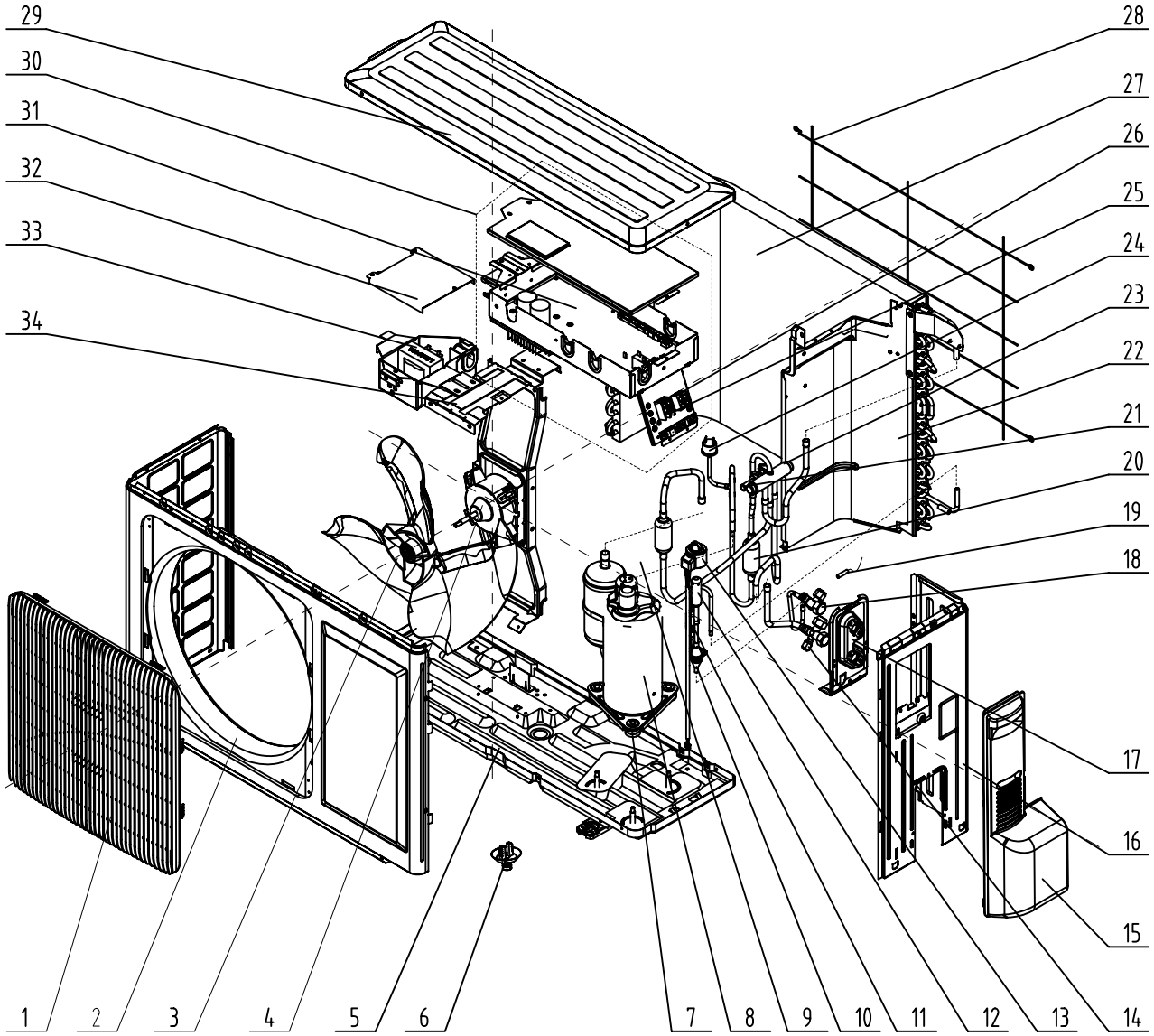

**UE20842 - MUCSR-12-H3**
**UE20862 - MUCR-12-H3**

| Nº | Descripción | Ud. | Ref. Proveedor | Código |
|---|---|---|---|---|
| 1 | Front Grill | 1 | 22413433 | |
| 2 | Front Panel | 1 | 0153303204P | |
| 3 | Axial Flow Fan | 1 | 10333012 | CL96196 |
| 4 | Brushless DC Motor | 1 | 15709400007 | CL96197 |
| 5 | Chassis Sub-assy | 1 | 0280301701P | |
| 6 | Drainage Connecter | 1 | 06123401 | |
| 7 | Compressor Gasket | 3 | 76710302 | |
| 8 | Compressor and Fittings | 1 | 00103896 | CL96199 |
| 9 | Compressor Overload Proctector(External) | 1 | 00180030 | |
| 10 | Strainer A | 1 | 07415200002 | |
| 11 | Strainer | 1 | 0721304401 | |
| 12 | Electronic Expansion Valve | 1 | 43042800008 | CL96205 |
| 13 | Electronic Expansion Valve Fittings | 1 | 4304413208 | CL98398 |
| 14 | Valve | 1 | 07100005 | |
| 15 | Big Handle | 1 | 26233433 | |
| 16 | Right Side Plate Assy | 1 | 0130200404 | |
| 17 | Valve Support | 1 | 01713041 | |
| 18 | Cut-off Valve | 1 | 07130239 | |
| 19 | Temperature Sensor | 1 | 39000310G | |
| 20 | Silencer Mounting | 1 | 07245007 | |
| 21 | Magnet Coil | 1 | 4300040033 | |
| 22 | Clapboard Sub-Assy | 1 | 01233034 | |
| 23 | 4-Way Valve | 1 | 430004022 | |
| 24 | Pressure Protect Switch | 1 | 46020003 | |
| 25 | Terminal Board | 1 | 4201115404 | |
| 26 | Terminal Board | 1 | 420101852 | |
| 27 | Condenser Assy | 1 | 01125200195 | |
| 28 | Rear Grill | 1 | 01473057 | |
| 29 | Top Cover Plate | 1 | 01253443 | |
| 30 | Electric Box Assy | 1 | 01395200256 | CL96211 |
| 31 | Main Board | 1 | 30224000033 | CL96212 |
| 32 | Cover of Reactor Box | 1 | 01413029 | |
| 33 | Reactor | 1 | 43130185 | |
| 34 | Motor Support Sub-Assy | 1 | 01703101 | |
| | Drain joint (Pipeta) | 1 | 06123401 | CL98073 |
| | Seal ring (Junta Pipeta) | 1 | 26113009 | CL98072 |

**UE20843 - MUCSR-18-H3**
**UE20853 - MUCSTR-18-H3**
**UE20863 - MUCR-18-H3**

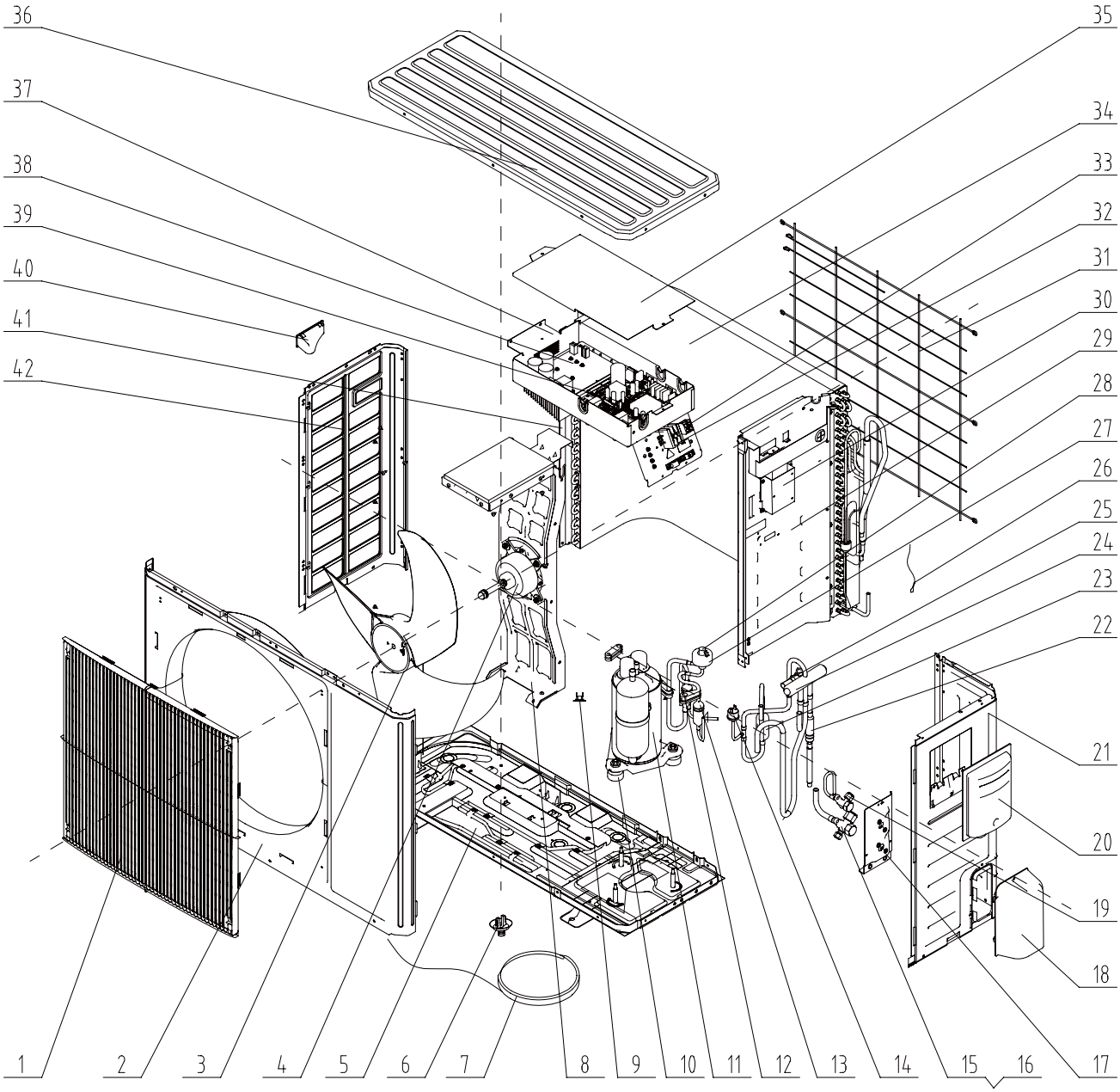

**UE20843 - MUCSR-18-H3**
**UE20853 - MUCSTR-18-H3**
**UE20863 - MUCR-18-H3**

| Nº | Descripción | Ud. | Ref. Proveedor | Código |
|---|---|---|---|---|
| 1 | Front Grill | 1 | 22415002 | |
| 2 | Front Panel | 1 | 01535013P | |
| 3 | Axial Flow Fan (Aspas Ventilador) | 1 | 10335008 | CL98326 |
| 4 | Fan Motor (Motor Ventilador) | 1 | 1570280204 | CL98344 |
| 5 | Chassis Sub-assy | 1 | 01195200015P | |
| 6 | Drainage Connecter | 1 | 06123401 | |
| 7 | Electric heater (compressor) | 1 | 7651300403 | |
| 8 | Motor Support Assy | 1 | 01805200173 | |
| 9 | Compressor Overload Proctector (External) | 1 | 00180030 | |
| 10 | Compressor Gasket | 3 | 76710247 | |
| 11 | Compressor and Fittings (Compresor) | 1 | 00105249G | CL98301 |
| 12 | Strainer | 1 | 0721004501 | |
| 13 | Filter | 1 | 07220019 | |
| 14 | Pressure Protect Switch | 1 | 46020003 | |
| 15 | Cut off Valve Sub-Assy | 1 | 07133060 | |
| 16 | Valve 1/2" | 1 | 071302392 | |
| 17 | Valve support assy | 1 | 01715010P | |
| 18 | Valve cover | 1 | 22245002 | |
| 19 | Cut-off Valve | 1 | 07130239 | |
| 20 | Handle | 1 | 26235254 | |
| 21 | Right Side Plate | 1 | 0130509402P | |
| 22 | Filter | 1 | 07212403 | |
| 23 | Silencer Mounting | 1 | 07245007 | |
| 24 | 4-Way Valve (Válvula 4 Vías) | 1 | 430004032 | CL98394 |
| 25 | Magnet Coil | 1 | 4300040033 | |
| 26 | Temperature Sensor (Sonda Temp.) | 1 | 3900028020G | CL98382 |
| 27 | Electric Expand Valve Fitting (Bobina-Cabezal) | 1 | 4300876706 | CL98395 |
| 28 | Electronic Expansion Valve (Cuerpo EXV) | 1 | 07134601 | CL98319 |
| 29 | Clapboard Sub-Assy | 1 | 01232902 | |
| 30 | Supporter | 1 | 01805405 | |
| 31 | Rear Grill | 1 | 01473043 | |
| 32 | Terminal Board | 1 | 420111451 | |
| 33 | Terminal Board | 1 | 420101852 | |
| 34 | Condenser Assy | 1 | 01113386 | |
| 35 | Electric Box Cover | 1 | 01425200044 | |
| 36 | Top Cover | 1 | 01255005P | |
| 37 | Electric Box Assy (Conjunto Eléctrico) | 1 | 01395200177 | CL98306 |
| 38 | IPM Board (Placa Inverter) | 1 | 30221000009 | CL98356 |
| 39 | Main Board (Placa Principal) | 1 | 30224000024 | CL98359 |
| 40 | Left Handle | 1 | 26235401 | |
| 41 | Supporting board (condenser) | 1 | 01795010 | |
| 42 | Left Side Plate | 1 | 01305093P | |
| | Filter Board (Placa Filtro) | 1 | 30221000008 | CL98056 |
| | Inductance (Inductancia) | 1 | 4312002001 | CL98387 |
| | Sensor support | 1 | 26905202 | |
| | Relay | 1 | 44020366 | |
| | Relay | 1 | 44020360 | |

**UE20844 - MUCSR-24-H3**
**UE20854 - MUCSTR-24-H3**
**UE20864 - MUCR-24-H3**

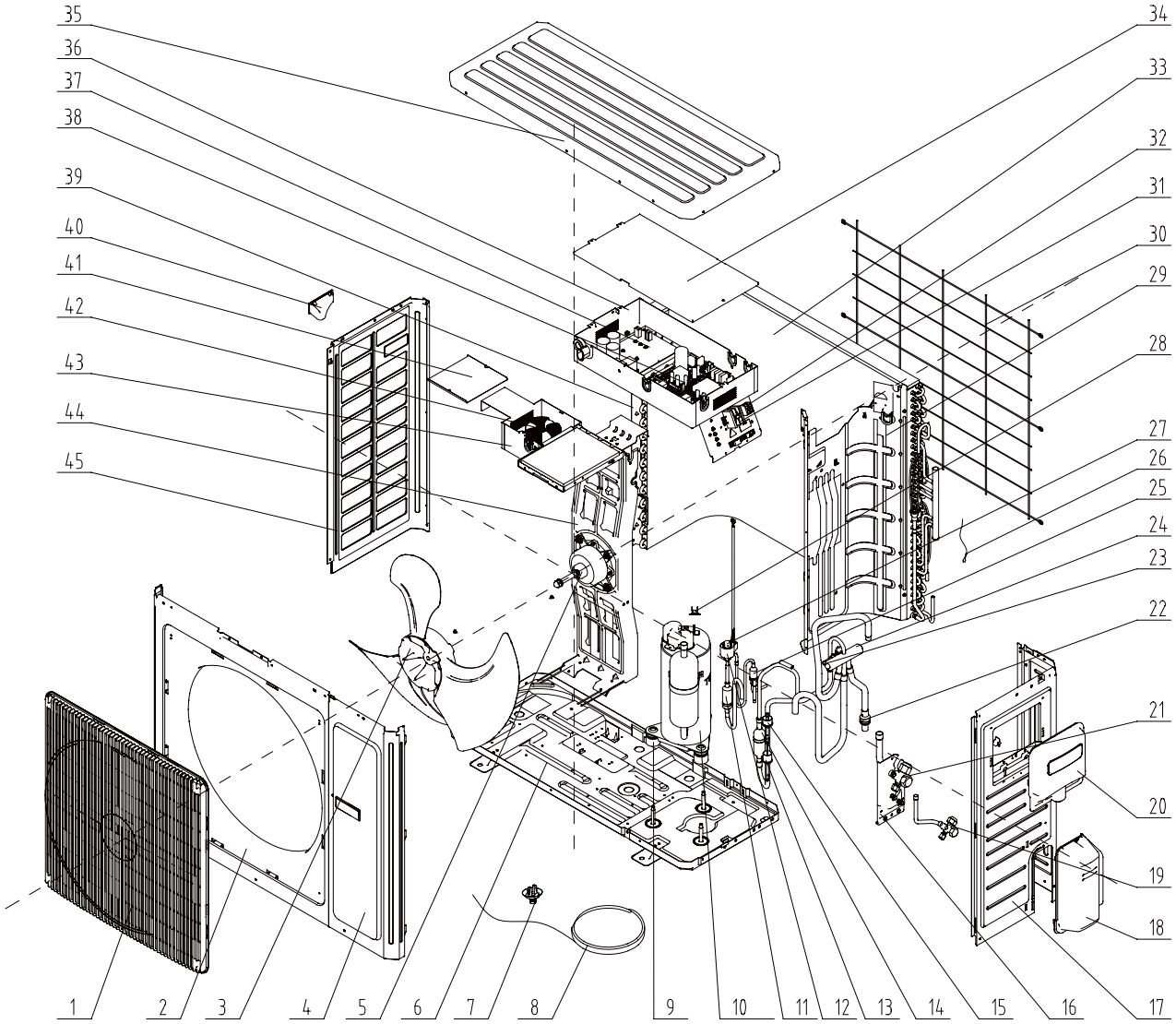

**UE20844 - MUCSR-24-H3**
**UE20854 - MUCSTR-24-H3**
**UE20864 - MUCR-24-H3**

| Nº | Descripción | Ud. | Ref. Proveedor | Código |
|---|---|---|---|---|
| 1 | Front Grill | 1 | 22415003 | |
| 2 | Cabinet | 1 | 01435004P | |
| 3 | Axial Flow Fan (Aspas Ventilador) | 1 | 10335014 | CL98328 |
| 4 | Front Side Plate | 1 | 01305086P | |
| 5 | Fan Motor (Motor Ventilador) | 1 | 15702802 | CL98342 |
| 6 | Chassis Sub-Assy | 1 | 0119520001301P | |
| 7 | Drainage Connecter | 1 | 06123401 | |
| 8 | electrical heater | 1 | 7651873209 | |
| 9 | Compressor Gasket | 1 | 76713066 | |
| 10 | Compressor and Fittings (Compresor) | 1 | 0010505701 | CL98300 |
| 11 | Bidirection Strainer | 1 | 07220016 | |
| 12 | Electric Expand Valve Fitting (Bobina-Cabezal) | 1 | 4304413208 | CL98398 |
| 13 | Pressure Protect Switch | 1 | 4602000902 | |
| 14 | Silencer | 1 | 7245012 | |
| 15 | Pressure Protect Switch | 1 | 46020003 | |
| 16 | Valve Support Sub-Assy | 1 | 0171501201P | |
| 17 | Right Side Plate Sub-Assy | 1 | 01315200069P | |
| 18 | Valve cover | 1 | 22245003 | |
| 19 | Valve | 1 | 07100005 | |
| 20 | Big Handle | 1 | 26235001 | |
| 21 | Cut-off Valve | 1 | 07133157 | |
| 22 | Filter | 1 | 07215201 | |
| 23 | Magnet Coil | 1 | 4300040033 | |
| 24 | 4-Way Valve (Válvula 4 Vías) | 1 | 4300008201 | CL98396 |
| 25 | Filter | 1 | 07225088 | |
| 26 | Temperature Sensor (Sonda Temp.) | 1 | 3900028020G | CL98382 |
| 27 | Electronic Expansion Valve (Cuerpo EXV) | 1 | 07334447 | CL98321 |
| 28 | Compressor Overload Proctector (External) | 1 | 00180030 | |
| 29 | Clapboard | 1 | 01245280 | |
| 30 | Rear Grill | 1 | 1475008 | |
| 31 | Terminal Board | 1 | 420111451 | |
| 32 | Terminal Board | 1 | 420101852 | |
| 33 | Condenser Assy | 1 | 01125200184 | |
| 34 | Electric Box Cover | 1 | 01425281 | |
| 35 | Top Cover Sub-Assy | 1 | 01255007 | |
| 36 | Electric Box Assy (Conjunto Eléctrico) | 1 | 01395200173 | CL98304 |
| 37 | IPM Board (Placa Inverter) | 1 | 30221000010 | CL98357 |
| 38 | Main Board (Placa Principal) | 1 | 30224000026 | CL98360 |
| 39 | Condenser support plate | 1 | 01175092 | |
| 40 | Left Handle | 1 | 26235401 | |
| 41 | Electric Box Cover | 1 | 01425279 | |
| 42 | PFC Inductance (Inductancia) | 1 | 43128003 | CL96385 |
| 43 | Inductance Box Sub-Assy | 1 | 01395200176 | CL98305 |
| 44 | Motor Support Assy | 1 | 01805200166 | |
| 45 | Left Side Plate | 1 | 01305043P | |
| | Sensor support | 1 | 26905202 | |
| | Filter Board (Placa Filtro) | 1 | 30221000007 | CL98397 |
| | Compressor Overload Protector (External) | 1 | 00183051 | |
| | Compressor Overload Protector | 1 | 00183032 | |

**UE20845 - MUCSR-30-H3**
**UE20855 - MUCSTR-30-H3**
**UE20865 - MUCR-30-H3**

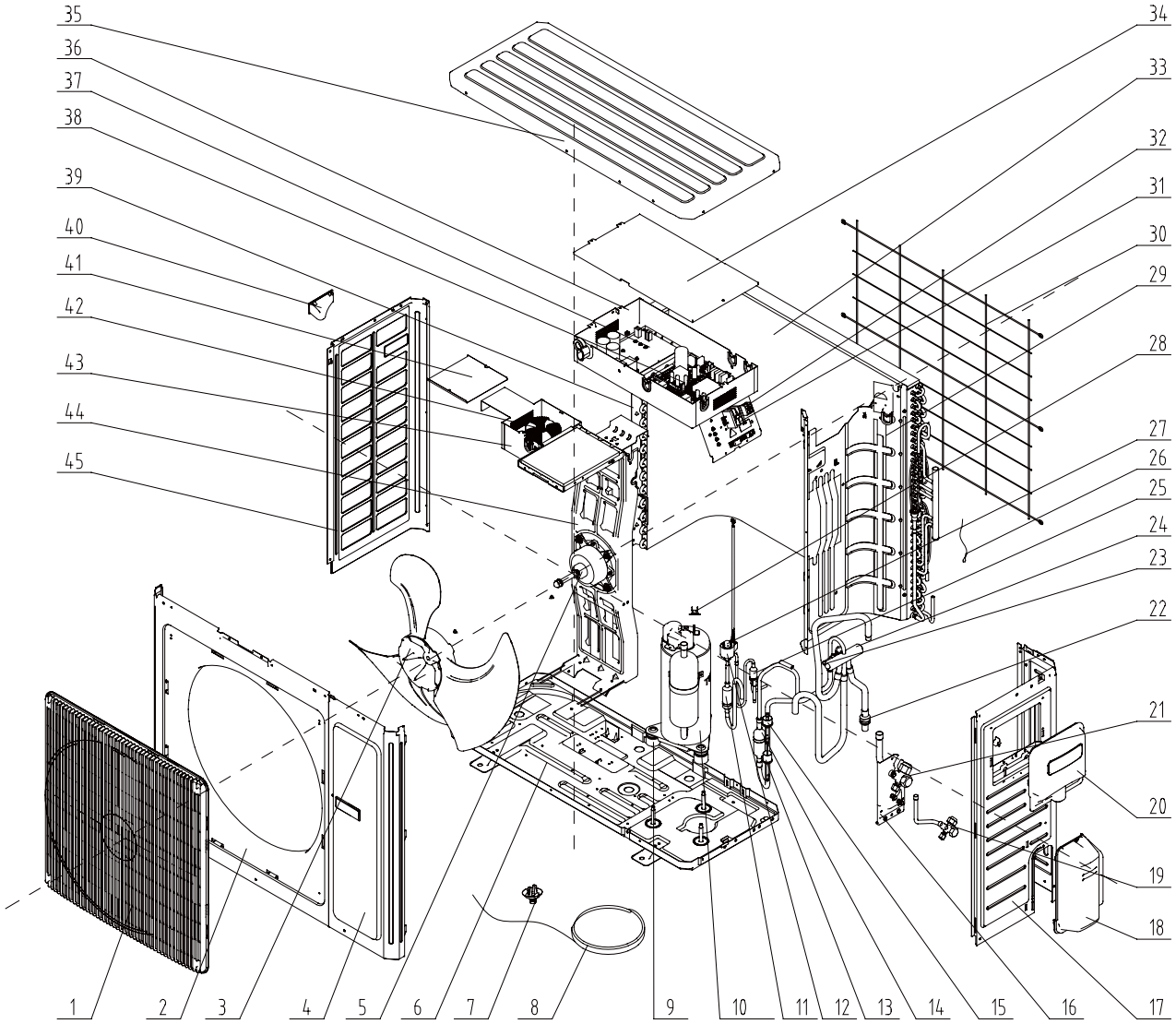

**UE20845 - MUCSR-30-H3**
**UE20855 - MUCSTR-30-H3**
**UE20865 - MUCR-30-H3**

| Nº | Descripción | Ud. | Ref. Proveedor | Código |
|---|---|---|---|---|
| 1 | Front Grill | 1 | 22415003 | |
| 2 | Cabinet | 1 | 01435004P | |
| 3 | Axial Flow Fan (Aspas Ventilador) | 1 | 10335014 | CL98328 |
| 4 | Front Side Plate | 1 | 01305086P | |
| 5 | Fan Motor (Motor Ventilador) | 1 | 15702802 | CL98342 |
| 6 | Chassis Sub-assy | 1 | 01195200013P | |
| 7 | Drainage Connecter | 1 | 06123401 | |
| 8 | electrical heater | 1 | 7651873209 | |
| 9 | Compressor Gasket | 1 | 76713066 | |
| 10 | Compressor and Fittings (Compresor) | 1 | 0010505701 | CL98300 |
| 11 | Bidirection Strainer | 1 | 7220016 | |
| 12 | Electric Expand Valve Fitting (Bobina-Cabezal) | 1 | 4304413208 | CL98398 |
| 13 | Pressure Protect Switch | 1 | 4602000902 | |
| 14 | Silencer | 1 | 07245012 | |
| 15 | Pressure Protect Switch | 1 | 46020003 | |
| 16 | Valve Support Sub-Assy | 1 | 0171501201P | |
| 17 | Right Side Plate Sub-Assy | 1 | 01315200069P | |
| 18 | Valve cover | 1 | 22245003 | |
| 19 | Valve | 1 | 07100005 | |
| 20 | Big Handle | 1 | 26235001 | |
| 21 | Cut-off Valve | 1 | 07133157 | |
| 22 | Filter | 1 | 07215201 | |
| 23 | Magnet Coil | 1 | 4300040033 | |
| 24 | 4-Way Valve (Válvula 4 Vías) | 1 | 4300008201 | CL98396 |
| 25 | Filter | 1 | 07225088 | |
| 26 | Temperature Sensor (Sonda Temp.) | 1 | 3900028020G | CL98382 |
| 27 | Electronic Expansion Valve (Cuerpo EXV) | 1 | 07334447 | CL98321 |
| 28 | Compressor Overload Proctector (External) | 1 | 00180030 | |
| 29 | Clapboard | 1 | 1245200006 | |
| 30 | Rear Grill | 1 | 01475008 | |
| 31 | Terminal Board | 1 | 420111451 | |
| 32 | Terminal Board | 1 | 420101852 | |
| 33 | Condenser Assy | 1 | 01125200182 | |
| 34 | Electric Box Cover | 1 | 01425281 | |
| 35 | Top Cover Sub-Assy | 1 | 01255007 | |
| 36 | Electric Box Assy (Conjunto Eléctrico) | 1 | 1395200178 | CL98307 |
| 37 | IPM Board (Placa Inverter) | 1 | 30221000010 | CL98357 |
| 38 | Main Board (Placa Principal) | 1 | 30224000038 | CL98367 |
| 39 | Condenser support plate | 1 | 01175092 | |
| 40 | Left Handle | 1 | 26235401 | |
| 41 | Electric Box Cover | 1 | 1425279 | |
| 42 | PFC Inductance | 1 | 43128003 | CL96385 |
| 43 | Inductance Box Sub-Assy | 1 | 01395200176 | CL98305 |
| 44 | Motor Support Assy | 1 | 01805200160 | |
| 45 | Left Side Plate | 1 | 01305043P | |
| | Compressor Overload Protector(External) | 1 | 00183051 | |
| | Compressor Overload Protector | 1 | 00183032 | |
| | Filter Board (Placa Filtro) | 1 | 30221000007 | CL98397 |
| | Sensor support | 1 | 26905202 | |

**UE20846 - MUCSR-36-H3**
**UE20856 - MUCSTR-36-H3**
**UE20866 - MUCR-36-H3**

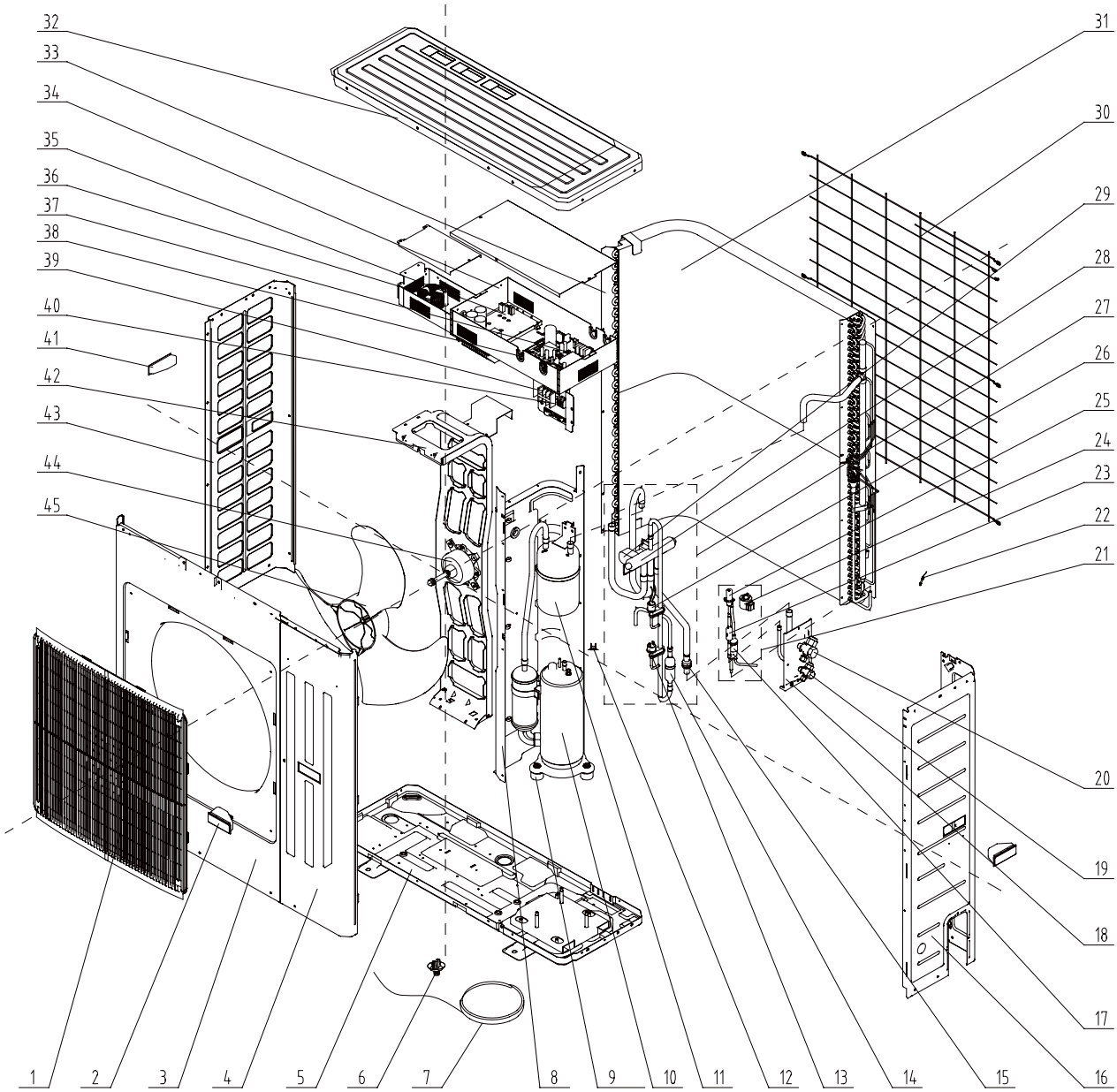

**UE20846 - MUCSR-36-H3**
**UE20856 - MUCSTR-36-H3**
**UE20866 - MUCR-36-H3**

| Nº | Descripción | Ud. | Ref. Proveedor | Código |
|---|---|---|---|---|
| 1 | Front Grill | 1 | 22415005 | |
| 2 | Handle | 2 | 26235253 | |
| 3 | Cabinet | 1 | 01435007P | |
| 4 | Front Side Plate Sub-Assy | 1 | 01305508 | |
| 5 | Chassis Sub-assy | 1 | 01195315P | |
| 6 | Drainage Joint | 1 | 26113009 | |
| 7 | Electrical heater | 1 | 7651873209 | |
| 8 | Clapboard Sub-Assy | 1 | 01245253 | |
| 9 | Compressor Gasket | 1 | 76713066 | |
| 10 | Compressor (Compresor) | 1 | 00205200003 | CL98303 |
| 11 | Gas-liquid Separator Sub-Assy | 1 | 07255201 | |
| 12 | Compressor Overload Proctector(External) | 1 | 00180030 | |
| 13 | Pressure Protect Switch | 1 | 46020003 | |
| 14 | Silencer | 1 | 07245012 | |
| 15 | Filter | 1 | 07215201 | |
| 16 | Right Side Plate Sub-Assy | 1 | 01315200068P | |
| 17 | Strainer | 1 | 07210045 | |
| 18 | Valve Support Sub-Assy | 1 | 01715257P | |
| 19 | Cut off Valve | 1 | 071302391 | |
| 20 | Cut-off Valve | 1 | 07133157 | |
| 21 | Electronic Expansion Valve Sub-Assy | 1 | 43045200007 | |
| 22 | Temperature Sensor (Sonda Temp.) | 1 | 39008000049G | CL98384 |
| 23 | Strainer | 1 | 07213032 | |
| 24 | Electric Expand Valve Fitting (Bobina-Cabezal) | 1 | 43000344 | CL98399 |
| 25 | Electronic Expansion Valve (Cuerpo EXV) | 1 | 07334194 | CL98320 |
| 26 | Pressure Protect Switch | 1 | 4602000902 | |
| 27 | 4-Way Valve Assy | 1 | 04045200038 | |
| 28 | 4-Way Valve (Válvula 4 Vías) | 1 | 43000338 | CL98400 |
| 29 | Magnet Coil | 1 | 4300040033 | |
| 30 | Rear Grill | 1 | 01475012 | |
| 31 | Condenser Assy | 1 | 01125200196 | |
| 32 | Top Cover | 1 | 0125500901P | |
| 33 | Condenser support plate | 1 | 01895242 | |
| 34 | Electric Box Assy (Conjunto Eléctrico) | 1 | 01395200180 | CL98308 |
| 35 | IPM Board (Placa Inverter) | 1 | 30221000003 | CL98355 |
| 36 | PFC Inductance | 1 | 43120011 | CL98386 |
| 37 | Main Board (Placa Principal) | 1 | 30224000037 | CL98366 |
| 38 | Filter Board | 1 | 30221000007 | CL98397 |
| 39 | Terminal Board | 1 | 42011242 | |
| 40 | Terminal Board | 1 | 420101852 | |
| 41 | Left Handle | 1 | 26235253 | |
| 42 | Motor Support Sub-Assy | 1 | 01805200190 | |
| 43 | Left Side Plate | 1 | 01305064P | |
| 44 | Fan Motor (Motor Ventilador) | 1 | 1570280201 | CL98343 |
| 45 | Axial Flow Fan (Aspas Ventilador) | 1 | 10335010 | CL98327 |
| | Compressor Overload Protector | 1 | 00183032 | |
| | Compressor Overload Protector (External) | 1 | 00183051 | |
| | Sensor support | 1 | 26905202 | |

**UE20847 - MUCSR-42-H3**
**UE20857 - MUCSTR-42-H3**
**UE20867 - MUCR-42-H3**

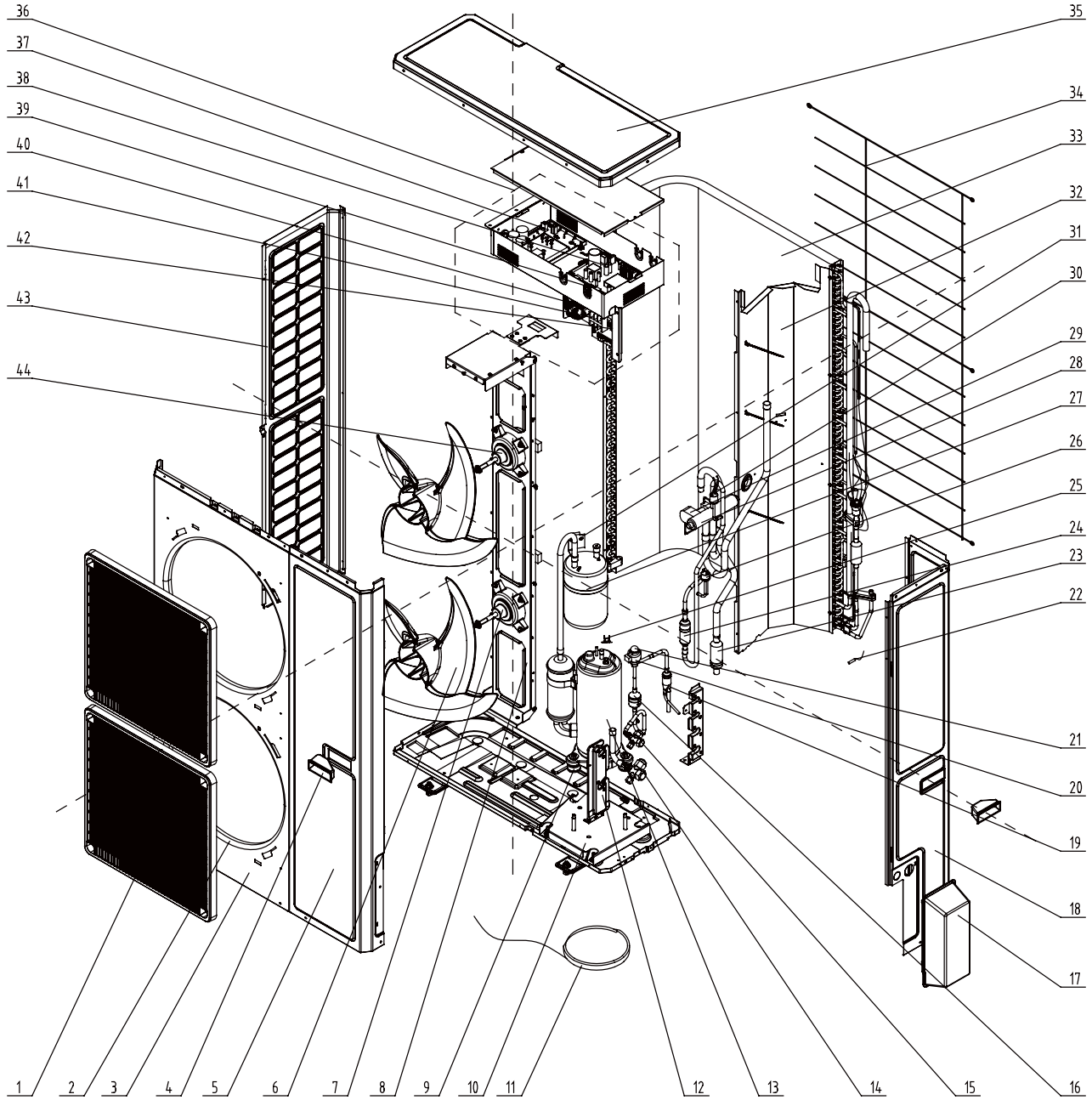

**UE20847 - MUCSR-42-H3**
**UE20857 - MUCSTR-42-H3**
**UE20867 - MUCR-42-H3**

| Nº | Descripción | Ud. | Ref. Proveedor | Código |
|---|---|---|---|---|
| 1 | Front Grill | 2 | 01575200001 | |
| 2 | Diversion Circle | 2 | 10474100001 | |
| 3 | Cabinet | 1 | 01514100002P | |
| 4 | Handle | 2 | 26235253 | |
| 5 | Front Side Plate | 1 | 01314100021P | |
| 6 | Axial Flow Fan (Aspas Ventilador) | 2 | 10434100003 | CL98335 |
| 7 | Fan Motor (Motor Ventilador) | 1 | 1570411501 | CL98347 |
| 8 | Motor Support Sub-Assy | 1 | 01805200202 | |
| 9 | Compressor Gasket | 3 | 76713066 | |
| 10 | Chassis Sub-assy | 1 | 01195200020P | |
| 11 | electrical heater | 1 | 76518732 | |
| 12 | Valve Support Sub-Assy | 1 | 01805200204P | |
| 13 | Compressor (Compresor) | 1 | 00205200003 | CL98303 |
| 14 | Cut off Valve | 1 | 07133844 | |
| 15 | Cut off Valve | 1 | 07130209 | |
| 16 | Filter | 1 | 07415210 | |
| 17 | Valve Cover | 1 | 26904100056 | |
| 18 | Rear Side Plate | 1 | 01314100020P | |
| 19 | Strainer | 1 | 07210045 | |
| 20 | Electronic Expansion Valve (Cuerpo EXV) | 1 | 07334194 | CL98320 |
| 21 | Electric Expand Valve Fitting (Bobina-Cabezal) | 1 | 4300010839 | CL98401 |
| 22 | Temperature Sensor (Sonda Temp.) | 1 | 3900028025G | CL98383 |
| 23 | Strainer | 1 | 07411100014 | |
| 24 | Silencer | 1 | 07245012 | |
| 25 | Compressor Overload Proctector(External) | 1 | 00180030 | |
| 26 | Pressure Protect Switch | 1 | 4602000902 | |
| 27 | Gas-liquid Separator Sub-Assy | 1 | 07255201 | |
| 28 | 4-Way Valve (Válvula 4 Vías) | 1 | 43000338 | CL98400 |
| 29 | Magnet Coil | 1 | 4300040032 | |
| 30 | Pressure Protect Switch | 1 | 46020003 | |
| 31 | Fix Clamp | 1 | 02145008 | |
| 32 | Clapboard | 1 | 01245200007 | |
| 33 | Condenser Assy | 1 | 01125200197 | |
| 34 | Rear Grill | 1 | 01574100004 | |
| 35 | Coping | 1 | 01264100008P | |
| 36 | Electric Box Assy (Conjunto Eléctrico) | 1 | 01395200181 | CL98309 |
| 37 | Main Board (Placa Principal) | 1 | 30224000036 | CL98365 |
| 38 | IPM Board (Placa Inverter) | 1 | 30221000003 | CL98355 |
| 39 | Filter Board (Placa Filtro) | 1 | 30221000007 | CL98397 |
| 40 | PFC Inductance | 1 | 43120011 | CL98386 |
| 41 | Terminal Board | 1 | 42011242 | |
| 42 | Terminal Board | 1 | 420101852 | |
| 43 | Left Side Plate | 1 | 01314100013P | |

**UE20848 - MUCSR-48-H3**
**UE20858 - MUCSTR-48-H3**
**UE20868 - MUCR-48-H3**

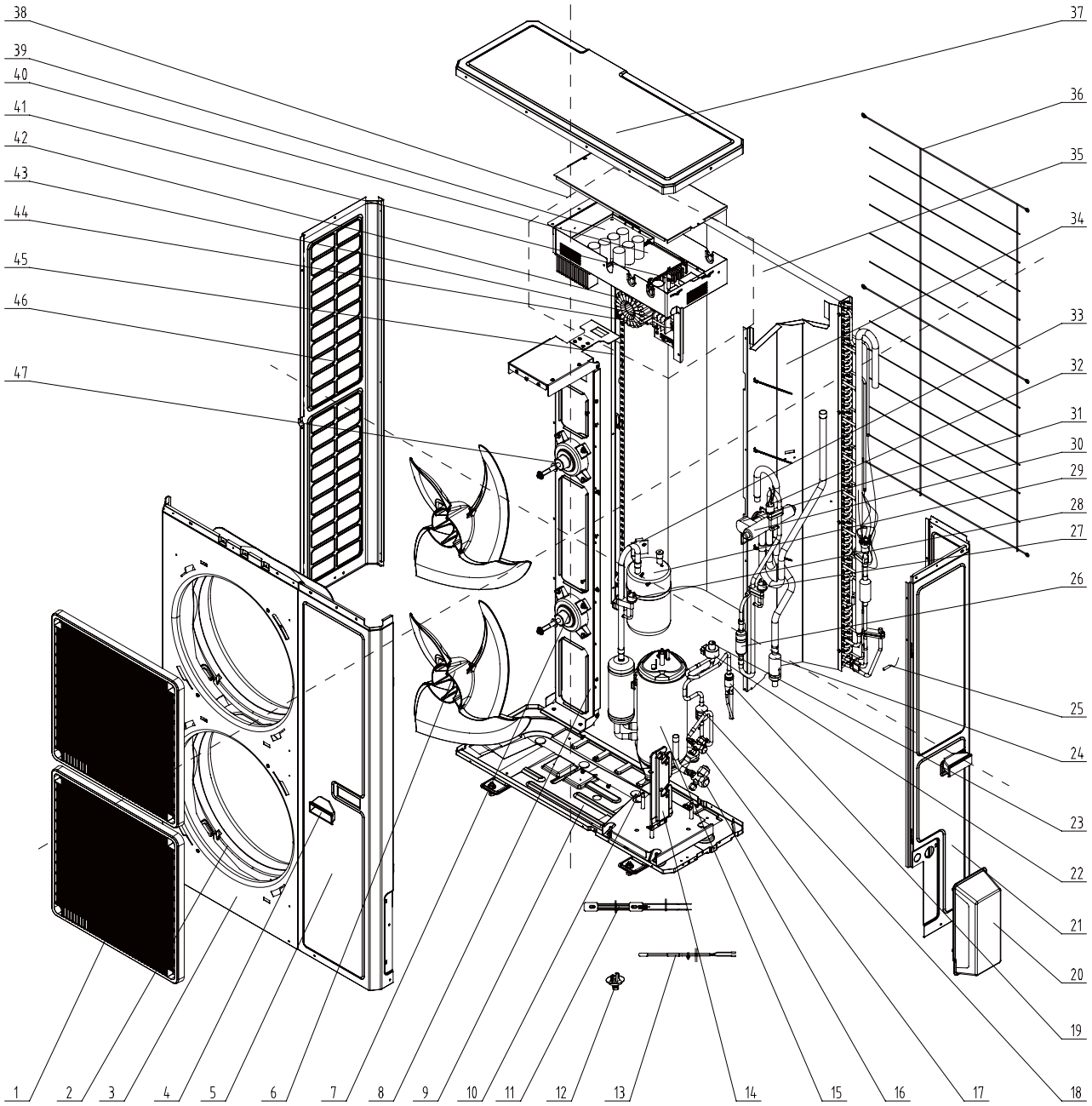

**UE20848 - MUCSR-48-H3**
**UE20858 - MUCSTR-48-H3**
**UE20868 - MUCR-48-H3**

| Nº | Descripción | Ud. | Ref. Proveedor | Código |
|---|---|---|---|---|
| 1 | Front Grill | 2 | 01575200001 | |
| 2 | Diversion Circle | 2 | 10474100001 | |
| 3 | Cabinet | 1 | 01514100002P | |
| 4 | Handle | 2 | 26235253 | |
| 5 | Front Side Plate | 1 | 01314100021P | |
| 6 | Axial Flow Fan (Aspas Ventilador) | 2 | 10434100003 | CL98335 |
| 7 | Fan Motor (Motor Ventilador) | 1 | 1570411501 | CL98347 |
| 8 | Motor Support Sub-Assy | 1 | 01805200202 | |
| 9 | Chassis Sub-assy | 1 | 01195200020P | |
| 10 | Compressor Gasket | 3 | 76710247 | |
| 11 | electrical heater | 1 | 765152123 | |
| 12 | Drainage Joint | 1 | 26113009 | |
| 13 | Electrical Heater | 0 | none | |
| 14 | Valve Support Sub-Assy | 1 | 01805200204P | |
| 15 | Compressor (Compresor) | 1 | 00204100001 | CL98302 |
| 16 | Cut off Valve | 1 | 07133844 | |
| 17 | Cut off Valve | 1 | 07130209 | |
| 18 | Filter | 1 | 07415210 | |
| 19 | Strainer | 1 | 07210045 | |
| 20 | Valve Cover | 1 | 26904100056 | |
| 21 | Rear Side Plate | 1 | 01314100020P | |
| 22 | Electronic Expansion Valve (Cuerpo EXV) | 1 | 07335283 | CL98322 |
| 23 | Electric Expand Valve Fitting (Bobina-Cabezal) | 1 | 4304001902 | CL98402 |
| 24 | Strainer | 1 | 07411100014 | |
| 25 | Temperature Sensor (Sonda Temp.) | 1 | 3900028025G | CL98383 |
| 26 | Silencer | 1 | 07245012 | |
| 27 | Pressure Protect Switch | 1 | 46020007 | |
| 28 | Pressure Protect Switch | 1 | 4602000902 | |
| 29 | Gas-liquid Separator Sub-Assy | 1 | 0722501801 | |
| 30 | 4-Way Valve (Válvula 4 Vías) | 1 | 43000338 | CL98400 |
| 31 | Magnet Coil | 1 | 4300040032 | |
| 32 | Pressure Protect Switch | 1 | 46020003 | |
| 33 | Fix Clamp | 1 | 02145008 | |
| 34 | Clapboard | 1 | 0124520000701 | |
| 35 | Condenser Assy | 1 | 01125200213 | |
| 36 | Rear Grill | 1 | 01574100004 | |
| 37 | Coping | 1 | 01264100008P | |
| 38 | Electric Box Assy (Conjunto Eléctrico) | 1 | 01395200255 | CL98312 |
| 39 | IPM Board (Placa Inverter) | 1 | 30228000005 | CL98369 |
| 40 | Filter Board (Placa Filtro) | 1 | 30228000006 | CL98403 |
| 41 | Main Board (Placa Principal) | 1 | 30224000035 | CL98364 |
| 42 | Inductance (Inductancia) | 1 | 43120122 | CL98388 |
| 43 | Terminal Board | 1 | 42011242 | |
| 44 | Terminal Board | 1 | 420101852 | |
| 45 | Supporting Strip | 0 | none | |
| 46 | Left Side Plate | 1 | 01314100013P | |
| 47 | Fan Motor (Motor Ventilador) | 1 | 15704115 | CL98346 |

**UE20849 - MUCSR-60-H3**
**UE20859 - MUCSTR-60-H3**
**UE20869 - MUCR-60-H3**

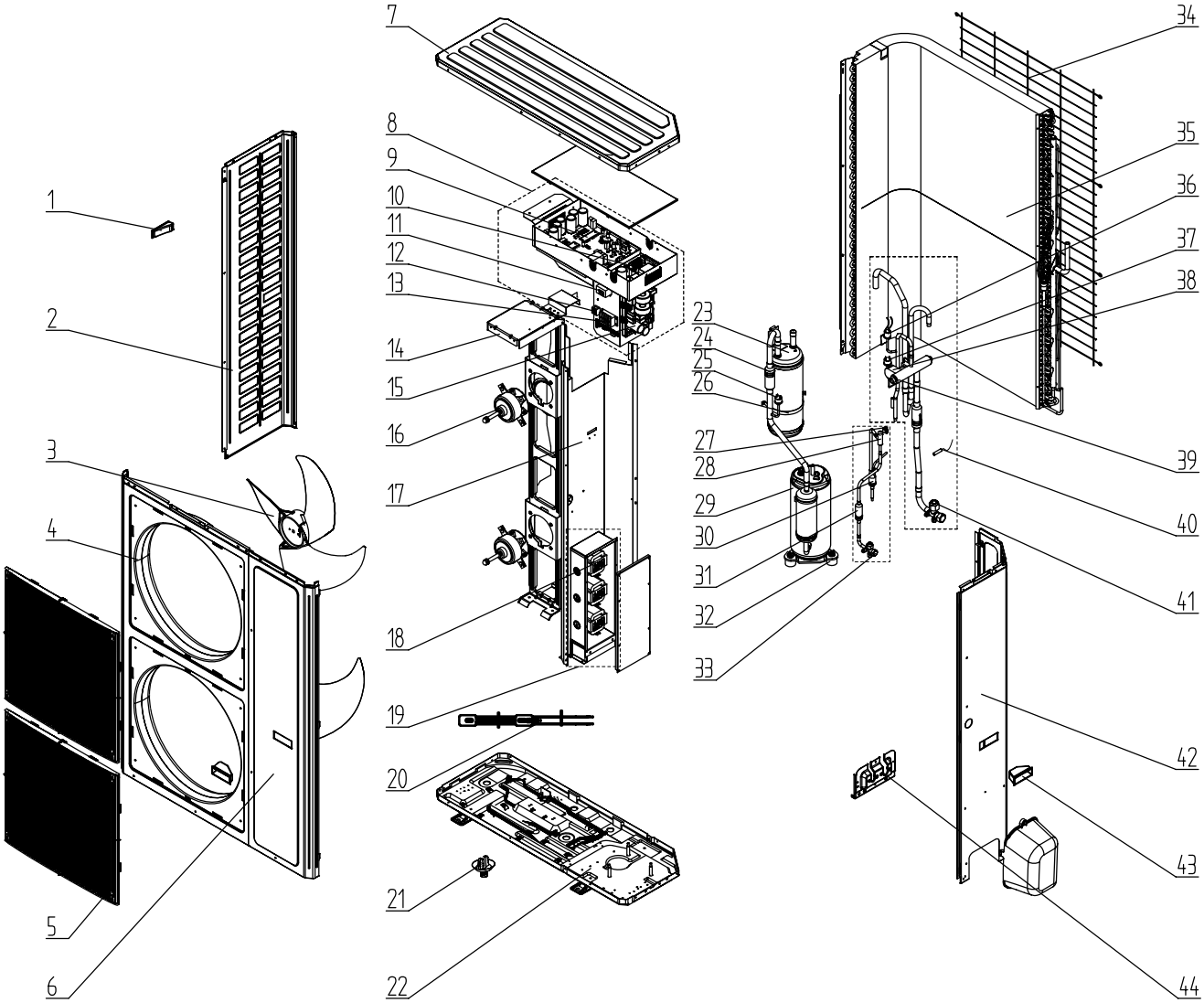

**UE20849 - MUCSR-60-H3**
**UE20859 - MUCSTR-60-H3**
**UE20869 - MUCR-60-H3**

| Nº | Descripción | Ud. | Ref. Proveedor | Código |
|---|---|---|---|---|
| 1 | Left Handle | 1 | 26235401 | |
| 2 | Left Side Plate | 1 | 01315366P | |
| 3 | Axial Flow Fan (Aspas Ventilador) | 2 | 10335008 | CL98326 |
| 4 | Cabinet | 1 | 01515204P | |
| 5 | Front Grill | 2 | 22415002 | |
| 6 | Front Side Plate | 1 | 01315364P | |
| 7 | Top Cover | 1 | 01265356P | |
| 8 | Electric Box Assy (Conjunto Eléctrico) | 1 | 01395200287 | |
| 9 | IPM Board (Placa Inverter) | 1 | 30223000013 | CL98404 |
| 10 | Main Board (Placa Principal) | 1 | 30224000034 | CL98405 |
| 11 | Inductance (Inductancia) | 1 | 43128000014 | |
| 12 | Terminal Board | 1 | 420101852 | |
| 13 | Terminal Board | 1 | 42011221 | |
| 14 | Motor Support Sub-Assy | 1 | 01805200247 | |
| 15 | Filter Board (Placa Filtro) | 1 | 30223000015 | CL98406 |
| 16 | Fan Motor (Motor Ventilador) | 2 | 1570280203 | CL98407 |
| 17 | Clapboard Sub-Assy | 1 | 01245200012 | |
| 18 | Reactor | 3 | 43130192 | |
| 19 | Electric Box Assy 2 | 1 | 01395200346 | |
| 20 | electrical heater | 1 | 76518732 | |
| 21 | Drainage Connecter | 1 | 06123401 | |
| 22 | Chassis Sub-assy | 1 | 01195200030P | |
| 23 | Gas-liquid Separator Assy | 1 | 07225016 | |
| 24 | Filter | 2 | 07210037 | |
| 25 | Pressure Protect Switch | 1 | 46020007 | |
| 26 | Liquid Accumulator Clamp | 1 | 02145435 | |
| 27 | Electric Expand Valve Fitting (Bobina-Cabezal) | 1 | 4304413207 | CL98408 |
| 28 | Electronic Expansion Valve (Cuerpo EXV) | 1 | 07334412 | CL98409 |
| 29 | Compressor and Fittings (Compresor) | 1 | 00103923_G | CL98410 |
| 30 | Bidirection Strainer | 1 | 07220016 | |
| 31 | Bidirection Strainer | 1 | 07220016 | |
| 32 | Compressor Gasket | 3 | 76710247 | |
| 33 | Cut off Valve | 1 | 07130209 | |
| 34 | Rear Grill | 1 | 01575205 | |
| 35 | Condenser Assy | 1 | 01125747 | |
| 36 | Pressure Protect Switch | 1 | 4602000902 | |
| 37 | Pressure Protect Switch | 1 | 46020003 | |
| 38 | Magnet Coil | 1 | 4300040032 | |
| 39 | 4-Way Valve (Válvula 4 Vías) | 1 | 43000338 | CL98400 |
| 40 | Temperature Sensor (Sonda Temp.) | 1 | 3900028015G | CL98411 |
| 41 | Cut-off Valve | 1 | 07130212 | |
| 42 | Rear Side Plate Sub-Assy | 1 | 01315200104P | |
| 43 | Left Handle | 2 | 26235401 | |
| 44 | Valve Support Sub-Assy | 1 | 0171500101 | |

**MUCSR-12-H3**
**UI20842**

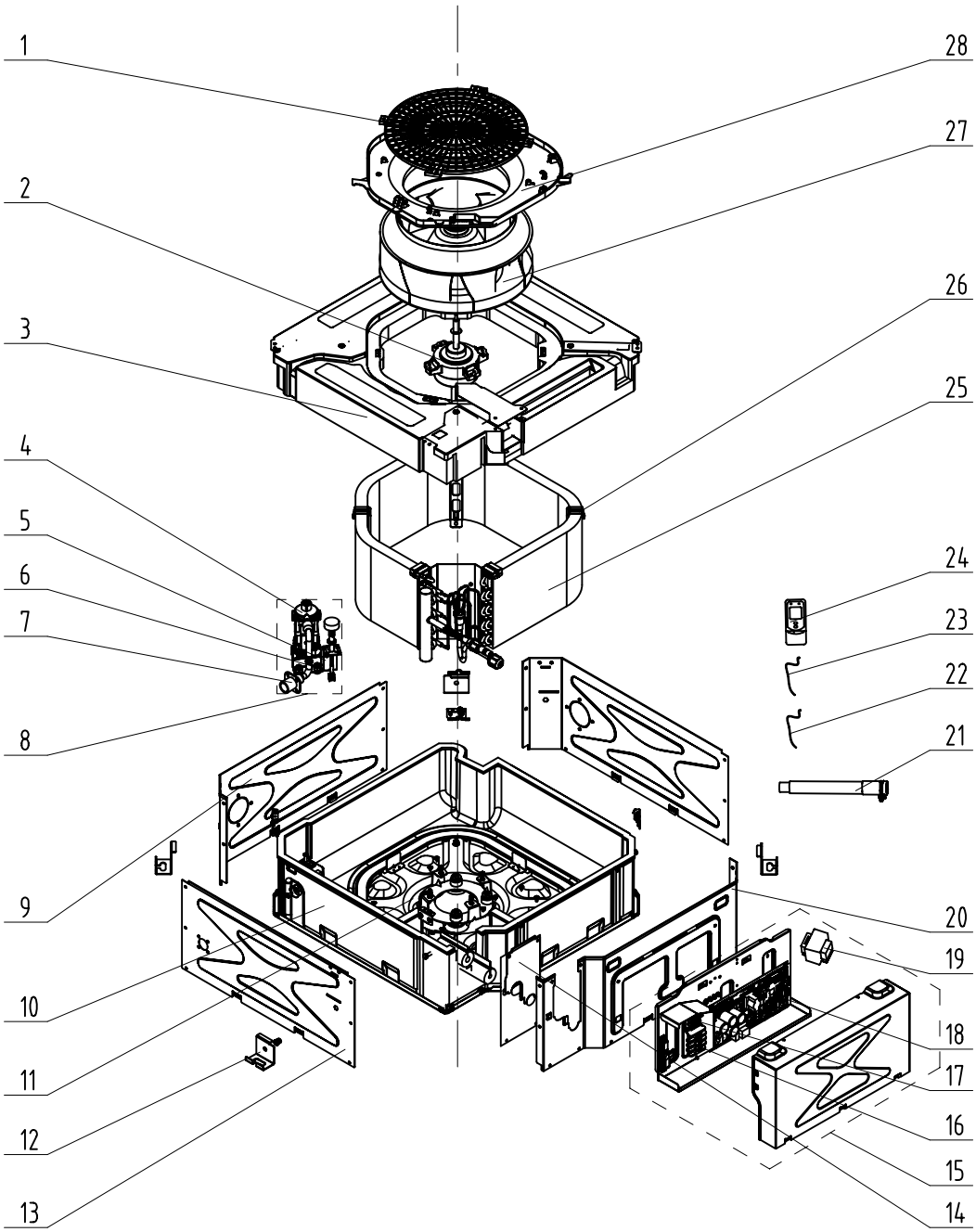

## MUCSR-12-H3
UI20842

| Nº | Descripción | Ud. | Ref. Proveedor | Código |
|---|---|---|---|---|
| 1 | Rear Grill | 1 | 26909400007 | |
| 2 | Brushless DC Motor | 1 | 15709400004 | CL98352 |
| 3 | Water Tray Assy | 1 | 01289400004 | |
| 4 | Water Pump | 1 | 43138000024 | CL98413 |
| 5 | Supporter | 1 | 01809400005 | |
| 6 | Water Level Switch | 0 | none | |
| 7 | Pump Drainpipe | 1 | 04269400001 | |
| 8 | Water Pump Assy (completa) | 1 | 15409400003 | CL98341 |
| 9 | Right Side Plate Sub-Assy | 2 | 01319400013 | |
| 10 | Bottom Foam Assy | 1 | 12509400004 | |
| 11 | Base Plate Assy | 1 | 02229400007 | |
| 12 | Major Mounting Rack | 4 | 01332705 | |
| 13 | Left Side Plate Sub-Assy | 1 | 01319400012 | |
| 14 | Pressure Plate of Outlet Pipe | 1 | 01349400004 | |
| 15 | Electric Box Assy | 1 | 01399400076 | CL98318 |
| 16 | Terminal Board | 1 | 42010274 | |
| 17 | Terminal Board | 1 | 4201025301 | |
| 18 | Main Board | 1 | 30224000028 | CL98361 |
| 19 | Transformer | 1 | 43118000015 | CL98385 |
| 20 | Front Side Plate Sub-Assy | 1 | 01319400014 | |
| 21 | Drain Hose Sub-Assy | 1 | 05232050 | |
| 22 | Room Sensor | 1 | 39000191 | CL98376 |
| 23 | Tube sensor | 1 | 3900012128 | CL98375 |
| 24 | Remote Controller | 1 | 305100413W | CL98372 |
| 25 | Evaporator Assy | 1 | 01029400013 | |
| 26 | Supporter | 3 | 01809400007 | |
| 27 | Centrifugal Fan | 1 | 10429400001 | CL98333 |
| 28 | Diversion Circle | 1 | 10479400001 | |

**MUCSR-18-H3**
**UI20843**

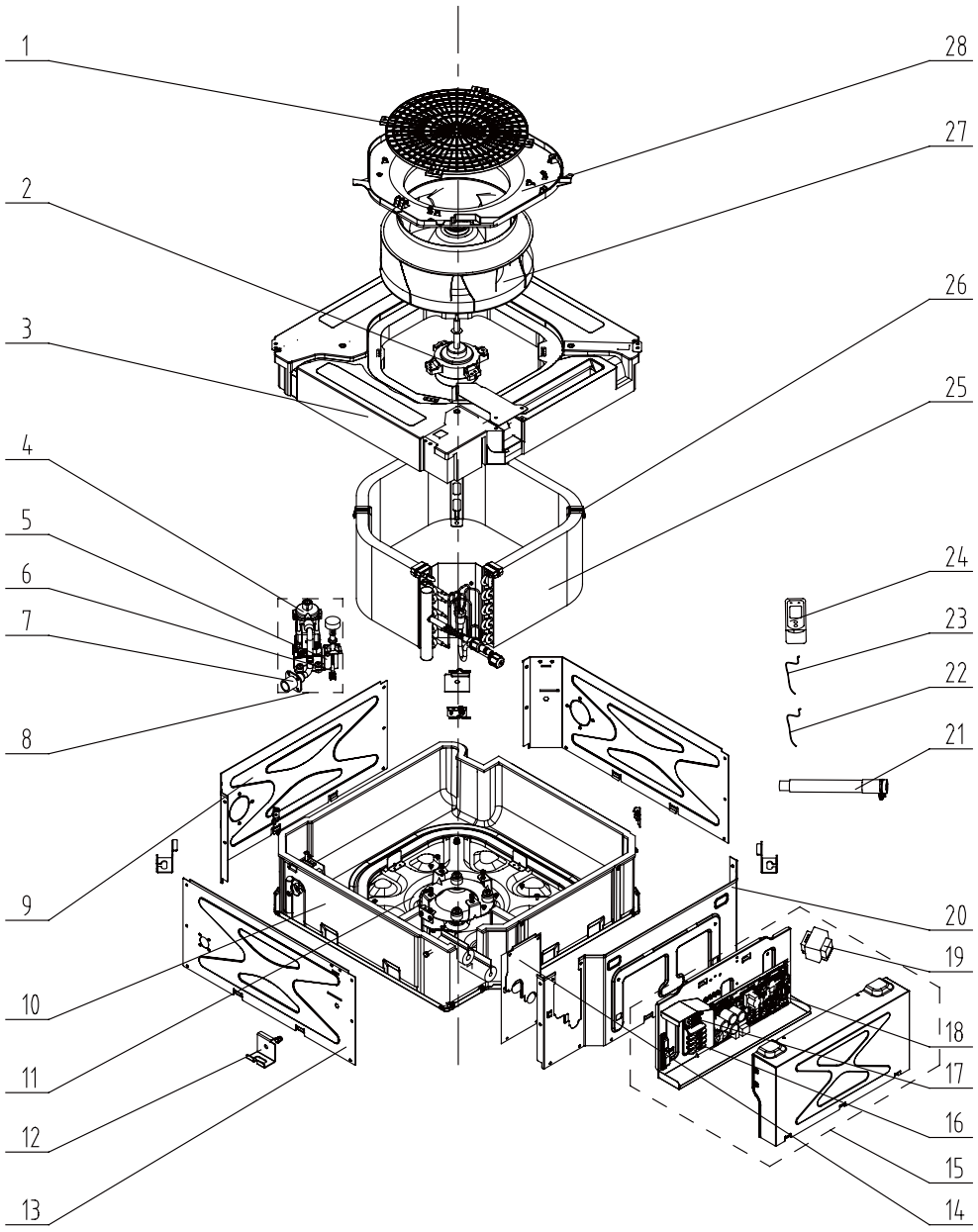

## MUCSR-18-H3
UI20843

| Nº | Descripción | Ud. | Ref. Proveedor | Código |
|---|---|---|---|---|
| 1 | Rear Grill | 1 | 26909400007 | |
| 2 | Brushless DC Motor (Motor ventilador) | 1 | 15709400004 | CL98352 |
| 3 | Water Tray Assy | 1 | 01289400004 | |
| 4 | Water Pump | 1 | 43138000024 | |
| 5 | Supporter | 1 | 01809400005 | |
| 6 | Receiver Window | 0 | NONE | |
| 7 | Pump Drainpipe | 1 | 04269400001 | |
| 8 | Water Pump Assy (Conjunto bomba de condensados) | 1 | 15409400003 | CL98341 |
| 9 | Right Side Plate Sub-Assy | 2 | 01319400013 | |
| 10 | Bottom Foam Assy | 1 | 12509400004 | |
| 11 | Base Plate Assy | 1 | 02229400007 | |
| 12 | Major Mounting Rack | 4 | 01332705 | |
| 13 | Left Side Plate Sub-Assy | 1 | 01319400012 | |
| 14 | Pressure Plate of Outlet Pipe | 1 | 01349400004 | |
| 15 | Electric Box Assy (Conjunto eléctrico) | 1 | 01399400076 | CL98318 |
| 16 | Terminal Board | 1 | 42010274 | |
| 17 | Terminal Board | 1 | 4201025301 | |
| 18 | Main Board (Placa electrónica) | 1 | 30224000028 | CL98361 |
| 19 | Transformer (Transformador) | 1 | 43118000015 | CL98385 |
| 20 | Front Side Plate Sub-Assy | 1 | 01319400014 | |
| 21 | Drain Hose Sub-Assy | 1 | 05232050 | |
| 22 | Room Sensor (Sensor temperatura ambiente) | 1 | 39000191 | CL98376 |
| 23 | Tube sensor (Sensor temperatura tubería) | 1 | 3900012128 | CL98375 |
| 24 | Remote Controller (Control remoto) | 1 | 305100413W | CL98372 |
| 25 | Evaporator Assy | 1 | 01029400013 | |
| 26 | Supporter | 3 | 01809400007 | |
| 27 | Centrifugal Fan (Ventilador centrifugo) | 1 | 10429400001 | CL98333 |
| 28 | Diversion Circle | 1 | 10479400001 | |

**MUCSR-24-H3**
**UI20844**

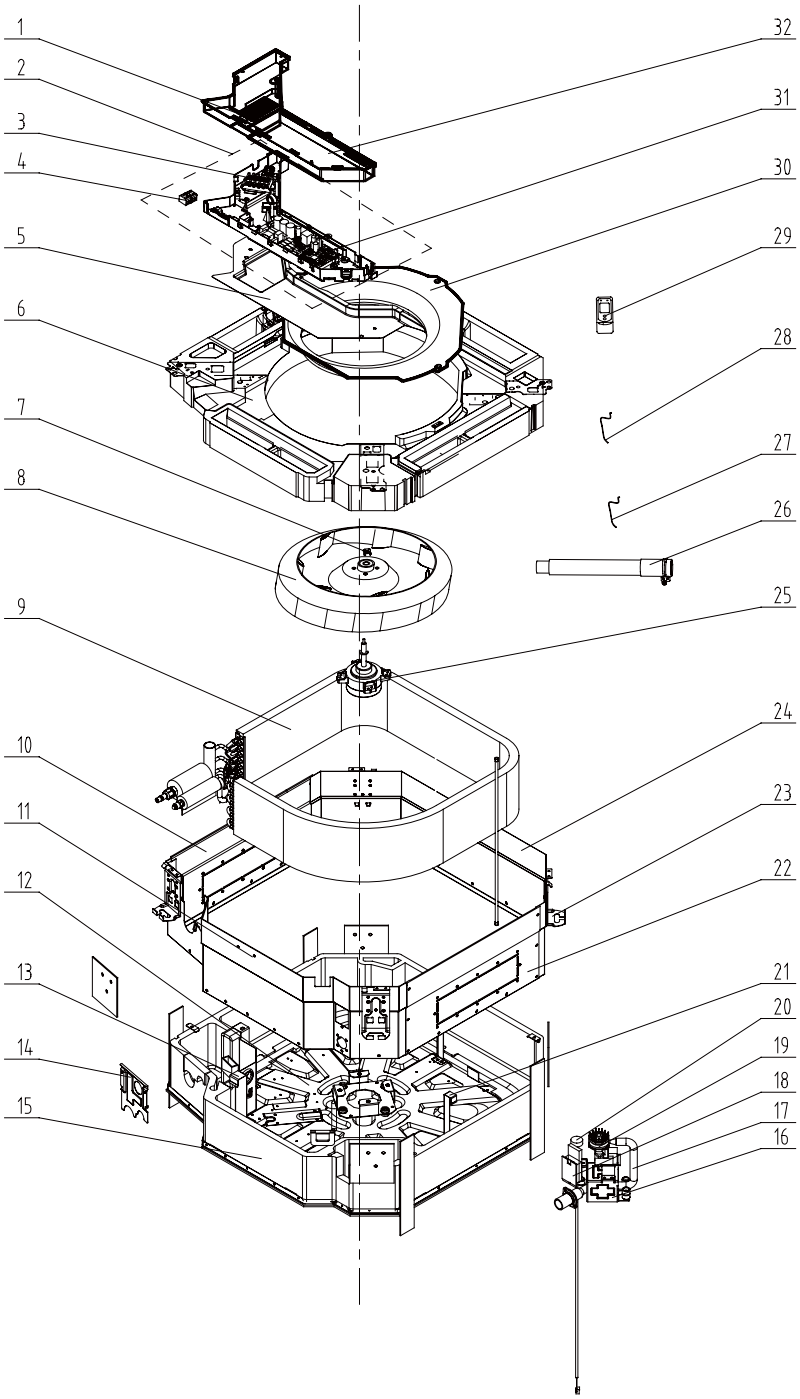

## MUCSR-24-H3
UI20844

| Nº | Descripción | Ud. | Ref. Proveedor | Código |
|---|---|---|---|---|
| 1 | Electric Box Cover Sub-Assy1 | 1 | 20122054 | |
| 2 | Electric Box Assy (Conjunto eléctrico) | 1 | 01399400057 | CL98314 |
| 3 | Terminal Board | 1 | 4201025801 | |
| 4 | Terminal Board | 1 | 4201025301 | |
| 5 | Electric Box Base Plate | 1 | 01412721 | |
| 6 | Water Tray Assy | 1 | 20182701 | |
| 7 | Fan Fixer | 1 | 10312701 | |
| 8 | Centrifugal Fan (Ventilador centrifugo) | 1 | 10312705 | CL98324 |
| 9 | Evaporator Assy | 1 | 01029400045 | |
| 10 | Left Side Plate Assy | 1 | 01302715 | |
| 11 | Front Side Plate | 1 | 01302718 | |
| 12 | Base Plate Assy | 1 | 01222701 | |
| 13 | Connection Sheet Assy | 1 | 01074042 | |
| 14 | Tube Exit Plate Assy | 1 | 01382715 | |
| 15 | Bottom Foam Assy | 1 | 52012722 | |
| 16 | Water Pump Mounting Rack | 1 | 01329416 | |
| 17 | Drain Pipe for Water Pump | 1 | 05230026 | |
| 18 | Pump Backup Cover Plate Assy | 1 | 01252713 | |
| 19 | Water Pump (Bomba de condensados) | 1 | 43130324 | CL98412 |
| 20 | Water Level Switch (Interruptor de nivel) | 1 | 45018012 | CL98391 |
| 21 | Evaporator of Fixed Mount | 2 | 01072703 | |
| 22 | Right Side Plate | 1 | 01302716 | |
| 23 | Major Mounting Plate | 4 | 01332701 | |
| 24 | Rear Side Plate | 1 | 01302714 | |
| 25 | Brushless DC Motor (Motor ventilador) | 1 | 15709400004 | CL98352 |
| 26 | Drain Hose Assy | 1 | 05232702 | |
| 27 | Room Sensor (Sensor temperatura ambiente) | 1 | 390001912 | CL98377 |
| 28 | Tube sensor (Sensor temperatura tubería) | 1 | 390001921G | CL98379 |
| 29 | Remote Controller (Control remoto) | 1 | 305100413W | CL98372 |
| 30 | Diversion Circle | 1 | 10372701 | |
| 31 | Main Board (Placa electrónica) | 1 | 30224000028 | CL98361 |
| 32 | Electric Box Cover Sub-Assy2 | 1 | 20122055 | |
| | Motor Gasket | 4 | 76712711 | |
| | Pump Gasket | 3 | 76712702 | |

**MUCSR-30-H3**
**UI20845**

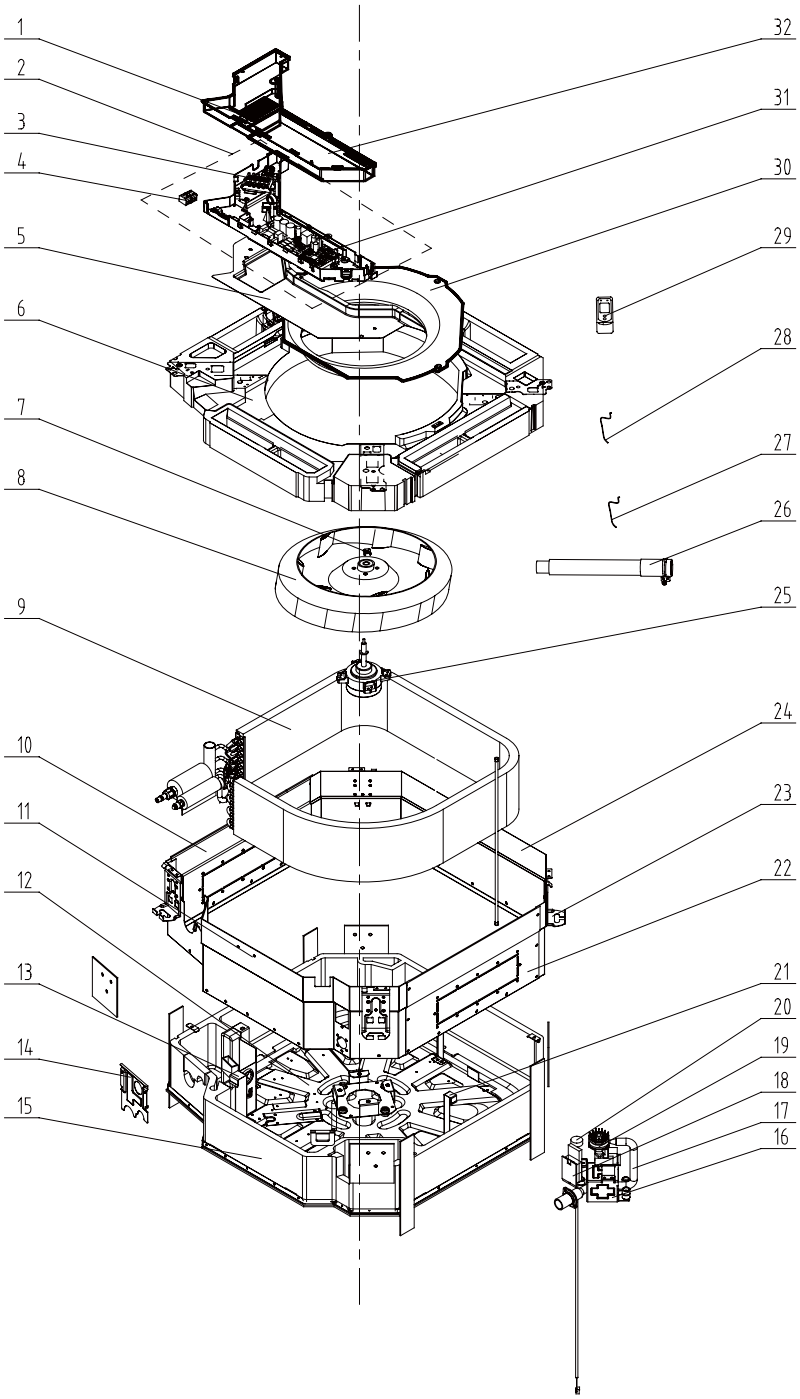

## MUCSR-30-H3
UI20845

| Nº | Descripción | Ud. | Ref. Proveedor | Código |
|---|---|---|---|---|
| 1 | Electric Box Cover Sub-Assy1 | 1 | 20122054 | |
| 2 | Electric Box Assy (Conjunto eléctrico) | 1 | 01399400057 | CL98314 |
| 3 | Terminal Board | 1 | 4201025801 | |
| 4 | Terminal Board | 1 | 4201025301 | |
| 5 | Electric Box Base Plate | 1 | 01412721 | |
| 6 | Water Tray Assy | 1 | 20182701 | |
| 7 | Fan Fixer | 1 | 10312701 | |
| 8 | Centrifugal Fan (Ventilador centrifugo) | 1 | 10310101 | CL98323 |
| 9 | Evaporator Assy | 1 | 01029400042 | |
| 10 | Left Side Plate Assy | 1 | 01302711 | |
| 11 | Front Side Plate | 1 | 01302713 | |
| 12 | Base Plate Assy | 1 | 01222701 | |
| 13 | Evaporator Linkage | 1 | 01072732 | |
| 14 | Tube Exit Plate Assy | 1 | 01382715 | |
| 15 | Bottom Foam Assy | 1 | 52012721 | |
| 16 | Water Pump Mounting Rack | 1 | 01332721 | |
| 17 | Drain Pipe for Water Pump | 1 | 05230026 | |
| 18 | Pump Backup Cover Plate Assy | 1 | 01252713 | |
| 19 | Water Pump (Bomba de condensados) | 1 | 43130324 | CL98412 |
| 20 | Water Level Switch (Interruptor de nivel) | 1 | 45018012 | CL98391 |
| 21 | Evaporator of Fixed Mount | 2 | 01072707 | |
| 22 | Right Side Plate Assy | 1 | 01302712 | |
| 23 | Major Mounting Plate | 4 | 01332701 | |
| 24 | Rear Side Plate | 1 | 01302709 | |
| 25 | Brushless DC Motor (Motor ventilador) | 1 | 15709400003 | CL98351 |
| 26 | Drain Hose Assy | 1 | 05232702 | |
| 27 | Room Sensor (Sensor temperatura ambiente) | 1 | 390001912 | CL98377 |
| 28 | Tube sensor (Sensor temperatura tubería) | 1 | 390001921G | CL98379 |
| 29 | Remote Controller (Control remoto) | 1 | 305100413W | CL98372 |
| 30 | Diversion Circle | 1 | 10372722 | |
| 31 | Main Board (Placa electrónica) | 1 | 30224000028 | CL98361 |
| 32 | Electric Box Cover Sub-Assy2 | 1 | 20122116 | |
| | Pump Gasket | 3 | 76712702 | |
| | Motor Gasket | 4 | 76712711 | |

**MUCSR-36-H3**
**UI20846**

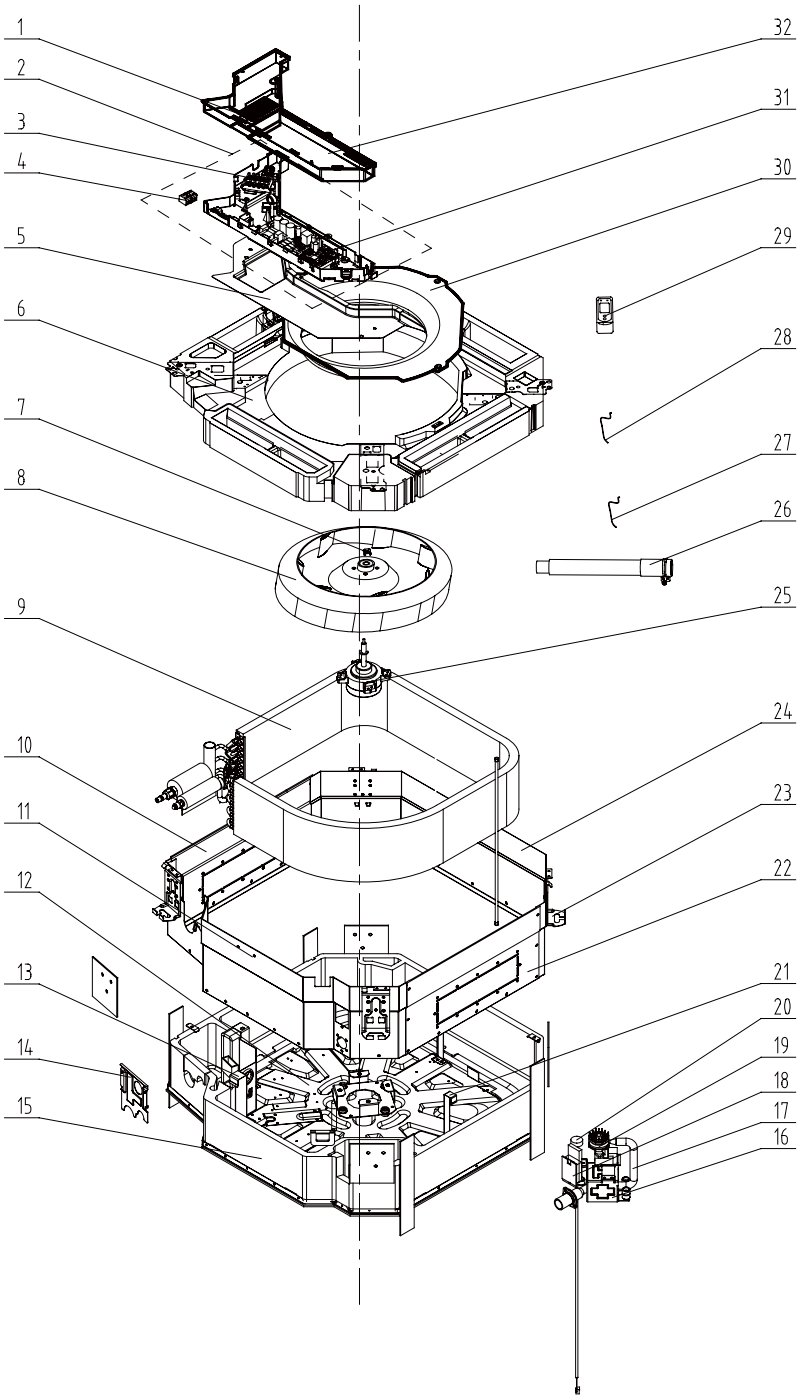

## MUCSR-36-H3
UI20846

| Nº | Descripción | Ud | Ref. Proveedor | Código |
|---|---|---|---|---|
| 1 | Electric Box Cover Sub-Assy1 | 1 | 20122054 | |
| 2 | Electric Box Assy | 1 | 01399400057 | |
| 3 | Terminal Board | 1 | 4201025801 | |
| 4 | Terminal Board | 1 | 4201025301 | |
| 5 | Electric Base Plate | 1 | 01412721 | |
| 6 | Water Tray Assy | 1 | 20182701 | |
| 7 | Fan Fixer | 1 | 10312701 | |
| 8 | Centrifugal Fan (Ventilador centrifugo) | 1 | 10310101 | CL98323 |
| 9 | Evaporator Assy | 1 | 01029400042 | |
| 10 | Left Side Plate Assy | 1 | 01302711 | |
| 11 | Front Side Plate assy | 1 | 01302713 | |
| 12 | Base Plate Assy | 1 | 01222701 | |
| 13 | Connection Sheet Assy | 1 | 01349400007 | |
| 14 | Tube Exit Plate Assy | 1 | 01382715 | |
| 15 | Bottom Foam Assy | 1 | 52012721 | |
| 16 | Pump Support | 1 | 01332721 | |
| 17 | Pump Drainpipe | 1 | 05230026 | |
| 18 | Pump Cover Board Assy | 1 | 01252713 | |
| 19 | Water Pump (Bomba de condensados) | 1 | 43130324 | CL98412 |
| 20 | Water Level Switch | 1 | 45020216 | |
| 21 | Evaporator Support Assy | 2 | 01072707 | |
| 22 | Right Side Plate Assy | 1 | 01302712 | |
| 23 | Body Installing Plate | 4 | 01332701 | |
| 24 | Rear Side Plate Assy | 1 | 01302709 | |
| 25 | Brushless DC Motor | 1 | 15709400003 | |
| 26 | Drain Hose Sub-Assy | 1 | 05232702 | |
| 27 | Room Sensor (Sensor temperatura ambiente) | 1 | 390001912 | CL98377 |
| 28 | Temperature Sensor (Sensor temperatura de tubería) | 1 | 390001921G | CL98379 |
| 29 | Remote Controller | 1 | 30510516 | |
| 30 | Diversion Circle | 1 | 10372722 | |
| 31 | Main Board (Placa electrónica) | 1 | 30224000028 | CL98361 |
| 32 | Electric Box Cover Sub-Assy2 | 1 | 20122055 | |

**MUCSR-42-H3**
**UI20847**

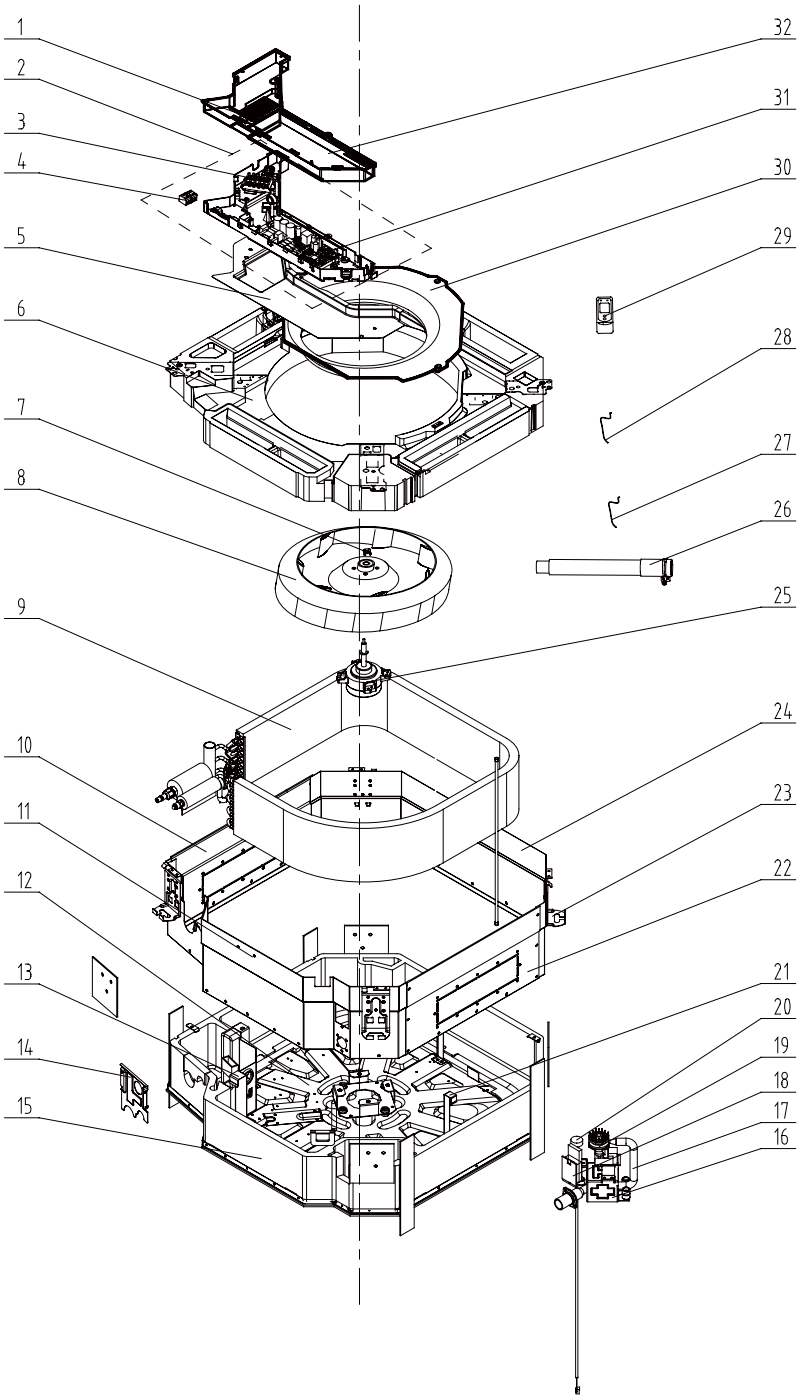

## MUCSR-42-H3
UI20847

| Nº | Descripción | Ud. | Ref. Proveedor | Código |
|---|---|---|---|---|
| 1 | Electric Box Cover Sub-Assy1 | 1 | 20122054 | |
| 2 | Electric Box Assy (Conjunto eléctrico) | 1 | 01399400057 | CL98314 |
| 3 | Terminal Board | 1 | 4201025801 | |
| 4 | Terminal Board | 1 | 4201025301 | |
| 5 | Electric Box Base Plate | 1 | 01412721 | |
| 6 | Water Tray Assy | 1 | 20182701 | |
| 7 | Fan Fixer | 1 | 10312701 | |
| 8 | Centrifugal Fan (Ventilador centrifugo) | 1 | 10310101 | CL98323 |
| 9 | Evaporator Assy | 1 | 01029400042 | |
| 10 | Left Side Plate Assy | 1 | 01302711 | |
| 11 | Front Side Plate | 1 | 01302713 | |
| 12 | Base Plate Assy | 1 | 01222701 | |
| 13 | Evaporator Linkage | 1 | 01072732 | |
| 14 | Tube Exit Plate Assy | 1 | 01382715 | |
| 15 | Bottom Foam Assy | 1 | 52012721 | |
| 16 | Water Pump Mounting Rack | 1 | 01332721 | |
| 17 | Drain Pipe for Water Pump | 1 | 05230026 | |
| 18 | Pump Backup Cover Plate Assy | 1 | 01252713 | |
| 19 | Water Pump (Bomba de condensados) | 1 | 43130324 | CL98412 |
| 20 | Water Level Switch (Interruptor de nivel) | 1 | 45018012 | CL98391 |
| 21 | Evaporator of Fixed Mount | 2 | 01072707 | |
| 22 | Right Side Plate Assy | 1 | 01302712 | |
| 23 | Major Mounting Plate | 4 | 01332701 | |
| 24 | Rear Side Plate | 1 | 01302709 | |
| 25 | Brushless DC Motor (Motor ventilador) | 1 | 15709400003 | CL98351 |
| 26 | Drain Hose Assy | 1 | 05232702 | |
| 27 | Room Sensor (Sensor temperatura ambiente) | 1 | 390001912 | CL98377 |
| 28 | Tube sensor (Sensor temperatura tubería) | 1 | 390001921G | CL98379 |
| 29 | Remote Controller (Control remoto) | 1 | 305100413W | CL98372 |
| 30 | Diversion Circle | 1 | 10372722 | |
| 31 | Main Board (Placa electrónica) | 1 | 30224000028 | CL98361 |
| 32 | Electric Box Cover Sub-Assy2 | 1 | 20122055 | |

**MUCSR-48-H3**
**UI20848**

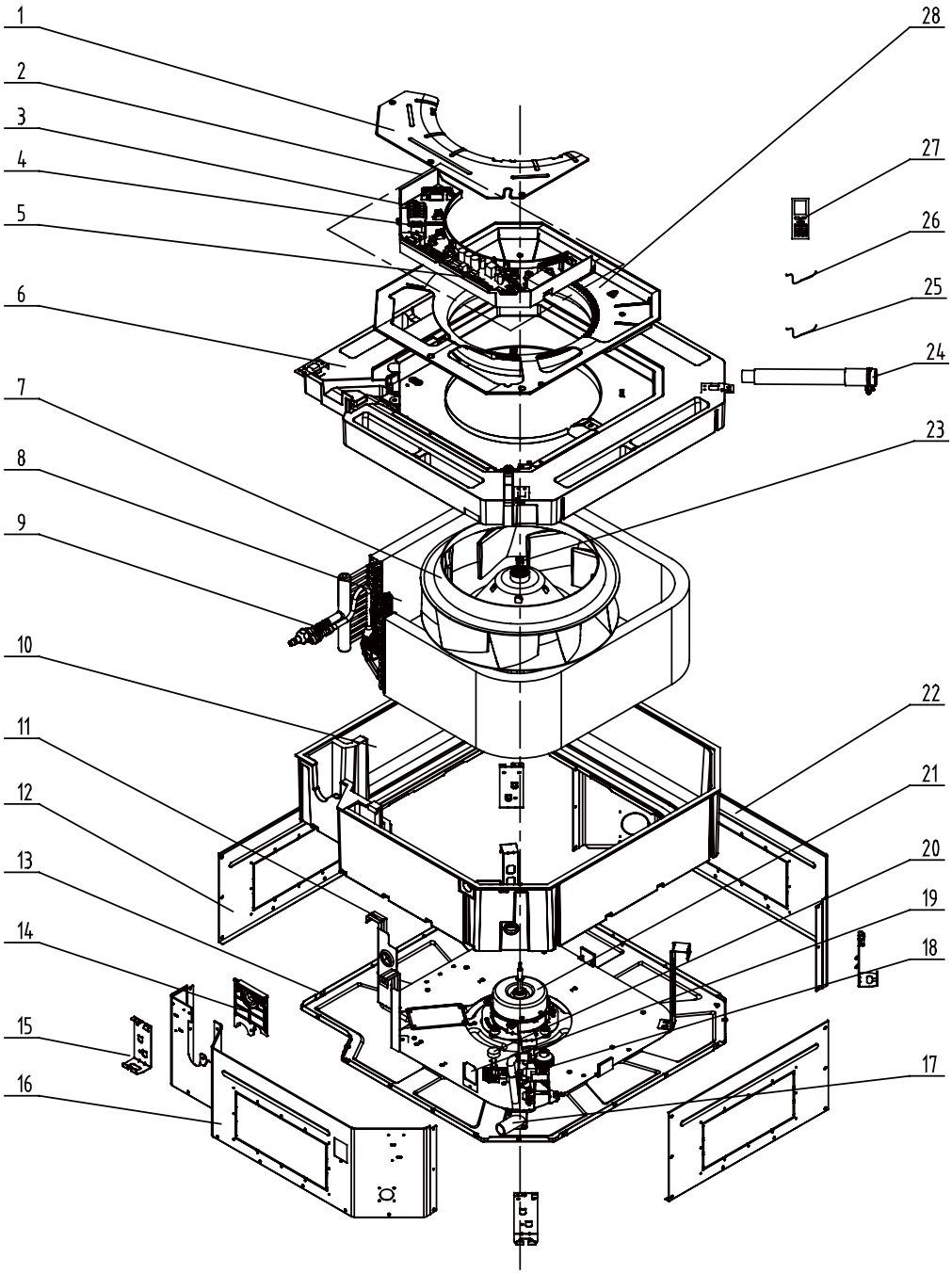

## MUCSR-48-H3
UI20848

| Nº | Descripción | Ud. | Ref. Proveedor | Código |
|---|---|---|---|---|
| 1 | Electric Box Cover Plate | 1 | 01429423P | |
| 2 | Electric Box Assy (Conjunto eléctrico) | 1 | 01399400074 | CL98317 |
| 3 | Terminal Board | 1 | 4201025801 | |
| 4 | Terminal Board | 1 | 4201025301 | |
| 5 | Main Board (Placa electrónica) | 1 | 30224000028 | CL98361 |
| 6 | Water Tray Assy | 1 | 01289400002 | |
| 7 | Centrifugal Fan (Ventilador centrifugo) | 1 | 10429401 | CL98334 |
| 8 | Evaporator Assy | 1 | 01029400054 | |
| 9 | Filter | 1 | 07212403 | |
| 10 | Foam Assy | 1 | 12509400001 | |
| 11 | Connection Sheet Sub-Assy | 1 | 01349400002 | |
| 12 | Left and Right Side Board | 2 | 01319448 | |
| 13 | Seat Board Sub-Assy | 1 | 02229400001 | |
| 14 | Tube Exit Plate Sub-Assy | 1 | 02229400002 | |
| 15 | Body Installing Plate | 4 | 01329420 | |
| 16 | Front Side Plate | 1 | 01319447 | |
| 17 | Drainage Hose | 1 | 05339401 | |
| 18 | Water Pump Assy (Conjunto bomba de condensados) | 1 | 15409400001 | CL98340 |
| 19 | Pump Cover Board Assy | 1 | 0125271301 | |
| 20 | Liquid Level Switch Sub-assy | 1 | 45018000001 | |
| 21 | Brushless DC Motor (Motor ventilador) | 1 | 15709400002 | CL98350 |
| 22 | Rear Side Plate | 1 | 01319446 | |
| 23 | Fan Fixer | 1 | 10312701 | |
| 24 | Drain Hose Assy | 1 | 05232702 | |
| 25 | Room Sensor (Sensor temperatura ambiente) | 1 | 390001912 | CL98377 |
| 26 | Temperature Sensor (Sensor temperatura tubería)) | 1 | 390001921G | CL98379 |
| 27 | Remote Controller (Control remoto) | 1 | 305100413 | CL98372 |
| 28 | Diversion Circle | 1 | 10479401 | |

**MUCSR-60-H3**
**UI20849**

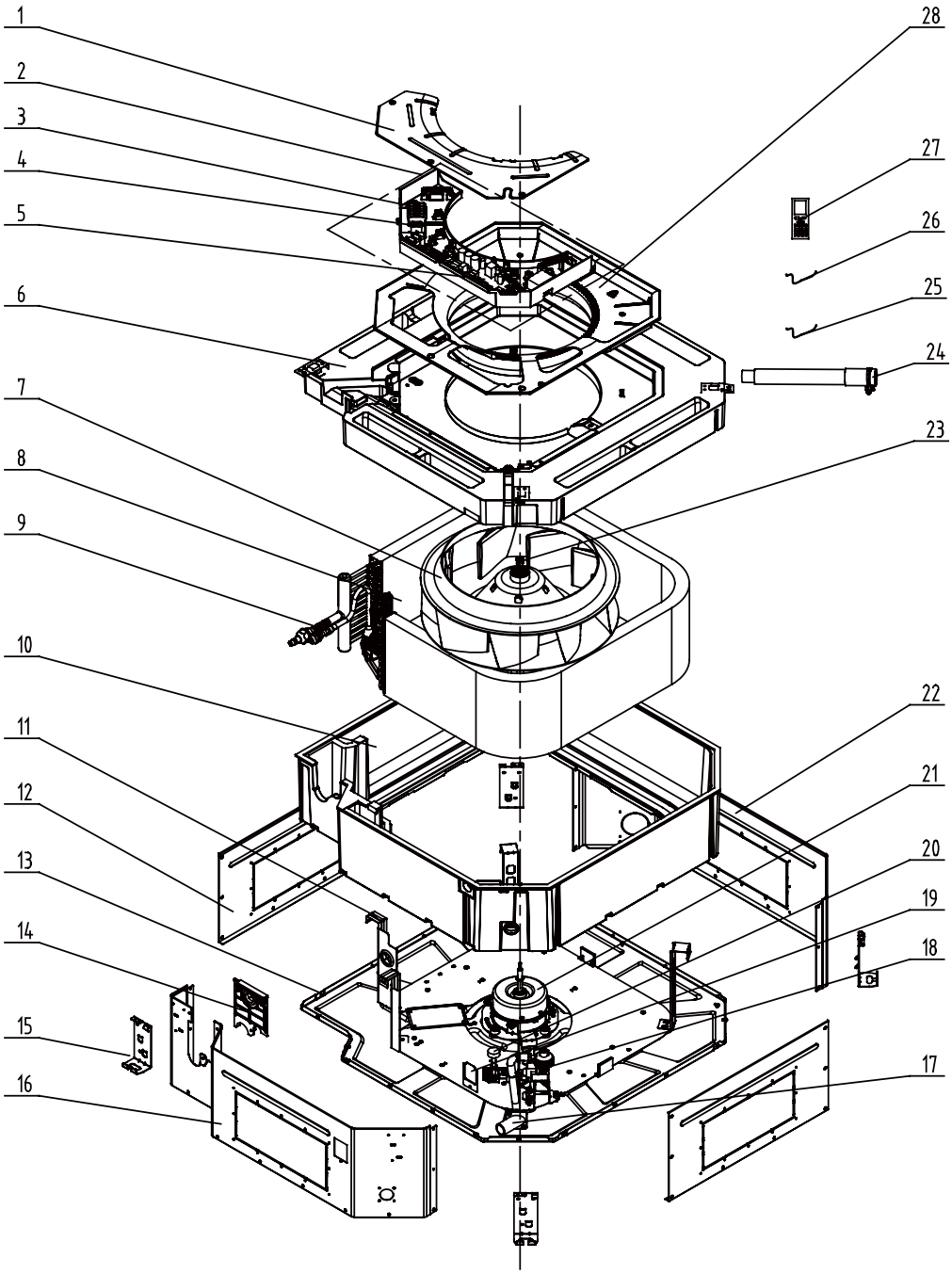

## MUCSR-60-H3
UI20849

| Nº | Descripción | Ud. | Ref. Proveedor | Código |
|---|---|---|---|---|
| 1 | Electric Box Cover Plate | 1 | 01429423P | |
| 2 | Electric Box Assy (Conjunto eléctrico) | 1 | 01399400074 | CL98317 |
| 3 | Terminal Board | 1 | 4201025801 | |
| 4 | Terminal Board | 1 | 4201025301 | |
| 5 | Main Board (Placa electrónica) | 1 | 30224000028 | CL98361 |
| 6 | Water Tray Assy | 1 | 01289400002 | |
| 7 | Centrifugal Fan (Ventilador centrifugo) | 1 | 10429401 | CL98334 |
| 8 | Evaporator Assy | 1 | 0102940005401 | |
| 9 | Filter | 1 | 07212403 | |
| 10 | Foam Assy | 1 | 12509400001 | |
| 11 | Connection Sheet Sub-Assy | 1 | 01349400002 | |
| 12 | Left and Right Side Board | 2 | 01319448 | |
| 13 | Seat Board Sub-Assy | 1 | 02229400001 | |
| 14 | Tube Exit Plate Sub-Assy | 1 | 02229400002 | |
| 15 | Body Installing Plate | 4 | 01329420 | |
| 16 | Front Side Plate | 1 | 01319447 | |
| 17 | Drainage Hose | 1 | 05339401 | |
| 18 | Water Pump Assy (Conjunto bomba de condensados) | 1 | 15409400001 | CL98340 |
| 19 | Pump Cover Board Assy | 1 | 0125271301 | |
| 20 | Liquid Level Switch Sub-assy | 1 | 45018000001 | |
| 21 | Brushless DC Motor (Motor ventilador) | 1 | 15709400002 | CL98350 |
| 22 | Rear Side Plate | 1 | 01319446 | |
| 23 | Fan Fixer | 1 | 10312701 | |
| 24 | Drain Hose Assy | 1 | 05232702 | |
| 25 | Room Sensor (Sensor temperatura ambiente) | 1 | 390001912 | 390001912 |
| 26 | Temperature Sensor (Sensor temperatura tubería) | 1 | 390001921G | CL98379 |
| 27 | Remote Controller (Control remoto) | 1 | 305100413_K96109 | |
| 28 | Diversion Circle | 1 | 10479401 | |

## MUCSR-12-H3 (Panel TC03)
## MUCSR-18-H3 (Panel TC03)

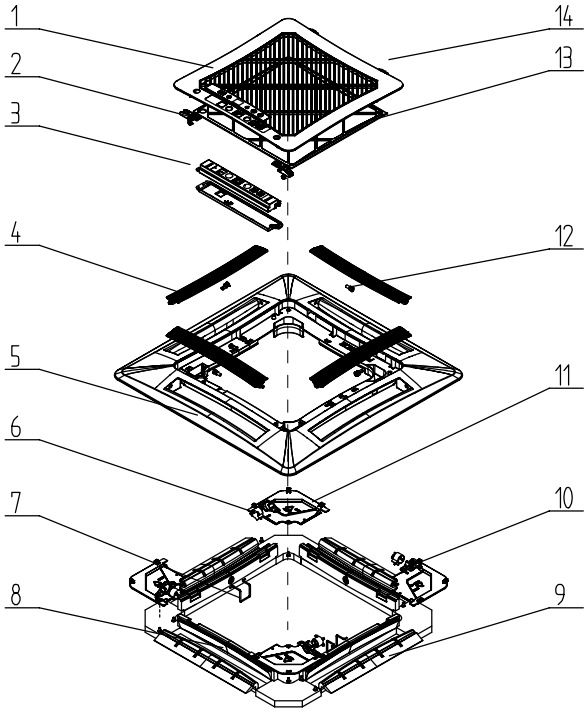


| N | Descripción | Ud. | Ref. Proveedor | Código |
|---|---|---|---|---|
| 1 | Front Grill | 1 | 26909400010 | |
| 2 | Clamp Sub-Assy | 2 | 02209400001 | |
| 3 | Receiver Board | 1 | 30261016 | CL98064 |
| 4 | Guide Louver | 4 | 26909400014 | |
| 5 | Front Case | 1 | 26909400009 | |
| 6 | Step Motor | 4 | 15729401 | |
| 7 | Hook | 2 | 02229400009 | |
| 8 | Foam | 4 | 12509400006 | |
| 9 | Foam | 4 | 12509400007 | |
| 10 | Motor Press Cover | 4 | 26909400012 | |
| 11 | Corner Cover | 4 | 26909400011 | |
| 12 | Axile Bush | 4 | 10542036 | |
| 13 | Filter Sub-Assy | 1 | 11729400001 | |
| 14 | Front Grill Assy | 1 | 01579400002 | |

## MUCSR-24/30/36/42-H3 (Panel TC04)

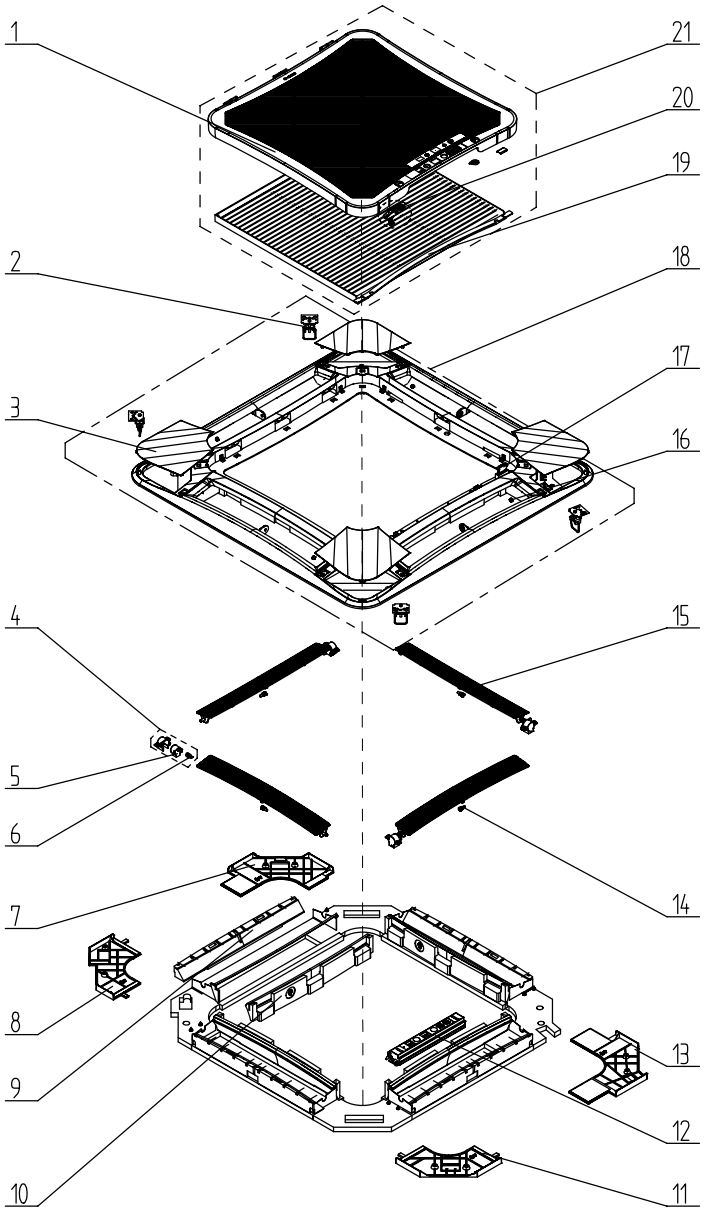


| N | Descripción | Ud. | Ref. Proveedor | Código |
|---|---|---|---|---|
| 1 | Front Grill | 1 | 26909466 | |
| 2 | Hanging Ring | 4 | 70810101 | |
| 3 | Outer Corner Cover Sub-Assy | 4 | 01269410 | |
| 4 | Louver Motor  Sub-assy | 4 | 15409407 | |
| 5 | Step Motor | 1 | 15729401 | |
| 6 | Crank | 1 | 10582070 | |
| 7 | Inner Corner Cover Sub-Assy IV | 1 | 01269411 | |
| 8 | Inner Corner Cover Sub-Assy III | 1 | 01269412 | |
| 9 | Air Outle Foamt 1 | 4 | 52069409 | |
| 10 | Air Outle Foamt 2 | 4 | 52069410 | |
| 11 | Inner Corner Cover Sub-Assy III | 1 | 01269413 | |
| 12 | Display Board | 1 | 30261016 | CL98064 |
| 13 | Inner Corner Cover Sub-Assy I | 1 | 01269414 | |
| 14 | Axile Bush | 4 | 10542036 | |
| 15 | Guide Louver | 4 | 10619406 | |
| 16 | Left Axile Bush | 4 | 10512037 | |
| 17 | Magnet Sub-assy | 1 | 70842705 | |
| 18 | Front Panel Assy | 1 | 01549401 | |
| 19 | Filter Sub-Assy | 1 | 11729405 | |
| 20 | Clamp Sub-Assy | 1 | 02209402 | |
| 21 | Front Grill Assy | 1 | 01579400004 | |

## MUCSR-48/60-H3 (Panel TC05)

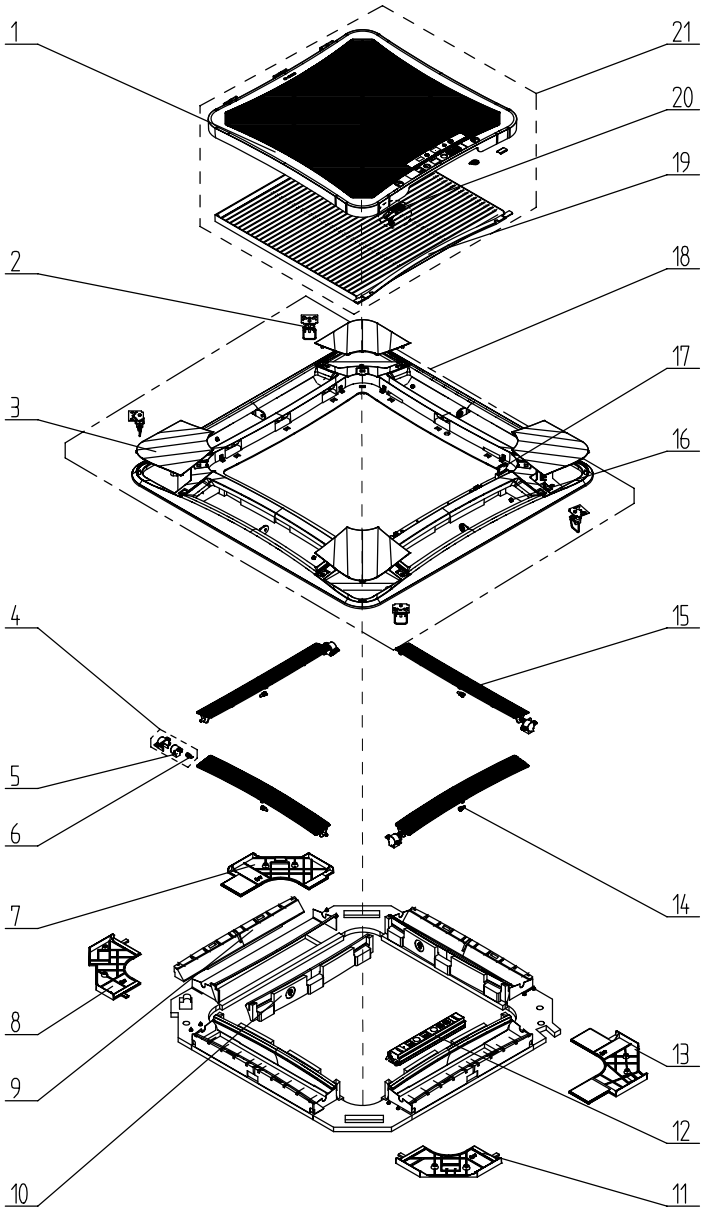


| N | Descripción | Ud. | Ref. Proveedor | Código |
|---|---|---|---|---|
| 1 | Front Grill | 1 | 26909486 | |
| 2 | Hanging Ring | 4 | 70810101 | |
| 3 | Outer Corner Cover Sub-Assy | 4 | 01269400001 | |
| 4 | Louver Motor  Sub-assy | 4 | 15409407 | |
| 5 | Step Motor | 1 | 15729401 | |
| 6 | Crank | 1 | 10582070 | |
| 7 | Inner Corner Cover Sub-Assy IV | 0 | none | |
| 8 | Inner Corner Cover Sub-Assy III | 1 | 26909490 | |
| 9 | Air Outle Foamt 1 | 0 | none | |
| 10 | Air Outle Foamt 2 | 0 | none | |
| 11 | Inner Corner Cover Sub-Assy III | 2 | 26909491 | |
| 12 | Display Board | 1 | 30261016 | CL98064 |
| 13 | Inner Corner Cover Sub-Assy I | 1 | 26909492 | |
| 14 | Axile Bush | 4 | 10542036 | |
| 15 | Guide Louver | 4 | 26909493 | |
| 16 | Left Axile Bush | 4 | 10512037 | |
| 17 | Magnet Sub-assy | 0 | none | |
| 18 | Front Panel Assy | 1 | 01549400001 | |
| 19 | Filter Sub-Assy | 1 | 11729406 | |
| 20 | Clamp Sub-Assy | 0 | none | |
| 21 | Front Grill Assy | 1 | 01579400003 | |

## MUSTR-18-H3
UI20853

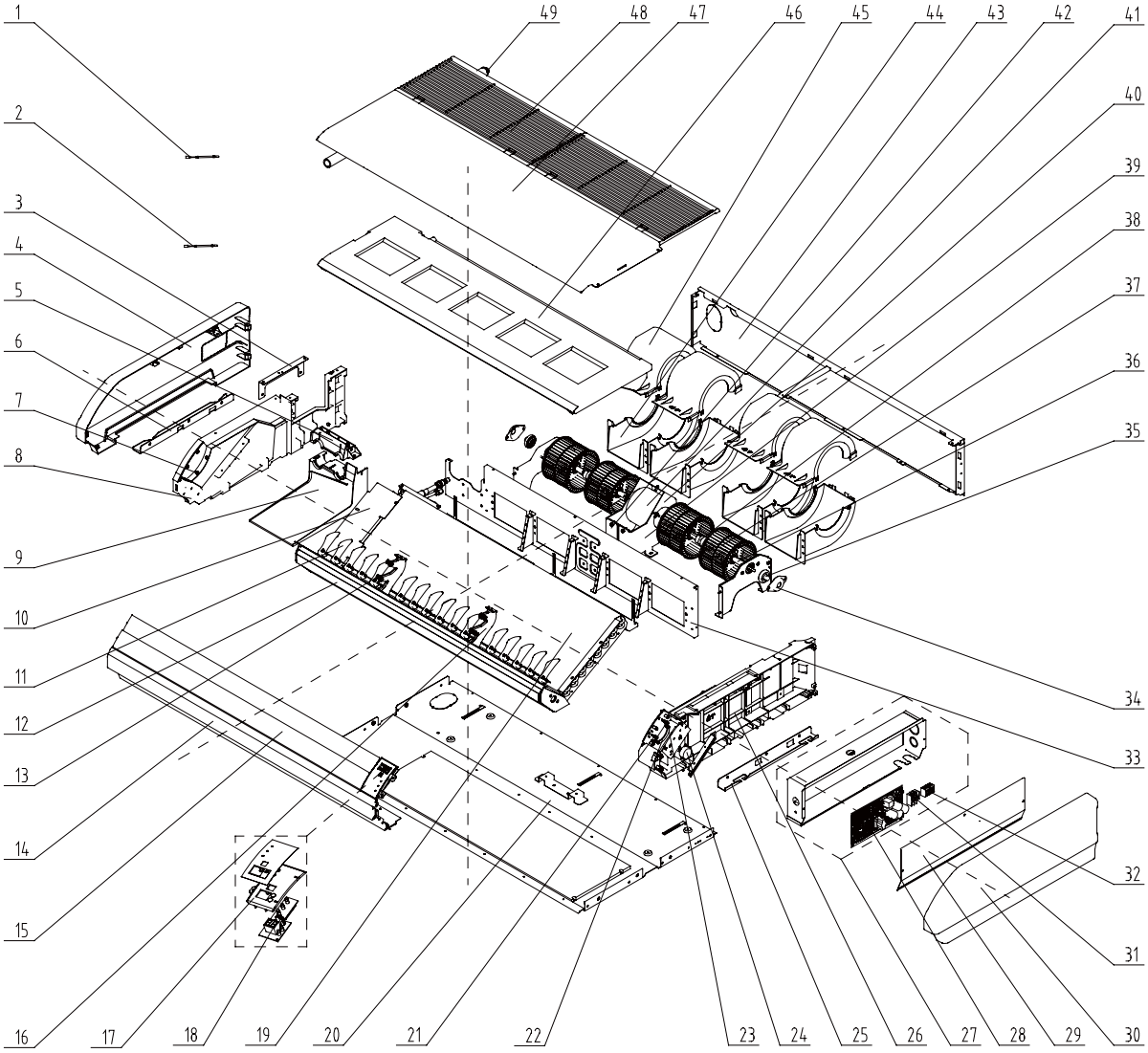

## MUSTR-18-H3
UI20853

| Nº | Descripción | Ud. | Ref. Proveedor | Código |
|---|---|---|---|---|
| 1 | Tube sensor (Sensor temperatura tubería) | 1 | 3900020720G | CL98381 |
| 2 | Room Sensor (Sensor temperatura ambiente) | 1 | 39000191 | CL98376 |
| 3 | Connection Board | 1 | 02229406 | |
| 4 | Right Cover Plate | 1 | 26909444 | |
| 5 | Fixed Plate | 1 | 26909442 | |
| 6 | Right Pensile Bracket | 1 | 01809402 | |
| 7 | Axile Bush | 2 | 10542704 | |
| 8 | Right Side Plate Sub-Assy | 1 | 01319429 | |
| 9 | Water Releasing Flume | 1 | 02284106P | |
| 10 | Connected Board (Evaporator) | 1 | 01349421 | |
| 11 | Air Louver | 16 | 10619404 | |
| 12 | Guide Louver Support | 1 | 0180941601 | |
| 13 | Rotating Shaft | 4 | 26909430 | |
| 14 | Front Connection Board | 1 | 01349414P | |
| 15 | Guide Louver | 2 | 10619403 | |
| 16 | Supporter | 2 | 26909449 | |
| 17 | Fixed Mount | 1 | 26909426R | |
| 18 | Display Board (Placa display) | 1 | 305100413W | CL98372 |
| 19 | Evaporator Assy | 1 | 01029468 | |
| 20 | Rear Side Plate Assy | 1 | 01319400008 | |
| 21 | Rotating Shaft | 1 | 26909413 | |
| 22 | Connecting Rod | 1 | 26909411 | |
| 23 | Rotating Shaft | 1 | 26909412 | |
| 24 | Step Motor (Motor lamas) | 1 | 1521240206 | CL98338 |
| 25 | Left Pensile Bracket | 1 | 01809401 | |
| 26 | Left Side Plate Sub-Assy | 1 | 01319428 | |
| 27 | Electric Box Assy (Conjunto eléctrico) | 1 | 01399400071 | CL98316 |
| 28 | Main Board (Placa electrónica) | 1 | 30224000029 | CL98362 |
| 29 | Electric Box Cover | 1 | 01429420 | |
| 30 | Left Cover Plate | 1 | 26909443 | |
| 31 | Terminal Board | 1 | 4201025301 | |
| 32 | Terminal Board | 1 | 42010178 | |
| 33 | Mid-clapboard sub-assy | 1 | 01249416 | |
| 34 | Support Of Motor Bearing | 2 | 01792408 | |
| 35 | O-Gasket of Bearing | 2 | 76512404 | |
| 36 | Rotary Axis Sub-Assy | 2 | 73018000037 | |
| 37 | Centrifugal fan (Ventilador centrifugo) | 4 | 10425200 | CL98331 |
| 38 | Joint Slack | 2 | 73018731 | |
| 39 | Supporter | 1 | 01809400024 | |
| 40 | Clamping Band Assembly | 1 | 70818000001 | |
| 41 | DC brushless Motor (Motor ventilador) | 1 | 15704100001 | CL98345 |
| 42 | Supporter | 1 | 01809400023 | |
| 43 | Rear connect plate | 1 | 01349422 | |
| 44 | Front volute casing | 4 | 26905205 | |
| 45 | Rear volute casing | 4 | 26905206 | |
| 46 | Water Tray Assy | 1 | 01289404 | |
| 47 | Top Cover Board Sub-assy | 1 | 01269409 | |
| 48 | Front Grill sub-assy | 2 | 01579403 | |
| 49 | Drainage Pipe Sub-assy | 1 | 05235434 | |

## MUSTR-24-H3
UI20854

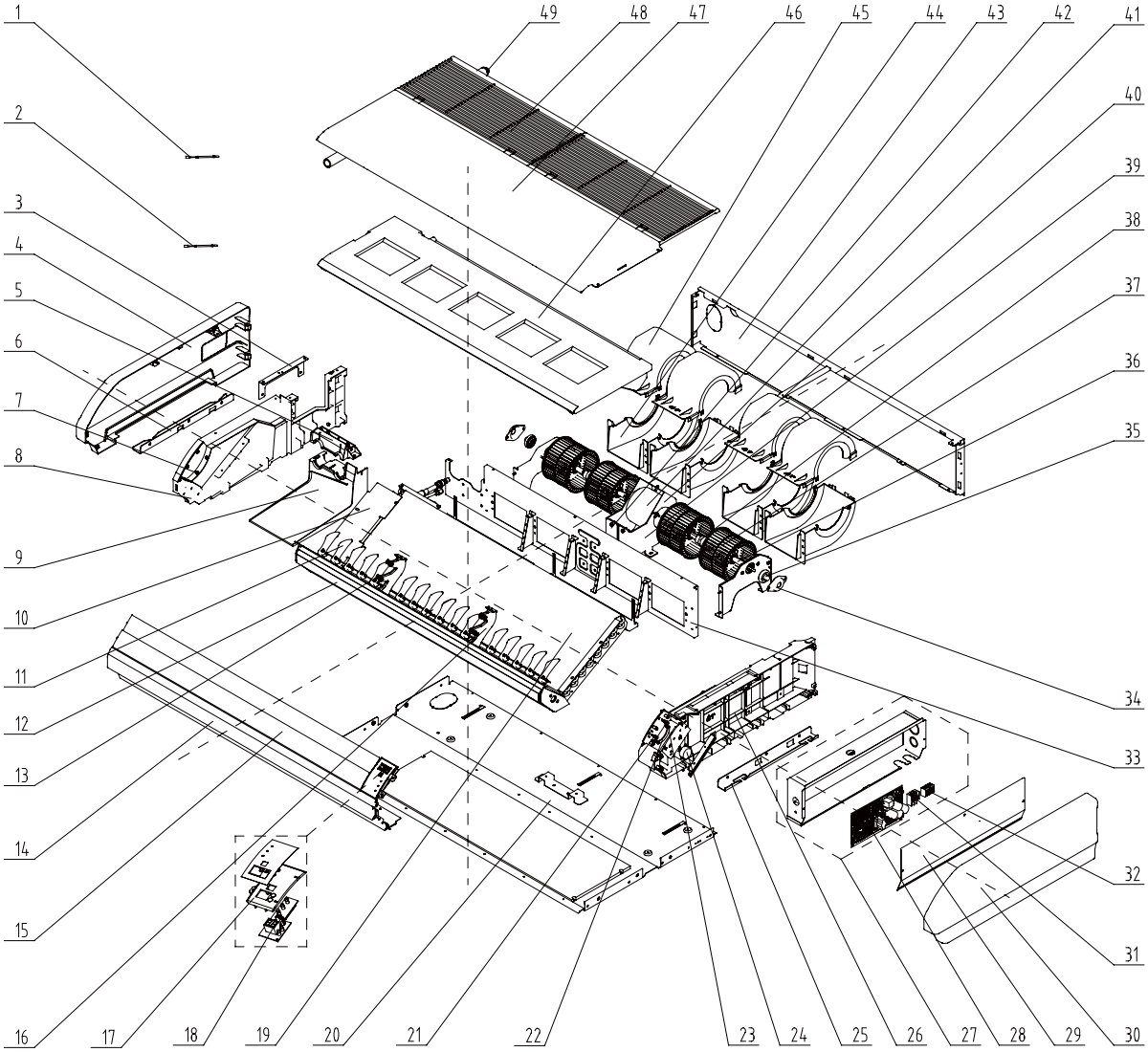

## MUSTR-24-H3
UI20854

| Nº | Descripción | Ud. | Ref. Proveedor | Código |
|---|---|---|---|---|
| 1 | Tube sensor (Sensor temperatura tubería) | 1 | 3900020720G | CL98381 |
| 2 | Room Sensor (Sensor temperatura ambiente) | 1 | 39000191 | CL98376 |
| 3 | Connection Board | 1 | 02229406 | |
| 4 | Right Cover Plate | 1 | 26909444 | |
| 5 | Fixed Plate | 1 | 26909442 | |
| 6 | Right Pensile Bracket | 1 | 01809402 | |
| 7 | Axile Bush | 2 | 10542704 | |
| 8 | Right Side Plate Sub-Assy | 1 | 01319429 | |
| 9 | Water Releasing Flume | 1 | 02284106P | |
| 10 | Connected Board (Evaporator) | 1 | 01349421 | |
| 11 | Air Louver | 16 | 10619404 | |
| 12 | Guide Louver Support | 1 | 0180941601 | |
| 13 | Rotating Shaft | 4 | 26909430 | |
| 14 | Front Connection Board | 1 | 01349414P | |
| 15 | Guide Louver | 2 | 10619403 | |
| 16 | Supporter | 2 | 26909449 | |
| 17 | Fixed Mount | 1 | 26909426R | |
| 18 | Display Board (Placa display) | 1 | 30294000009 | CL98371 |
| 19 | Evaporator Assy | 1 | 01029400046 | |
| 20 | Rear Side Plate Assy | 1 | 01319400008 | |
| 21 | Rotating Shaft | 1 | 26909413 | |
| 22 | Connecting Rod | 1 | 26909411 | |
| 23 | Rotating Shaft | 1 | 26909412 | |
| 24 | Step Motor (Motor lamas) | 1 | 1521240206 | CL98338 |
| 25 | Left Pensile Bracket | 1 | 01809401 | |
| 26 | Left Side Plate Sub-Assy | 1 | 01319428 | |
| 27 | Electric Box Assy (Conjunto eléctrico) | 1 | 01399400071 | CL98316 |
| 28 | Main Board (Placa electrónica) | 1 | 30224000029 | CL98362 |
| 29 | Electric Box Cover | 1 | 01429420 | |
| 30 | Left Cover Plate | 1 | 26909443 | |
| 31 | Terminal Board | 1 | 4201025301 | |
| 32 | Terminal Board | 1 | 42010178 | |
| 33 | Mid-clapboard sub-assy | 1 | 01249416 | |
| 34 | Support Of Motor Bearing | 2 | 01792408 | |
| 35 | O-Gasket of Bearing | 2 | 76512404 | |
| 36 | Rotary Axis Sub-Assy | 2 | 73018000037 | |
| 37 | Centrifugal fan (Ventilador centrifugo) | 4 | 10425200 | CL98331 |
| 38 | Joint Slack | 2 | 73018731 | |
| 39 | Supporter | 1 | 01809400024 | |
| 40 | Clamping Band Assembly | 1 | 70818000001 | |
| 41 | DC brushless Motor (Motor ventilador) | 1 | 15704100001 | CL98345 |
| 42 | Supporter | 1 | 01809400023 | |
| 43 | Rear connect plate | 1 | 01349422 | |
| 44 | Front volute casing | 4 | 26905205 | |
| 45 | Rear volute casing | 4 | 26905206 | |
| 46 | Water Tray Assy | 1 | 01289404 | |
| 47 | Top Cover Board Sub-assy | 1 | 01269409 | |
| 48 | Front Grill sub-assy | 2 | 01579403 | |
| 49 | Drainage Pipe Sub-assy | 1 | 05235434 | |
| | Remote Controller (Control remoto) | 1 | 305100413W | CL98372 |

## MUSTR-30-H3
**UI20855**

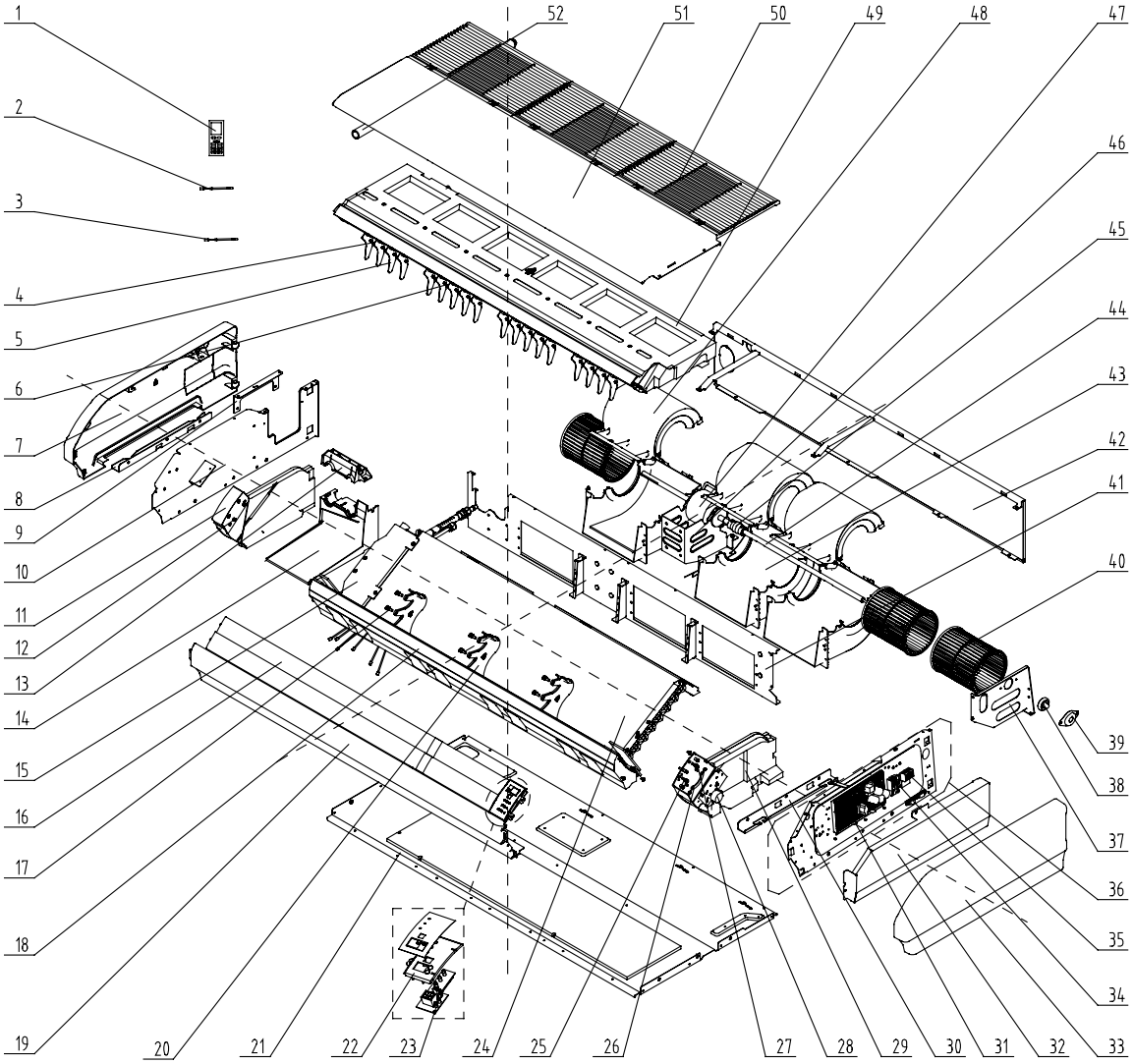

## MUSTR-30-H3
UI20855

| Nº | Descripción | Ud. | Ref. Proveedor | Código |
|---|---|---|---|---|
| 1 | Drainage Pipe Sub-assy | 1 | 05235434 | |
| 2 | Tube sensor (Sensor temperatura tubería) | 1 | 3900020720G | CL98381 |
| 3 | Room Sensor (Sensor temperatura ambiente) | 1 | 39000191 | CL98376 |
| 4 | Swing Lever | 2 | 10582008 | |
| 5 | Air Louver | 18 | 26909418 | |
| 6 | Swing Lever | 2 | 10582009 | |
| 7 | Right Cover | 1 | 26909422 | |
| 8 | Right Pensile Bracket | 1 | 01809402 | |
| 9 | Connection Board | 1 | 02229406 | |
| 10 | Right Side Plate Sub-Assy | 1 | 01319408 | |
| 11 | Right foam assy | 1 | 12509425 | |
| 12 | Axile Bush | 2 | 10542704 | |
| 13 | Fixed Plate | 1 | 26909442 | |
| 14 | Water Groove | 1 | 26909441 | |
| 15 | Connection Board | 1 | 01349413 | |
| 16 | Guide Louver | 2 | 26909432 | |
| 17 | Rotating Shaft | 6 | 26909430 | |
| 18 | Front foam assy | 1 | 12509424 | |
| 19 | Front panel | 1 | 01349408P | |
| 20 | Supporter | 3 | 26909409 | |
| 21 | Rear Side Plate Assy | | 01319400005 | |
| 22 | Fixed Mount | 1 | 26909426R | |
| 23 | Display Board (Placa display) | 1 | 30294000009 | CL98371 |
| 24 | Evaporator Assy | 1 | 01029400041 | |
| 25 | Rotating Shaft | 1 | 26909413 | |
| 26 | Connecting Rod | 1 | 26909411 | |
| 27 | Rotating Shaft | 1 | 26909412 | |
| 28 | Step Motor (Motor lamas) | 1 | 1521240206 | CL98338 |
| 29 | Left Foam Assy | 1 | 12509408 | |
| 30 | Left Pensile Bracket | 1 | 01809401 | |
| 31 | Main Board (Placa electrónica) | 1 | 30224000029 | CL98362 |
| 32 | Electric Box Cover | 1 | 01429410P | |
| 33 | Left Cover | 1 | 26909416 | |
| 34 | Terminal Board | 1 | 42010178 | |
| 35 | Terminal Board | | 4201025301 | |
| 36 | Electric Box Assy (Conjunto eléctrico) | 1 | 01399400058 | CL98315 |
| 37 | Bracket 1 | 1 | 01809404 | |
| 38 | O-Gasket of Bearing | 1 | 76512404 | |
| 39 | Support Of Motor Bearing | 1 | 01792408 | |
| 40 | Centrifugal fan (Ventilador centrifugo) | 3 | 1041410101 | CL98329 |
| 41 | Clapboard Sub-Assy | | 01249400002 | |
| 42 | Rear connect plate | 1 | 01349418 | |
| 43 | Front volute casing | 3 | 26905208 | |
| 44 | Joint Slack | 1 | 73018731 | |
| 45 | Motor Support Sub-Assy | 1 | 01809400027 | |
| 46 | DC brushless Motor (Motor ventilador) | 1 | 15705200005 | CL98348 |
| 47 | Motor Support Sub-Assy | 1 | 01809400028 | |
| 48 | Rotary Axis Sub-Assy | 1 | 73018052 | |
| 49 | Rear volute casing | 3 | 26909419 | |
| 50 | Water tray assy | 1 | 01289405 | |
| 51 | Front Grill sub-assy | 3 | 01579402 | |
| 52 | Top Cover Board Sub-assy | 1 | 01269405 | |
| | Remote Controller (Control remoto) | 1 | 305100413W | CL98372 |

**MUSTR-36-H3**
**UI20856**

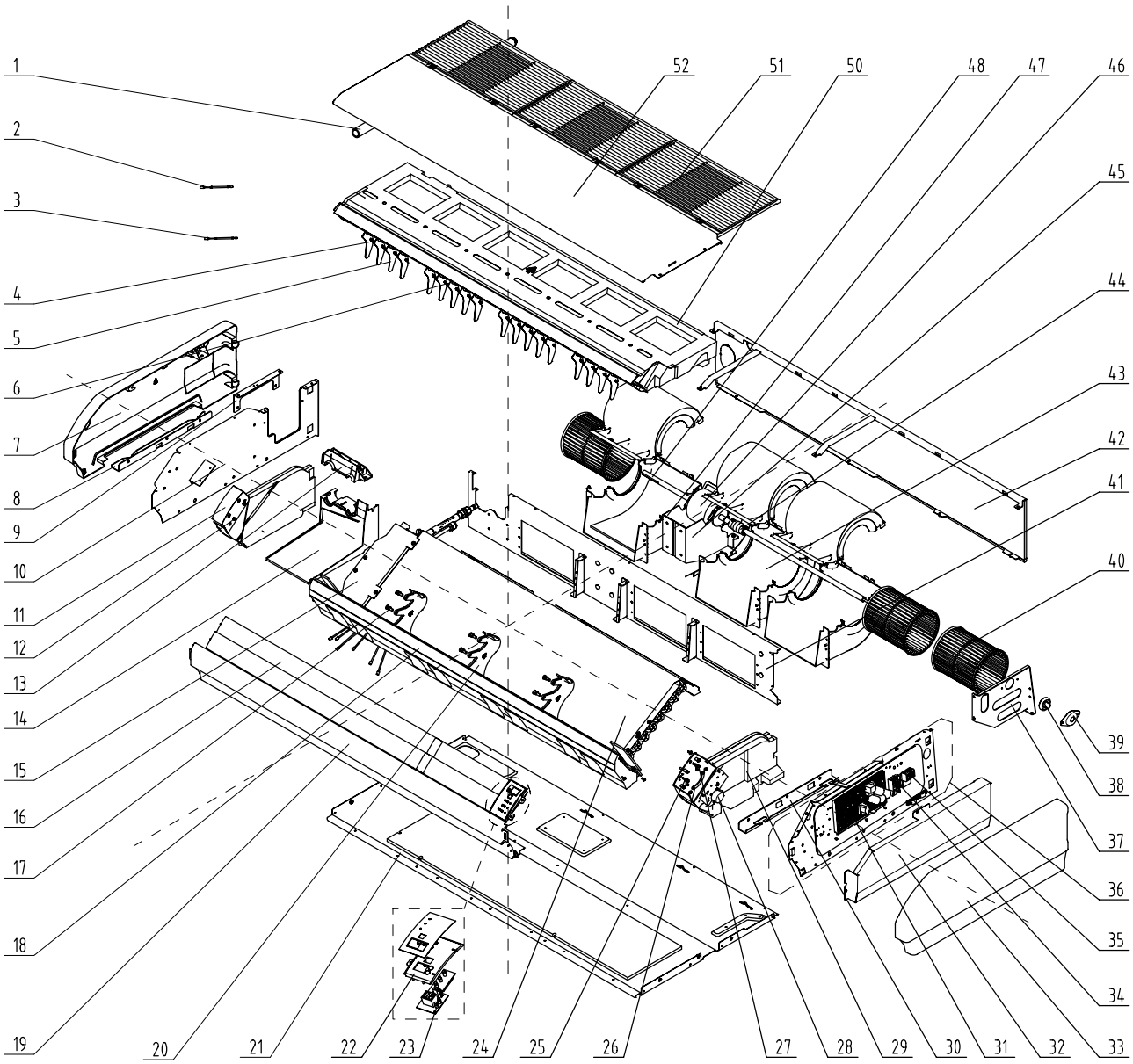

## MUSTR-36-H3
UI20856

| Nº | Descripción | Ud. | Ref. Proveedor | Código |
|---|---|---|---|---|
| 1 | Drainage Pipe Sub-assy | 1 | 05235434 | |
| 2 | Tube sensor (Sensor temperatura tubería) | 1 | 3900020720G | CL98381 |
| 3 | Room Sensor (Sensor temperatura ambiente) | 1 | 39000191 | CL98376 |
| 4 | Swing Lever | 2 | 10582008 | |
| 5 | Air Louver | 18 | 26909418 | |
| 6 | Swing Lever | 2 | 10582009 | |
| 7 | Right Cover | 1 | 26909422 | |
| 8 | Right Pensile Bracket | 1 | 01809402 | |
| 9 | Connection Board | 1 | 02229406 | |
| 10 | Right Side Plate Sub-Assy | 1 | 01319408 | |
| 11 | Right foam assy | 1 | 12509425 | |
| 12 | Axile Bush | 2 | 10542704 | |
| 13 | Fixed Plate | 1 | 26909442 | |
| 14 | Water Groove | 1 | 26909441 | |
| 15 | Connection Board | 1 | 01349413 | |
| 16 | Guide Louver | 2 | 26909432 | |
| 17 | Rotating Shaft | 6 | 26909430 | |
| 18 | Front foam assy | 1 | 12509424 | |
| 19 | Front panel | 1 | 01349408P | |
| 20 | Supporter | 3 | 26909409 | |
| 21 | Rear Side Plate Assy | | 01319400005 | |
| 22 | Fixed Mount | 1 | 26909426R | |
| 23 | Display Board (Placa display) | 1 | 30294000009 | CL98371 |
| 24 | Evaporator Assy | | 01029400050 | |
| 25 | Rotating Shaft | 1 | 26909413 | |
| 26 | Connecting Rod | 1 | 26909411 | |
| 27 | Rotating Shaft | 1 | 26909412 | |
| 28 | Step Motor (Motor lamas) | 1 | 1521240206 | CL98338 |
| 29 | Left Foam Assy | 1 | 12509408 | |
| 30 | Left Pensile Bracket | 1 | 01809401 | |
| 31 | Main Board (Placa electrónica) | 1 | 30224000029 | CL98362 |
| 32 | Electric Box Cover | 1 | 01429410P | |
| 33 | Left Cover | 1 | 26909416 | |
| 34 | Terminal Board | 1 | 42010178 | |
| 35 | Terminal Board | | 4201025301 | |
| 36 | Electric Box Assy (Conjunto eléctrico) | 1 | 01399400058 | CL98315 |
| 37 | Bracket 1 | 1 | 01809404 | |
| 38 | O-Gasket of Bearing | 1 | 76512404 | |
| 39 | Support Of Motor Bearing | 1 | 01792408 | |
| 40 | Centrifugal fan (Ventilador centrifugo) | 3 | 1041410101 | CL98329 |
| 41 | Clapboard Sub-Assy | | 01249400002 | |
| 42 | Rear connect plate | 1 | 01349418 | |
| 43 | Front volute casing | 3 | 26905208 | |
| 44 | Joint Slack | 1 | 73018731 | |
| 45 | Motor Support Sub-Assy | 1 | 01809400027 | |
| 46 | DC brushless Motor (Motor ventilador) | 1 | 15705200005 | CL98348 |
| 47 | Motor Support Sub-Assy | 1 | 01809400028 | |
| 48 | Rotary Axis Sub-Assy | 1 | 73018052 | |
| 49 | Rear volute casing | 3 | 26909419 | |
| 50 | Water tray assy | 1 | 01289405 | |
| 51 | Front Grill sub-assy | 3 | 01579402 | |
| 52 | Top Cover Board Sub-assy | 1 | 01269405 | |
| | Remote Controller (Control remoto) | 1 | 305100413W | CL98372 |

**MUSTR-42-H3**
**UI20857**

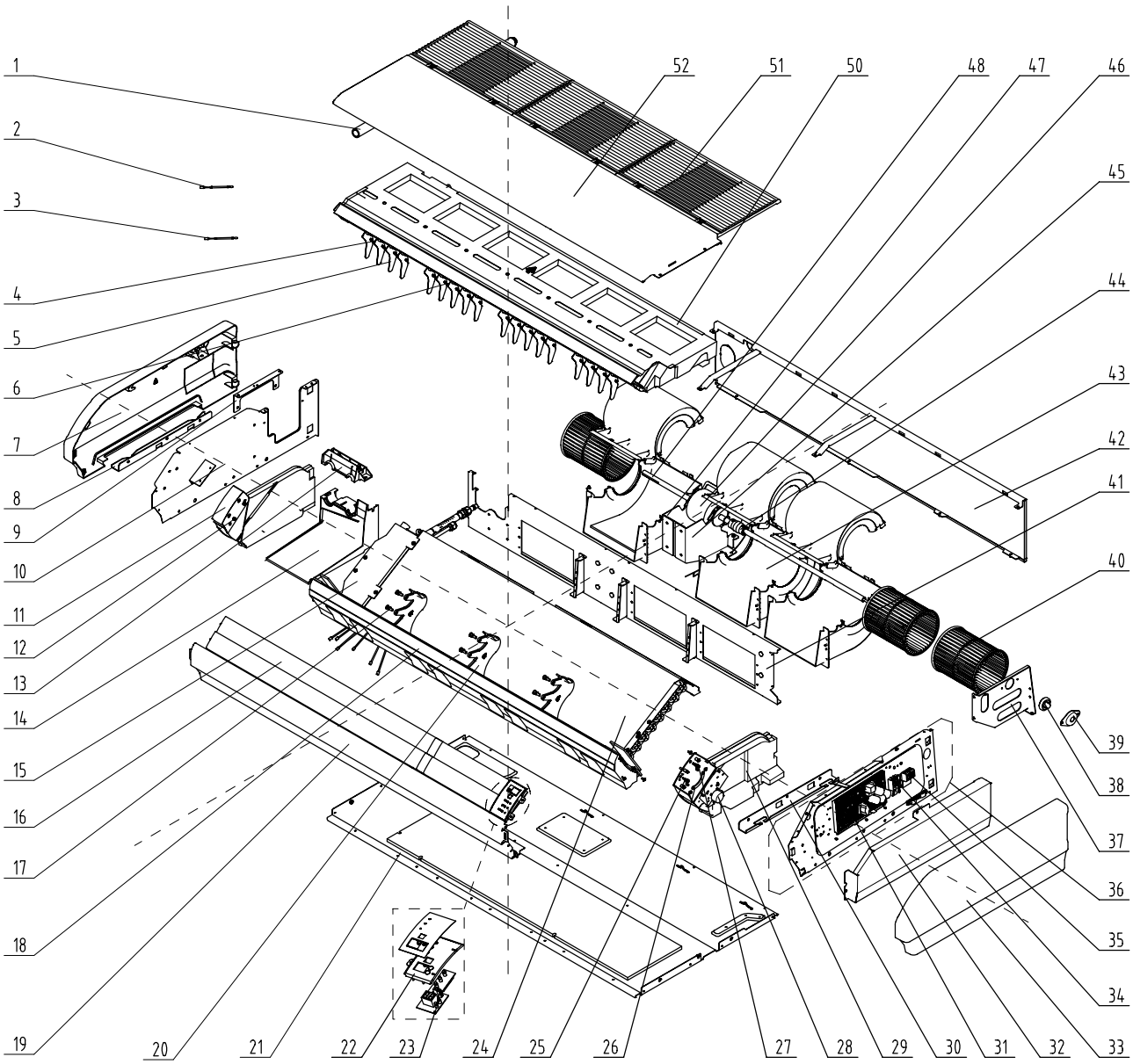

## MUSTR-42-H3
UI20857

| Nº | Descripción | Ud. | Ref. Proveedor | Código |
|---|---|---|---|---|
| 1 | Drainage Pipe Sub-assy | 1 | 05235434 | |
| 2 | Tube sensor (Sensor temperatura tubería) | 1 | 390001923 | CL98380 |
| 3 | Room Sensor (Sensor temperatura ambiente) | 1 | 39000191 | CL98376 |
| 4 | Swing Lever | 2 | 10582008 | |
| 5 | Air Louver | 18 | 26909418 | |
| 6 | Swing Lever | 2 | 10582009 | |
| 7 | Right Cover | 1 | 26909422 | |
| 8 | Right Pensile Bracket | 1 | 01809402 | |
| 9 | Connection Board | 1 | 02229406 | |
| 10 | Right Side Plate Sub-Assy | 1 | 01319408 | |
| 11 | Right foam assy | 1 | 12509425 | |
| 12 | Axile Bush | 2 | 10542704 | |
| 13 | Fixed Plate | 1 | 26909442 | |
| 14 | Water Groove | 1 | 26909441 | |
| 15 | connected board (evaporator) | 1 | 01349413 | |
| 16 | Guide Louver | 2 | 26909432 | |
| 17 | Rotating Shaft | 6 | 26909430 | |
| 18 | Front foam assy | 1 | 12509424 | |
| 19 | Front panel | 1 | 01349408P | |
| 20 | Supporter | 3 | 26909409 | |
| 21 | Rear side plate assy | 1 | 01319400005 | |
| 22 | Fixed Mount | 1 | 26909426R | |
| 23 | Display Board (Placa display) | 1 | 30294000009 | CL98371 |
| 24 | Evaporator Assy | 1 | 01029400049 | |
| 25 | Rotating Shaft | 1 | 26909413 | |
| 26 | Connecting Rod | 1 | 26909411 | |
| 27 | Rotating Shaft | 1 | 26909412 | |
| 28 | Step Motor (Motor lamas) | 1 | 1521240206 | CL98338 |
| 29 | Left Foam Assy | 1 | 12509408 | |
| 30 | Left Pensile Bracket | 1 | 01809401 | |
| 31 | Main Board (Placa electrónica) | 1 | 30224000029 | CL98362 |
| 32 | Electric Box Cover | 1 | 01429410P | |
| 33 | Left Cover | 1 | 26909416 | |
| 34 | Terminal Board | 1 | 42010178 | |
| 35 | Terminal Board | 1 | 4201025301 | |
| 36 | Electric Box Assy (Conjunto eléctrico) | 1 | 01399400058 | |
| 37 | Bracket 1 | 1 | 01809404 | |
| 38 | O-Gasket of Bearing | 1 | 76512404 | |
| 39 | Support Of Motor Bearing | 1 | 01792408 | |
| 40 | Centrifugal fan (Ventilador centrifugo) | 3 | 1041410101 | CL98329 |
| 41 | Clapboard Sub-Assy | 1 | 01249400002 | |
| 42 | Rear connect plate | 1 | 01349418 | |
| 43 | Front volute casing | 3 | 26905208 | |
| 44 | Joint Slack | 1 | 73018731 | |
| 45 | Motor Support Sub-Assy | 1 | 01809400029 | |
| 46 | DC brushless Motor (Motor ventilador) | 1 | 15705200005 | CL98348 |
| 47 | Motor Support Sub-Assy | 1 | none | |
| 48 | Rotary Axis Sub-Assy | 1 | 73018052 | |
| 49 | Rear volute casing | 3 | 26909419 | |
| 50 | Water tray assy | 1 | 01289405 | |
| 51 | Front Grill sub-assy | 3 | 01579402 | |
| 52 | Top Cover Board Sub-assy | 1 | 01269405 | |

## MUSTR-48-H3
UI20858

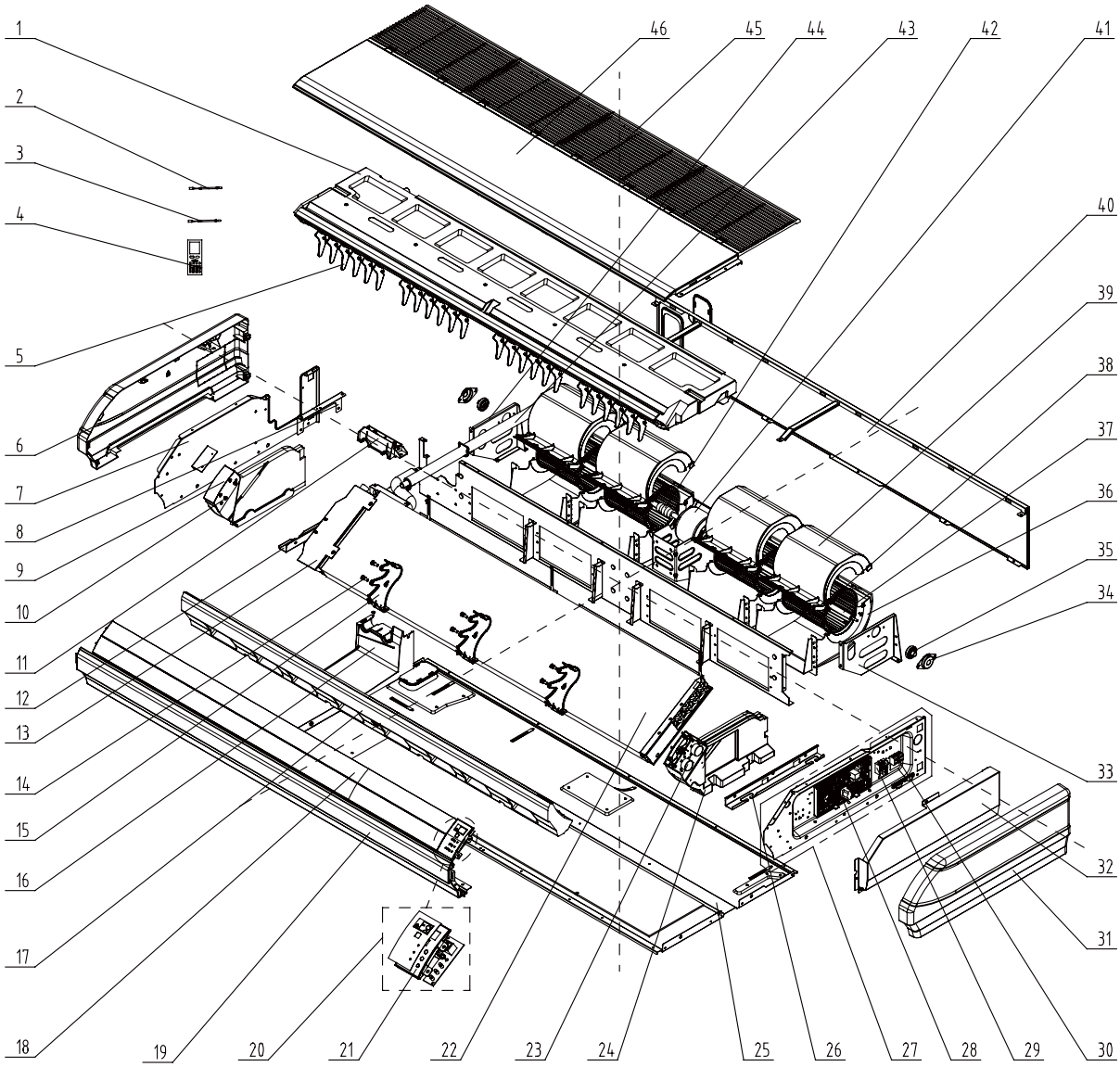

## MUSTR-48-H3
UI20858

| Nº | Descripción | Ud. | Ref. Proveedor | Código |
|---|---|---|---|---|
| 1 | Water tray assy | 1 | 01289401 | |
| 2 | Tube sensor (Sensor temperatura tubería) | 1 | 3900020720G | CL98381 |
| 3 | Room Sensor (Sensor temperatura ambiente) | 1 | 39000191 | CL98376 |
| 4 | Remote Controller (Control remoto) | 1 | 305100413W | CL98372 |
| 5 | Air Louver | 24 | 26909418 | |
| 6 | Right Cover | 1 | 26909422 | |
| 7 | Right Side Plate Sub-Assy | 1 | 01319408 | |
| 8 | Connection Board | 1 | 02229406 | |
| 9 | Right foam assy | 1 | 12509425 | |
| 10 | Axile Bush | 2 | 10542704 | |
| 11 | Fixed Plate | 1 | 26909442 | |
| 12 | Right Pensile Bracket | 1 | 01809402 | |
| 13 | connected board (evaporator) | 1 | 01349412 | |
| 14 | Rotating Shaft | 6 | 26909430 | |
| 15 | Supporter | 3 | 26909409 | |
| 16 | Water Groove | 1 | 26909441 | |
| 17 | Front Connection Board Foam Assy | 1 | 12509434 | |
| 18 | Guide Louver | 2 | 10619405 | |
| 19 | Front Connection Board | 1 | 01349404P | |
| 20 | Display Board (Placa display) | 1 | 30294000009 | CL98371 |
| 21 | Fixed Mount | 1 | 26909426R | |
| 22 | Evaporator Assy | 1 | 0102947101 | |
| 23 | Step Motor (Motor lamas) | 2 | 1521240206 | CL98338 |
| 24 | Left Foam Assy | 1 | 12509437 | |
| 25 | Rear Side Plate Sub-Assy | 1 | 01319442 | |
| 26 | Installation Supporting Frame | 1 | 01809421 | |
| 27 | Electric Box Assy | 1 | 01399400073 | |
| 28 | Main Board (Placa electrónica) | 1 | 30224000029 | CL98362 |
| 29 | Terminal Board | 1 | 42010178 | |
| 30 | Terminal Board | 1 | 4201025301 | |
| 31 | Left Cover | 1 | 26909416 | |
| 32 | Electric Box Cover | 1 | 01429410P | |
| 33 | Bracket 1 | 1 | 01809404 | |
| 34 | Support Of Motor Bearing | 2 | 01792408 | |
| 35 | O-Gasket of Bearing | 2 | 76512404 | |
| 36 | Front volute casing | 4 | 26905208 | |
| 37 | Rotary Axis Sub-Assy | 2 | 73018052 | |
| 38 | Centrifugal fan (Ventilador centrifugo) | 4 | 1041410101 | CL98329 |
| 39 | Rear volute casing | 4 | 26909419 | |
| 40 | Rear Connection Board | 1 | 01349419 | |
| 41 | DC brushless Motor (Motor ventilador) | 1 | 15709400005 | CL98057 |
| 42 | Joint Slack | 2 | 73018731 | |
| 43 | Drainage Pipe Sub-assy | 1 | 05235434 | |
| 44 | Bracket | 1 | 01809403 | |
| 45 | Front Gill Sub-assy | 4 | 01579401 | |
| 46 | Top Cover Board Sub-assy | 1 | 01269400002 | |

## MUSTR-60-H3
UI20859

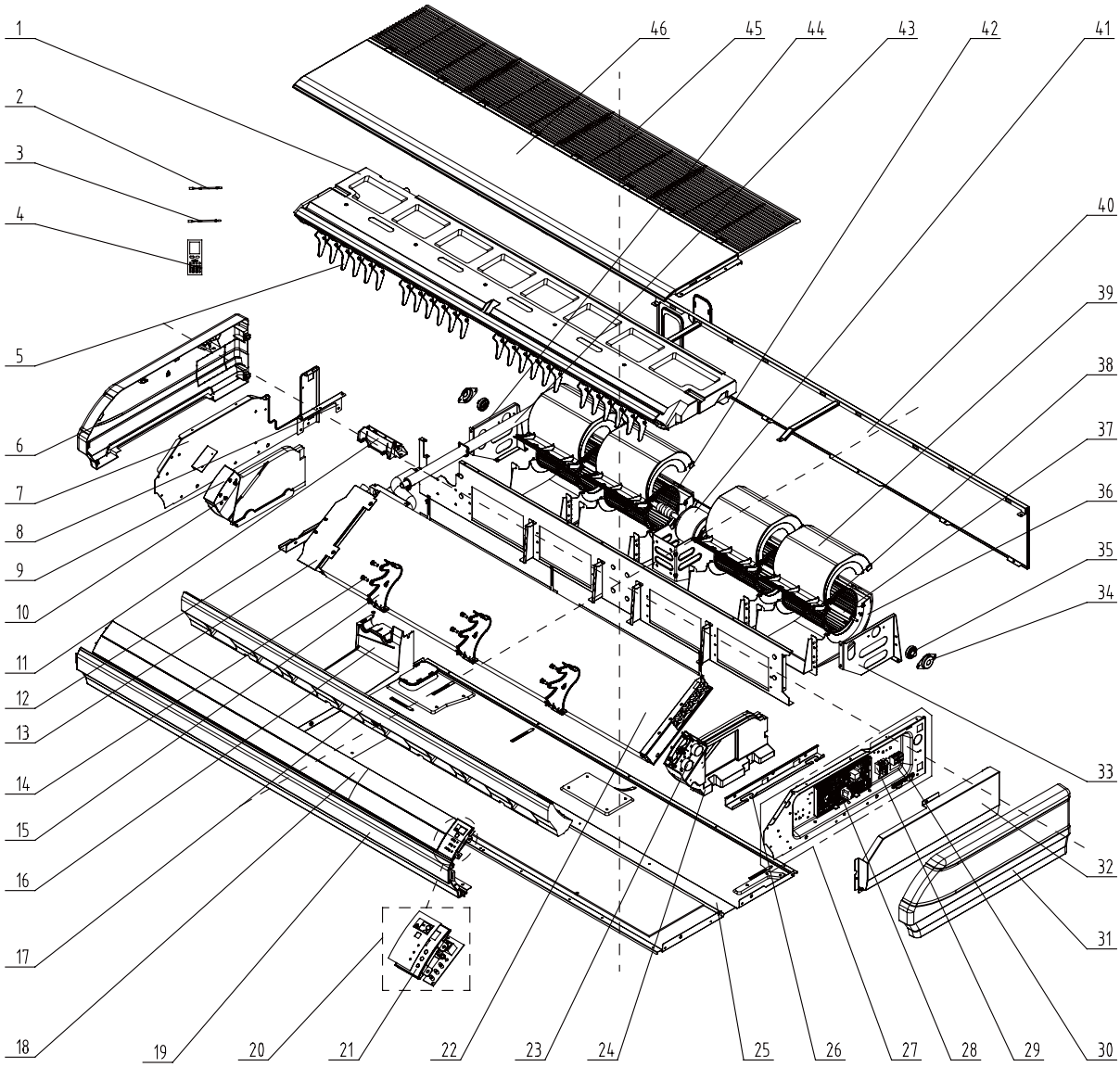

## MUSTR-60-H3
UI20859

| Nº | Descripción | Ud. | Ref. Proveedor | Código |
|---|---|---|---|---|
| 1 | Water tray assy | 1 | 01289401 | |
| 2 | Tube sensor (Sensor temperatura tubería) | 1 | 3900020720G | CL98381 |
| 3 | Room Sensor (Sensor temperatura ambiente) | 1 | 39000191 | CL98376 |
| 4 | Remote Controller | 1 | 305100413_K96109 | |
| 5 | Air Louver | 24 | 26909418 | |
| 6 | Right Cover | 1 | 26909422 | |
| 7 | Right Side Plate Sub-Assy | 1 | 01319408 | |
| 8 | Connection Board | 1 | 02229406 | |
| 9 | Right foam assy | 1 | 12509425 | |
| 10 | Axile Bush | 2 | 10542704 | |
| 11 | Fixed Plate | 1 | 26909442 | |
| 12 | Right Pensile Bracket | 1 | 01809402 | |
| 13 | connected board (evaporator) | 1 | 01349412 | |
| 14 | Rotating Shaft | 6 | 26909430 | |
| 15 | Supporter | 3 | 26909409 | |
| 16 | Water Groove | 1 | 26909441 | |
| 17 | Front Connection Board Foam | 1 | 12509434 | |
| 18 | Guide Louver | 2 | 10619405 | |
| 19 | Front Connection Board | 1 | 01349404P | |
| 20 | Display Board (Placa display) | 1 | 30294000009 | CL98371 |
| 21 | Fixed Mount | 1 | 26909426R | |
| 22 | Evaporator Assy | 1 | 0102947102 | |
| 23 | Step Motor (Motor lamas) | 2 | 1521240206 | CL98338 |
| 24 | Left Foam Assy | 1 | 12509437 | |
| 25 | Rear Side Plate Sub-Assy | 1 | 01319442 | |
| 26 | Left Mounting Support | 1 | 01809421 | |
| 27 | Electric Box Assy | 1 | 01399400073 | |
| 28 | Main Board (Placa electrónica) | 1 | 30224000029 | CL98362 |
| 29 | Terminal Board | 1 | 42010178 | |
| 30 | Terminal Board | 1 | 4201025301 | |
| 31 | Left Cover | 1 | 26909416 | |
| 32 | Electric Box Cover | 1 | 01429410P | |
| 33 | Bracket 1 | 1 | 01809404 | |
| 34 | Support Of Motor Bearing | 2 | 01792408 | |
| 35 | O-Gasket of Bearing | 2 | 76512404 | |
| 36 | Front volute casing | 4 | 26905208 | |
| 37 | Rotary Axis Sub-Assy | 2 | 73018052 | |
| 38 | Centrifugal fan (Ventilador centrifugo) | 4 | 1041410101 | CL98329 |
| 39 | Rear volute casing | 4 | 26909419 | |
| 40 | Rear Connection Board | 1 | 01349419 | |
| 41 | DC brushless Motor (Motor ventilador) | 1 | 15709400005 | CL98057 |
| 42 | Joint Slack | 2 | 73018731 | |
| 43 | Drainage Pipe Sub-assy | 1 | 05235434 | |
| 44 | Bracket | 1 | 01809403 | |
| 45 | Front Gill Sub-assy | 4 | 01579401 | |
| 46 | Top Cover Board Sub-assy | 1 | 01269400002 | |

## MUCR-12-H3
UI20862

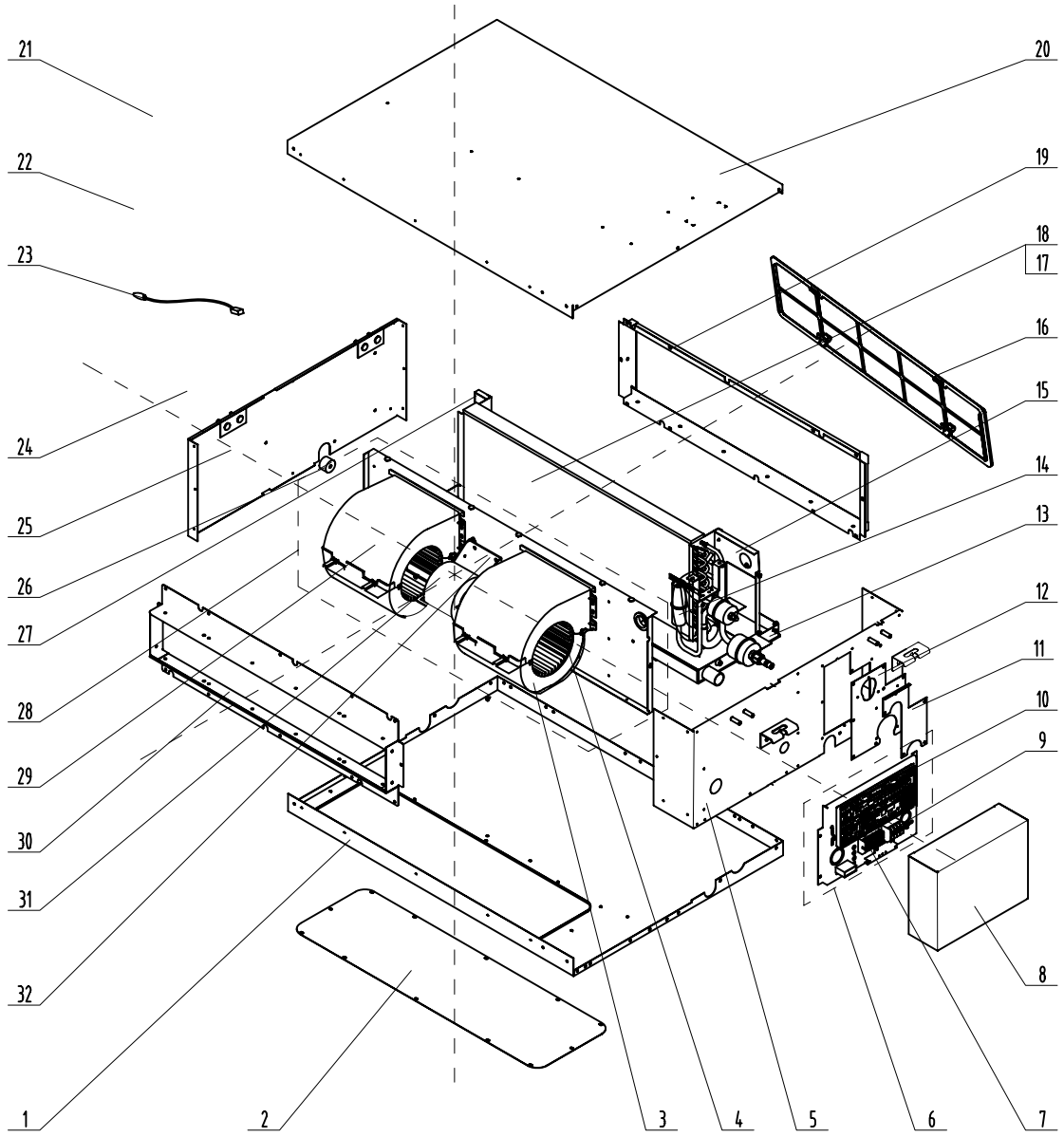

## MUCR-12-H3
UI20862

| Nº | Descripción | Ud. | Ref. Proveedor | Código |
|---|---|---|---|---|
| 1 | Bottom Cover Plate | 1 | 01265409 | |
| 2 | Cover of Air Intake | 1 | 01258650 | |
| 3 | Propeller Housing | 2 | 22202029 | |
| 4 | Centrifugal fan | 2 | 10319051 | CL96426 / CL98325 |
| 5 | Left Side Plate Sub-Assy | 1 | 01315200062 | |
| 6 | Electric Box Assy | 1 | 01395200239 | CL98311 |
| 7 | Terminal Board | 1 | 42010194 | |
| 8 | Electric Box Cover | 1 | 01425200050 | |
| 9 | Terminal Board | 1 | 4201025301 | |
| 10 | Main Board | 1 | 30224000030 | CL98363 |
| 13 | Water Tray Assy | 1 | 01285269 | |
| 14 | Filter | 1 | 07212121 | |
| 15 | left Supporting Board sub- assy of evaporator | 1 | 01805280 | |
| 16 | Filter sub-assy | 1 | 11725202 | |
| 17 | Evaporator Assy | 1 | 01025200057 | |
| 18 | Evaporator Assy | 1 | 01025401 | |
| 19 | side plate sub- assy of return air frame | 1 | 02225234 | |
| 20 | Top Cover Board Sub-Assy | 1 | 01265200095 | |
| 21 | Display Board | 1 | 30294000007 | CL98370 |
| 22 | Ambient Temperature Sensor | 1 | 3900012123 | CL98374 / CL96708 |
| 23 | Temperature Sensor | 1 | 390001921G | CL98379 |
| 24 | Hook | 4 | 02112446 | |
| 25 | Right Side Plate Assy | 1 | 01315200077 | |
| 26 | Choke Plug of Water Pipe | 1 | 76712454 | |
| 27 | Right Support of Evaporator | 1 | 01078625 | |
| 28 | Centrifugal Fan Assy | 1 | 15405200032 | |
| 29 | Front Volute Casing | 2 | 22202030 | |
| 30 | Air Intake Assy | 1 | 01498641 | |
| 31 | DC brushless Motor | 1 | 15704100001 | CL98345 |
| 32 | Motor Support Sub-assy | 2 | 01709056 | |

## MUCR-18-H3
UI20863

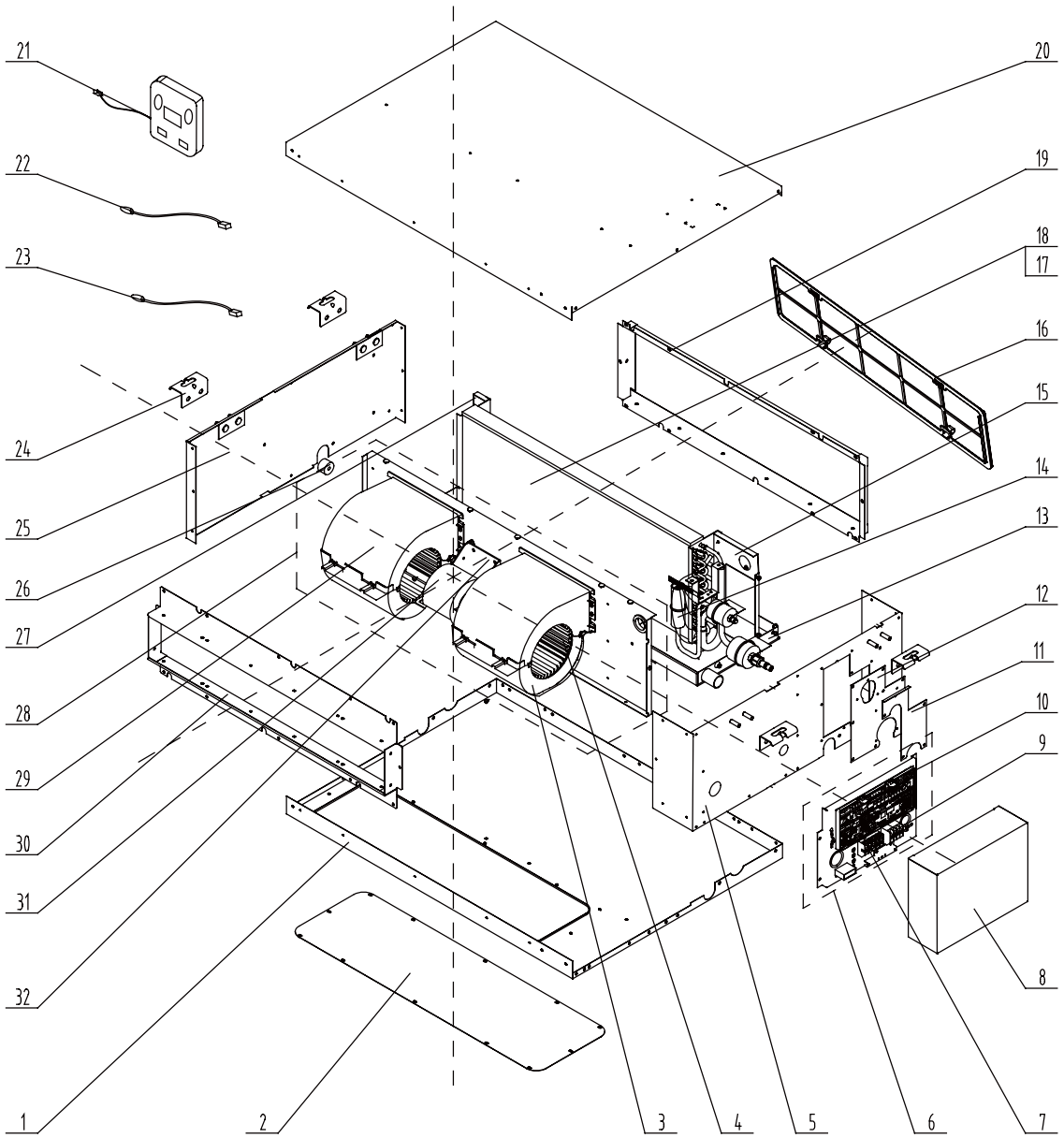

## MUCR-18-H3
UI20863

| Nº | Descripción | Ud. | Ref. Proveedor | Código |
|---|---|---|---|---|
| 1 | Bottom Cover Plate | 1 | 01265409 | |
| 2 | Cover of Air Intake | 1 | 01258650 | |
| 3 | Propeller Housing | 2 | 22202029 | |
| 4 | Centrifugal fan (Ventilador centrifugo) | 2 | 10319051 | CL98325 |
| 5 | Left Side Plate Sub-Assy | 1 | 01315200062 | |
| 6 | Electric Box Assy (Conjunto eléctrico) | 1 | 01395200239 | CL98311 |
| 7 | Terminal Board | 1 | 42010194 | |
| 8 | Electric Box Cover | 1 | 01425200050 | |
| 9 | Terminal Board | 1 | 4201025301 | |
| 10 | Main Board (Placa electrónica) | 1 | 30224000030 | CL98363 |
| 11 | Seal of Connection Pipe 1 | 1 | 01498640 | |
| 12 | Seal of Connection Pipe 2 | 1 | 01498644 | |
| 13 | Water Tray Assy | 1 | 01285269 | |
| 14 | Filter | 1 | 07212121 | |
| 15 | left Supporting Board sub- assy of evaporator | 1 | 01805280 | |
| 16 | Filter sub-assy | 1 | 11725202 | |
| 17 | Evaporator Assy | 1 | 01025200053 | |
| 18 | Evaporator Assy | 1 | 01025394 | |
| 19 | side plate sub- assy of return air frame | 1 | 02225234 | |
| 20 | Top Cover Board Sub-Assy | 1 | 01265200077 | |
| 21 | Display Board (Placa display) | 1 | 30294000007 | CL98370 |
| 22 | Ambient Temperature Sensor (Sensor temperatura ambiente) | 1 | 3900012123 | CL96708 |
| 23 | Temperature Sensor (Sensor temperatura tubería) | 1 | 390001921G | CL98379 |
| 24 | Hook | 4 | 02112446 | |
| 25 | Right Side Plate Assy | 1 | 01308670 | |
| 26 | Choke Plug of Water Pipe | 1 | 76712454 | |
| 27 | Right Support of Evaporator | 1 | 01078625 | |
| 28 | Centrifugal Fan Assy | 1 | 15405200031 | |
| 29 | Front Volute Casing | 2 | 22202030 | |
| 30 | Air Intake Assy | 1 | 01498641 | |
| 31 | DC Brushless Motor (Motor ventilador) | 1 | 15704100001 | CL98345 |
| 32 | Motor Support Sub-assy | 2 | 01709056 | |

## MUCR-24-H3
**UI20864**

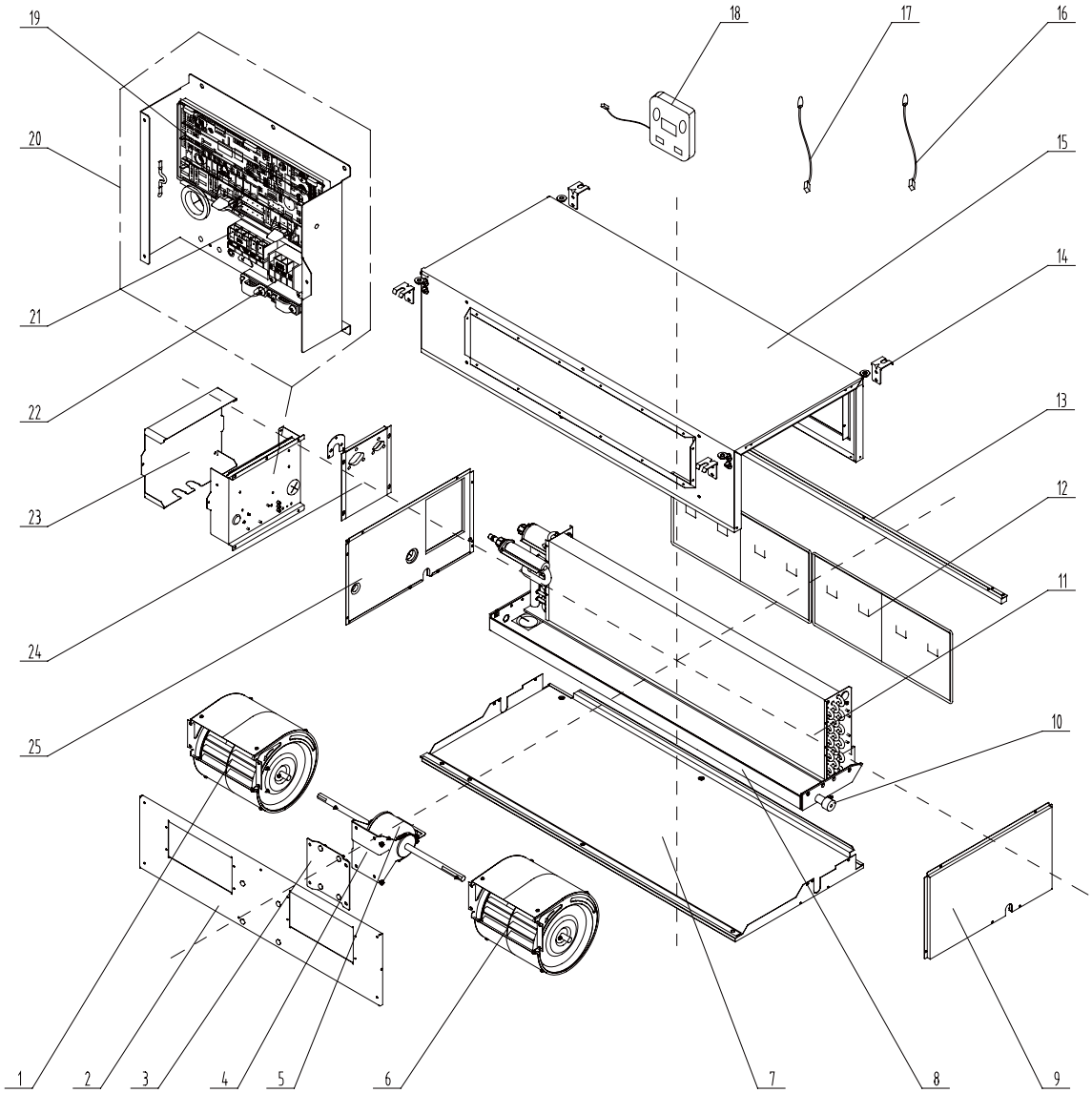

## MUCR-24-H3
UI20864

| Nº | Descripción | Ud. | Ref. Proveedor | Código |
|---|---|---|---|---|
| 1 | Motor(left) SYP-160/200J (Ventilador centrifugo izquierda) | 1 | 15012454 | CL98336 |
| 2 | Blower Mounting Plate Sub-Assy | 1 | 01325200039 | |
| 3 | Support Sub-assy | 1 | 01805200164 | |
| 4 | Supporter | 1 | 01804100140 | |
| 5 | DC Brushless Motor (Motor ventilador) | 1 | 15705200006 | CL98349 |
| 6 | Motor(right) SYP-160/200J (Ventilador centrifugo derecha) | 1 | 15012458 | CL98337 |
| 7 | Bottom Cover | 1 | 01265304 | |
| 8 | Water Tray Foam | 1 | 01285317 | |
| 9 | Left Side Plate | 1 | 01314155 | |
| 10 | Choke Plug of Drain Pipe | 1 | 76712455 | |
| 11 | Evaporator Assy | 1 | 01025200050 | |
| 12 | Filter Sub-assy | 2 | 11125303 | |
| 13 | Filter runner Assy | 1 | 02285301 | |
| 14 | Hook | 1 | 02112446 | |
| 15 | Upper Cover Plate Assy | 1 | 01265226 | |
| 16 | Temperature Sensor (Sensor temperatura tubería) | 1 | 3900012128 | CL98375 |
| 17 | Ambient Temperature Sensor (Sensor temperatura ambiente) | 1 | 3900012123 | CL96708 |
| 18 | Display Board (Placa display) | 1 | 30294000007 | CL98370 |
| 19 | Main Board (Placa electrónica) | 1 | 30224000030 | CL98363 |
| 20 | Electric Box Assy (Conjunto eléctrico) | 1 | 01395200212 | CL98310 |
| 21 | Terminal Board | 1 | 42010194 | |
| 22 | Terminal Board | 1 | 4201025301 | |
| 23 | Electric Box Cover | 1 | 01425200043 | |
| 24 | Cover Plate Sub-Assy | 1 | 01265200079 | |
| 25 | Right Side Plate Sub-Assy | 1 | 01315200057 | |

## MUCR-30-H3
**UI20865**

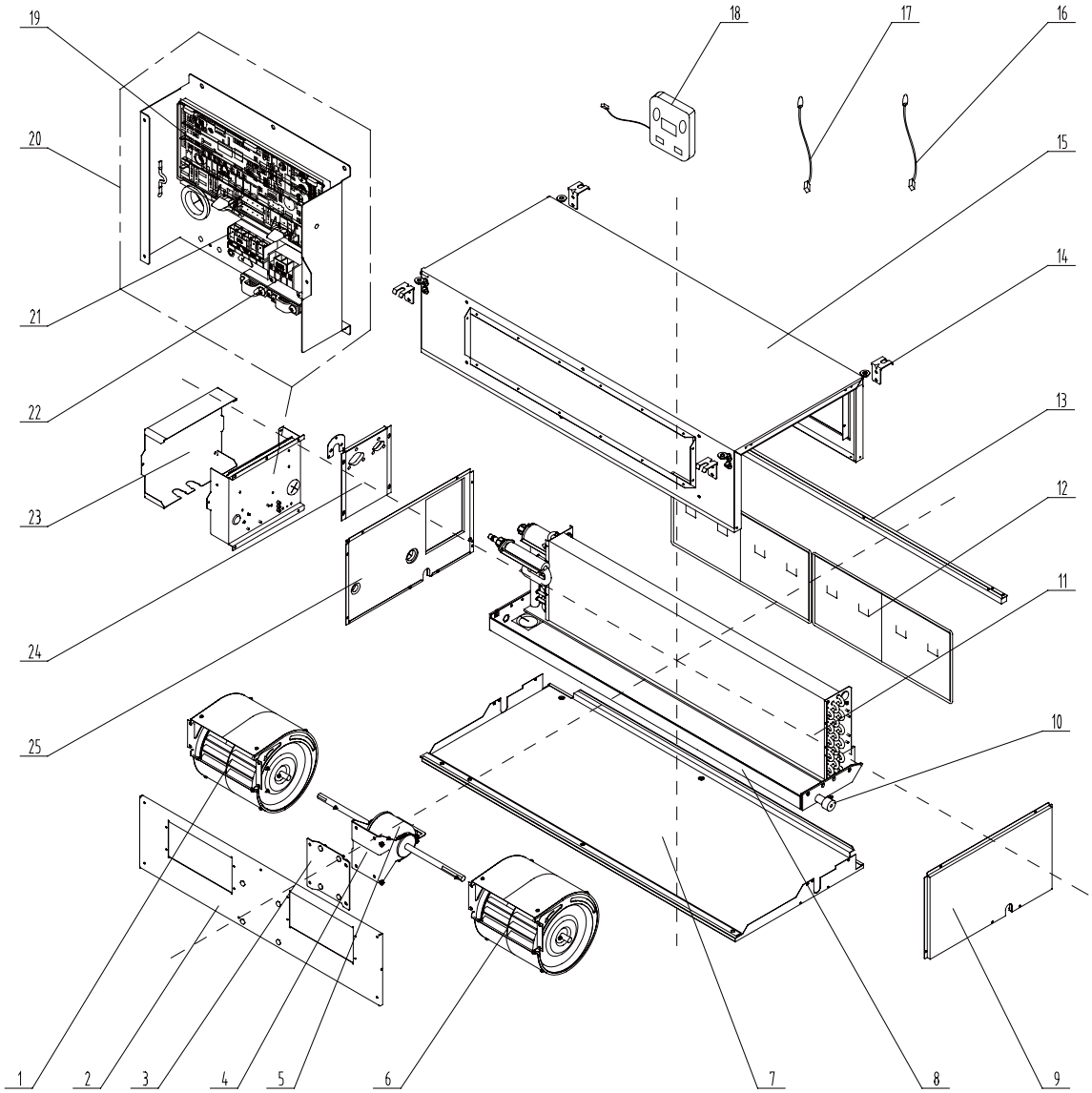

## MUCR-30-H3
UI20865

| Nº | Descripción | Ud. | Ref. Proveedor | Código |
|---|---|---|---|---|
| 1 | Motor(left) SYP-160/200J (Ventilador centrifugo izquierda) | 1 | 15012454 | CL98336 |
| 2 | Blower Mounting Plate Sub-Assy | 1 | 01325200039 | |
| 3 | Support Sub-assy | 1 | 01805200164 | |
| 4 | Supporter | 1 | 01804100140 | |
| 5 | Brushless DC Motor (Motor ventilador) | 1 | 15705200006 | CL98349 |
| 6 | Motor(right) SYP-160/200J (Ventilador centrifugo derecha) | 1 | 15012458 | CL98337 |
| 7 | Bottom Cover | 1 | 01265304 | |
| 8 | Water Tray Foam | 1 | 01285317 | |
| 9 | Left Side Plate | 1 | 01314155 | |
| 10 | Choke Plug of Drain Pipe | 1 | 76712455 | |
| 11 | Evaporator Assy | 1 | 01025200050 | |
| 12 | Filter Sub-assy | 2 | 11125303 | |
| 13 | Filter runner Assy | 1 | 02285301 | |
| 14 | Hook | 1 | 02112446 | |
| 15 | Upper Cover Plate Assy | 1 | 01265226 | |
| 16 | Temperature Sensor (Sensor temperatura tubería) | 1 | 3900012128 | CL98375 |
| 17 | Ambient Temperature Sensor (Sensor temperatura ambiente) | 1 | 3900012123 | CL96708 |
| 18 | Display Board (Placa display) | 1 | 30294000007 | CL98370 |
| 19 | Main Board (Placa electrónica) | 1 | 30224000030 | CL98363 |
| 20 | Electric Box Assy (Conjunto eléctrico) | 1 | 01395200212 | CL98310 |
| 21 | Terminal Board | 1 | 42010194 | |
| 22 | Terminal Board | 1 | 4201025301 | |
| 23 | Electric Box Cover | 1 | 01425200043 | |
| 24 | Cover Plate Sub-Assy | 1 | 01265200079 | |
| 25 | Right Side Plate Sub-Assy | 1 | 01315200057 | |

## MUCR-36-H3
UI20866

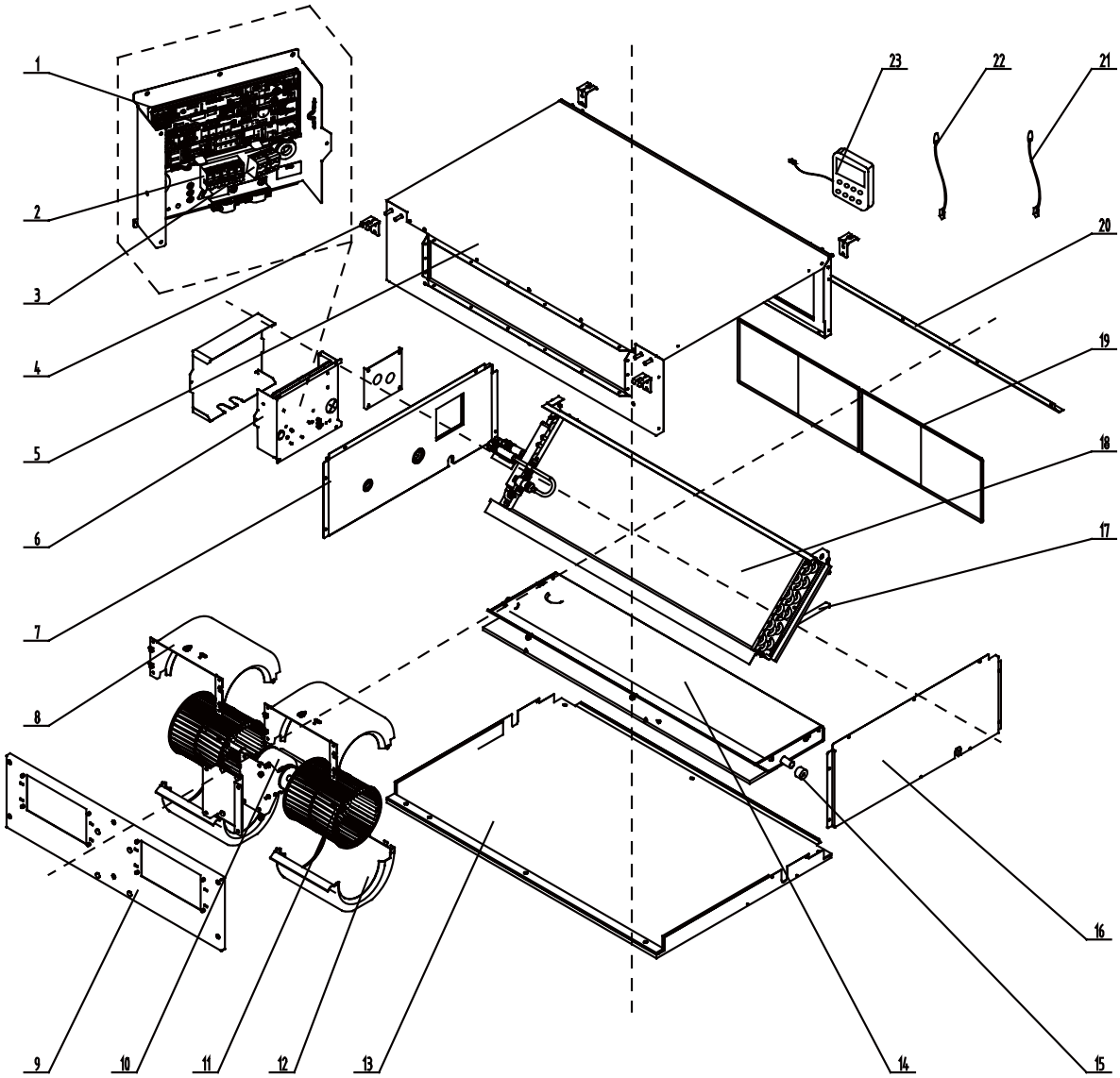

## MUCR-36-H3
UI20866

| Nº | Descripción | Ud. | Ref. Proveedor | Código |
|---|---|---|---|---|
| 1 | Main Board (Placa electrónica) | 1 | 30224000030 | CL98363 |
| 2 | Terminal Board | 1 | 42010194 | |
| 3 | Terminal Board | 1 | 4201025301 | |
| 4 | Hook | 4 | 02112466 | |
| 5 | Top Cover Board Assy | 1 | 01265200086 | |
| 6 | Electric Box Assy (Conjunto eléctrico) | 1 | 01395200212 | CL98310 |
| 7 | Right Side Plate Sub-Assy | 1 | 01315200061 | |
| 8 | Volute Casing (Upper) | 2 | 26904100051 | |
| 9 | Blower Mounting Plate Sub-Assy | 1 | 01325200044 | |
| 10 | Brushless DC Motor (Motor ventilador) | 1 | 15709400006 | CL98353 |
| 11 | Centrifugal Fan Blade (Ventilador centrifugo) | 1 | 10424100001 | CL98330 |
| 12 | Volute Casing (Lower) | 2 | 26904100052 | |
| 13 | Bottom Cover | 1 | 15265301 | |
| 14 | Water Tray Components | 1 | 01285323 | |
| 15 | Choke Plug of Drain Pipe | 1 | 76712455 | |
| 16 | Left Side Plate | 1 | 01315306 | |
| 17 | Evaporator Support Plate | 1 | 018953022 | |
| 18 | Evaporator Assy | 1 | 01025200052 | |
| 19 | Filter Sub-Assy | 2 | 111253031 | |
| 20 | Side Plate of Air intake | 1 | 01375301 | |
| 21 | Temperature Sensor (Sensor temperatura tubería) | 1 | 390001921G | CL98379 |
| 22 | Ambient Temperature Sensor (Sensor temperatura ambiente) | 1 | 3900012123 | CL96708 |
| 23 | Display Board (Placa display) | 1 | 30294000007 | CL98370 |
| | Filter | 2 | 111200515 | |
| | Filter | 2 | 11125304 | |

## MUCR-42-H3
UI20867

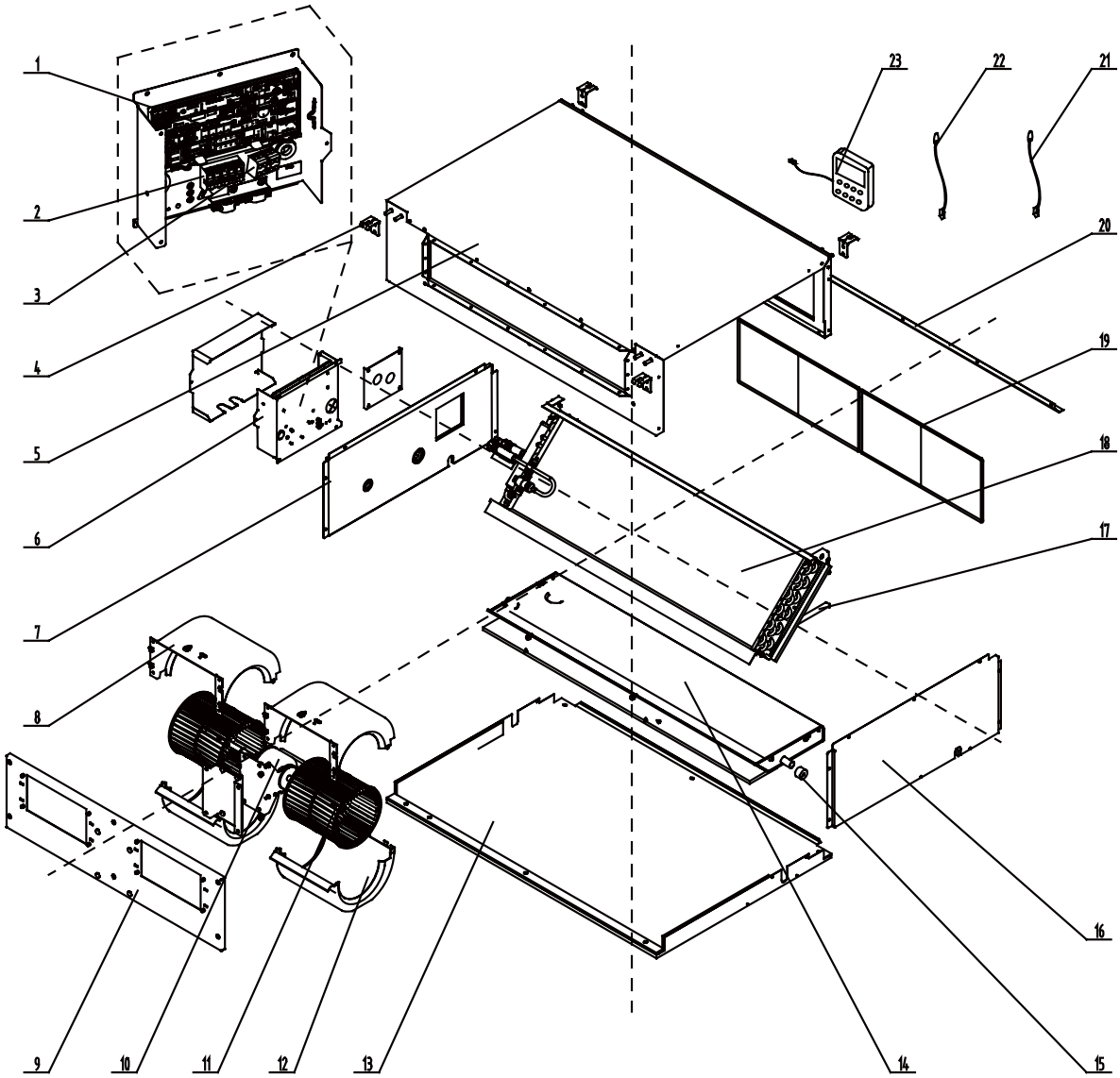

## MUCR-42-H3
UI20867

| Nº | Descripción | Ud. | Ref. Proveedor | Código |
|---|---|---|---|---|
| 1 | Main Board (Placa electrónica) | 1 | 30224000030 | CL98363 |
| 2 | Terminal Board | 1 | 4201025301 | |
| 3 | Terminal Board | 1 | 42010194 | |
| 4 | Hook | 4 | 02112466 | |
| 5 | Top Cover Board Assy | 1 | 01265200086 | |
| 6 | Electric Box Assy (Conjunto eléctrico) | 1 | 01395200212 | CL98310 |
| 7 | Right Side Plate Sub-Assy | 1 | 01315200061 | |
| 8 | Propeller Housing(Upper) | 2 | 26904100051 | |
| 9 | Blower  Mounting Plate Sub-Assy | 1 | 01325200044 | |
| 10 | Brushless DC Motor (Motor ventilador) | 1 | 15709400006 | CL98353 |
| 11 | Centrifugal Fan Blade (Ventilador centrifugo) | 2 | 10424100001 | CL98330 |
| 12 | Propeller Housing(Lower) | 2 | 26904100052 | |
| 13 | Bottom Cover | 1 | 15265301 | |
| 14 | Water Tray Components | 1 | 01285323 | |
| 15 | Choke Plug of Drain Pipe | 1 | 76712455 | |
| 16 | Left Side Plate | 1 | 01315306 | |
| 17 | Evaporator Support Plate | 1 | 018953022 | |
| 18 | Evaporator Assy | 1 | 01025200052 | |
| 19 | Filter Sub-Assy | 2 | 111253031 | |
| 20 | Side Plate of Air intake | 1 | 01375301 | |
| 21 | Temperature Sensor (Sensor temperatura tubería) | 1 | 390001921G | CL98379 |
| 22 | Ambient Temperature Sensor (Sensor temperatura ambiente) | 1 | 3900012123 | CL96708 |
| 23 | Display Board (Placa display) | 1 | 30294000007 | CL98370 |

## MUCR-48-H3
UI20868

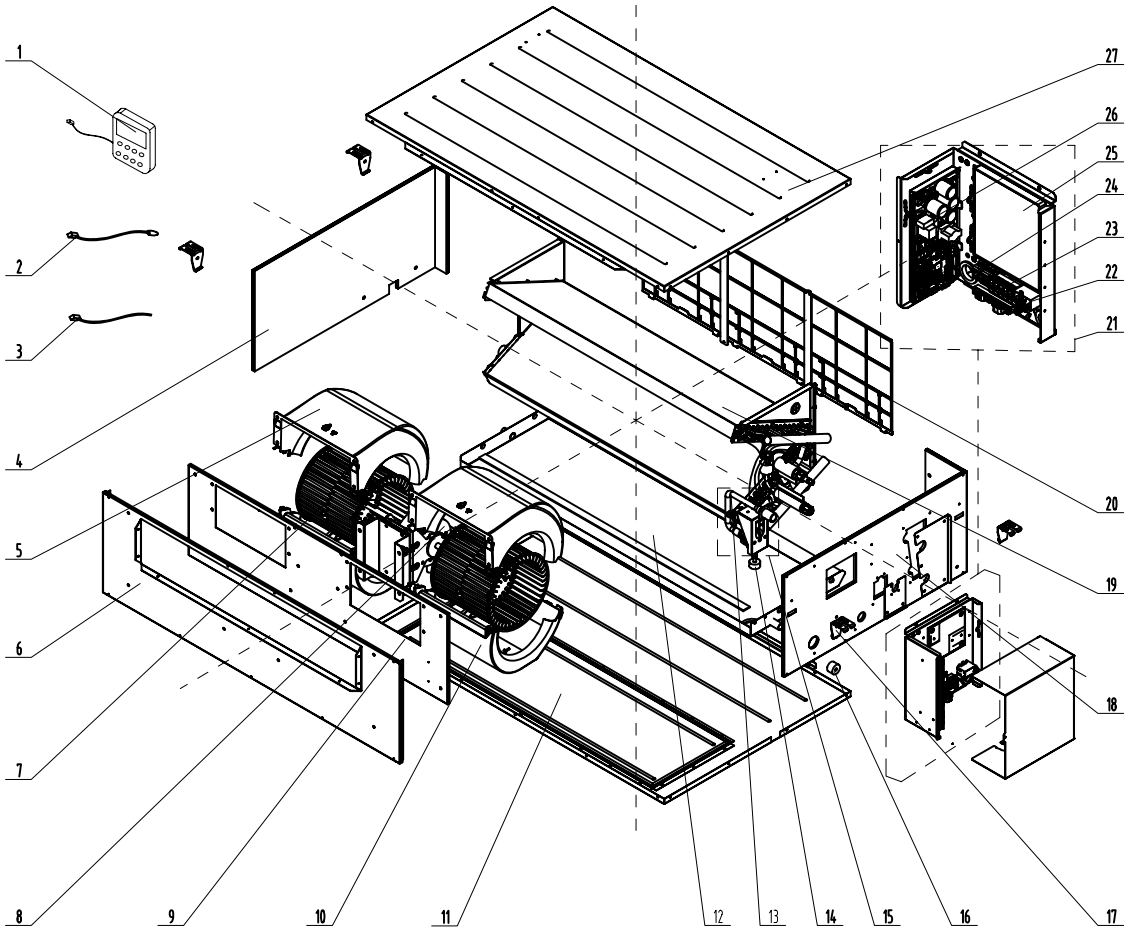

## MUCR-48-H3
UI20868

| Nº | Descripción | Ud. | Ref. Proveedor | Código |
|---|---|---|---|---|
| 1 | Display Board (Placa display) | 1 | 30294000007 | CL98370 |
| 2 | Ambient Temperature Sensor (Sensor temperatura ambiente) | 1 | 3900012121 | CL98373 |
| 3 | Temperature Sensor (Sensor temperatura tubería) | 1 | 390001913 | CL98378 |
| 4 | Left Side Plate Sub-Assy | 1 | 01315200064 | |
| 5 | Propeller Housing(Upper) | 2 | 26905200010 | |
| 6 | Front Side Plate | 1 | 01315200080 | |
| 7 | Centrifugal Fan (Ventilador centrifugo) | 2 | 10425200002 | CL98332 |
| 8 | Brushless DC Motor (Motor ventilador) | 1 | 15709400008 | CL98354 |
| 9 | Blower  Mounting Plate Sub-Assy | 1 | 01325200057 | |
| 10 | Propeller Housing(Lower) | 2 | 26905200011 | |
| 11 | Top Cover Board Assy | 1 | 01265200045 | |
| 12 | Water Tray Assy | 1 | 01285200025 | |
| 13 | Drain Pipe for Water Pump | 1 | 05235301 | |
| 14 | Water Level Switch (Interruptor de nivel) | 1 | 450127011 | CL98390 |
| 15 | Water Pump Assy (Conjunto bomba de condensados) | 1 | 15405200045 | CL98339 |
| 16 | Choke Plug of Drain Pipe | 2 | 76712455 | |
| 17 | Hook | 4 | 02205209 | |
| 18 | Right Side Plate Sub-Assy | 1 | 01315200078 | |
| 19 | Evaporator Assy | 1 | 01025200055 | |
| 20 | Filter Sub-Assy | 3 | 11122059 | |
| 21 | Electric Box Assy | 1 | 01395200259 | |
| 22 | Cold Plasmadevice Sub-Assy | 1 | 11140007 | |
| 23 | Terminal Board | 1 | 42010194 | |
| 24 | Terminal Board | 1 | 4201025301 | |
| 25 | Main Board (AP1) | 1 | 30224000039 | CL98368 |
| 26 | Fan Board (AP3) | 1 | 30221000011 | CL98358 |
| 27 | Bottom Cover Plate Assy | 1 | 01265200081 | |

## MUCR-60-H3
UI20869

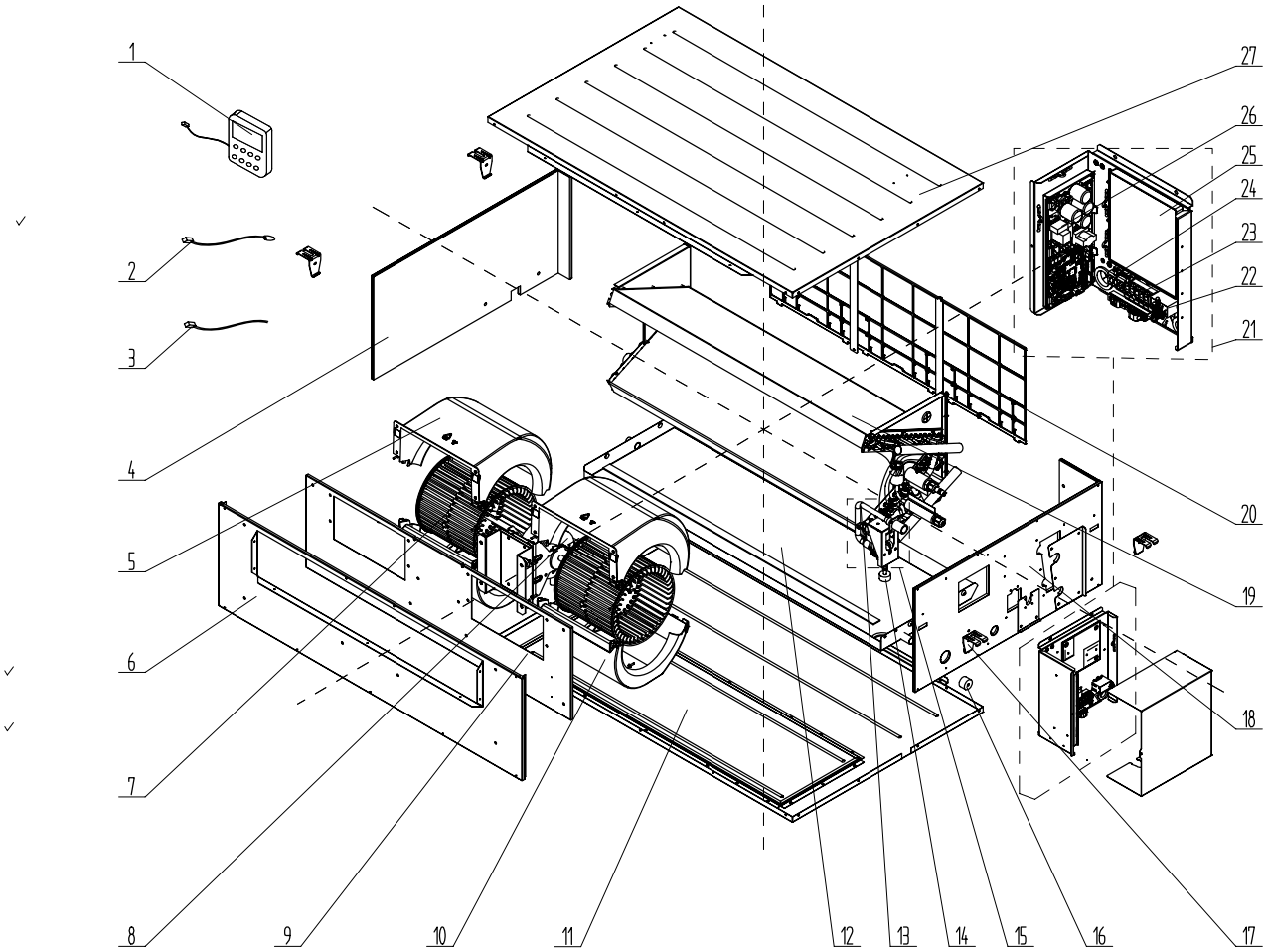

## MUCR-60-H3
UI20869

| Nº | Descripción | Ud. | Ref. Proveedor | Código |
|---|---|---|---|---|
| 1 | Display Board | 1 | 30294000007_K96109 | |
| 2 | Temperature Sensor (Sensor temperatura tubería) | 1 | 3900012128 | CL98375 |
| 3 | Ambient Temperature Sensor (Sensor temperatura ambiente) | 1 | 3900012123 | CL96708 |
| 4 | Left Side Plate Sub-Assy | 1 | 01315200064 | |
| 5 | Propeller Housing(Upper) | 2 | 26905200010 | |
| 6 | Front Side Plate | 1 | 01315200080 | |
| 7 | Centrifugal Fan (Ventilador centrifugo) | 2 | 10425200002 | CL98332 |
| 8 | Brushless DC Motor (Motor ventilador) | 1 | 15709400008 | CL98354 |
| 9 | Blower  Mounting Plate Sub-Assy | 1 | 01325200057 | |
| 10 | Propeller Housing(Lower) | 2 | 26905200011 | |
| 11 | Top Cover Board Assy | 1 | 01265200045 | |
| 12 | Water Tray Assy | 1 | 01285200025 | |
| 13 | Drain Pipe for Water Pump | 1 | 05235301 | |
| 14 | Water Level Switch (Interruptor de nivel) | 1 | 450127011 | CL98390 |
| 15 | Water Pump Assy (Conjunto bomba de condensados) | 1 | 15405200045 | CL98339 |
| 16 | Choke Plug of Drain Pipe | 1 | 76712455 | |
| 17 | Hook | 4 | 02205209 | |
| 18 | Right Side Plate Sub-Assy | 1 | 01315200078 | |
| 19 | Evaporator Assy | 1 | 0102520005401 | |
| 20 | Filter Sub-Assy | 2 | 111253036 | |
| 21 | Electric Box Assy | 1 | 01395200363_K96109 | |
| 22 | Cold Plasma Device Sub-Assy？ | 0 | none | |
| 23 | Terminal Board | 1 | 42010194 | |
| 24 | Terminal Board | 1 | 4201025301 | |
| 25 | Main Board (AP1) | 1 | 30224000039 | CL98368 |
| 26 | Fan Board (AP3) | 1 | 30221000011 | CL98358 |
| 27 | Bottom Cover Plate Assy | 1 | 01265200081 | |

# CONDUCTO H5

## Despiece

# MUCR-H5

**MUCR-18-H5**
**UI20781**

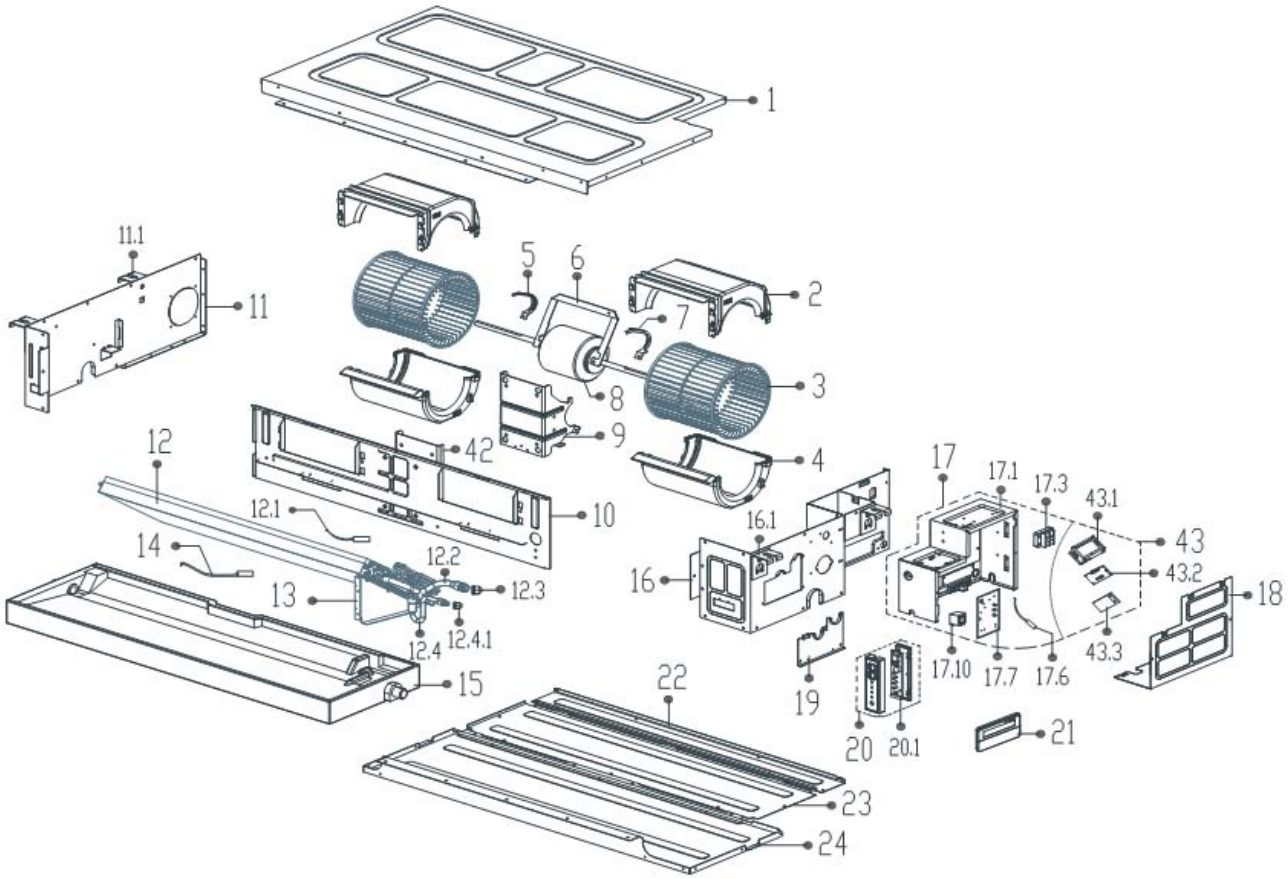

## MUCR-18-H5
UI20781

| Nº | Description | Qty | Supplier Code | Code |
|---|---|---|---|---|
| 1 | Chassis Assembly | 1.0 | 12223000000515 | |
| 2 | Upper Volute | 2.0 | 12123000000024 | |
| 3 | Centrifugal Fan | 2.0 | 12100103000079 | CL92686 |
| 4 | Lower Volute | 2.0 | 12123000000022 | |
| 5 | Left Gland of Motor Bush | 1.0 | 12222500000253 | |
| 6 | Motor Boarding | 1.0 | 12223000000537 | |
| 7 | Right Gland of Motor Bush | 1.0 | 12222500000255 | |
| 8 | Brushless DC Motor (ZKFN-90-8-1) | 1.0 | 11002015000344 | CL94217 |
| 9 | Fan Motor Holder | 1.0 | 12223000000559 | |
| 10 | Components of middle beam | 1.0 | 12223000000233 | |
| 11 | Left panel Subassembly | 1.0 | 12223000000122 | |
| 11.1 | Installation Hanger | 2.0 | 12223000000418 | |
| 12 | Evaporator assembly Gas valve assembly | 1.0 | 15823000000057 | |
| 12.1 | Pipe Temperature Sensor | 1.0 | 11201007000136 | CL92576 |
| 12.2 | Outlet Pipes of Evaporator | 1.0 | 15123000000309 | |
| 12.3 | Brass Nut | 1.0 | 15500406000012 | |
| 12.4 | Input pipes of Evaporator assemblyJoint board of Evaporator | 1.0 | 15123000000402 | |
| 12.4.1 | Brass Nut | 1.0 | 15500406000016 | |
| 13 | Right Supporting Plate Subassembly of Evaporator | 1.0 | 12223000000291 | |
| 14 | Pipe Temperature Sensor | 1.0 | 11201007000266 | CL94225 |
| 15 | Water receiver assembly | 1.0 | 12823000000001 | |
| 16 | Parts fn Right Side Plate | 1.0 | 12223000000079 | |
| 16.1 | Installation Hanger | 2.0 | 12223000000418 | |
| 17 | E-Parts Box assembly | 1.0 | 17223000000218 | |
| 17.1 | Welding Parts of Electrical Control Box | 1.0 | 12223000000046 | |
| 17.3 | Wire holder | 1.0 | 17400401000026 | |
| 17.6 | Room Temperature Sensor (T1) | 1.0 | 11201007000073 | CL92689 |
| 17.7 | Indoor Main Control Board Subassembly (Tie-in, RoHS) | 1.0 | 17123000000162 | CL94244 |
| 17.10 | Reactor | 1.0 | 17400306000070 | |
| 18 | Electrical Control Box Cover | 1.0 | 12223000000060 | |
| 19 | Pressing Plate Subassembly of Tube(RoHS) | 1.0 | 12223000000524 | |
| 20 | Display box assembly | 1.0 | 17223000000003 | CL92384 |
| 20.1 | Display board assembly | 1.0 | 17123000000096 | |
| 21 | Wire Controller (KJR-12B/DP(T)-E-2) | 1.0 | | CL92905 |
| 22 | Rear Transverse Beam | 1.0 | 12223000000263 | |
| 23 | Rear Cover Plate | 1.0 | 12223000000217 | |
| 24 | Top Cover Subassembly | 1.0 | 12223000000199 | |
| 42 | Motor Installing Foundation Subassembly | 1.0 | 12223000000547 | |
| 43 | Electrical Control Box Subassembly | 1.0 | 17222700000162 | |
| 43.1 | Electrical Control Box | 1.0 | 12223000000052 | |
| 43.2 | Inverter Module Subassembly (Sticker) (DC FAN) | 1.0 | 17122000008498 | CL94235 |
| 43.3 | Radiator | 1.0 | 11203803000154 | |
| | Flange | 1.0 | 12223000000462 | |
| | Filter | 1 | 12100204000001 | |
| | Drain pipe connector | 1 | 12100510000021 | |
| | Drain pipe | 1 | 12623000000003 | |
| | Water level sensor | 1 | 11201005000006 | CL92920 |
| | Drain pump | 1 | 17400802000021 | CL94253 |

**MUCR-24-H5**
**UI20782**

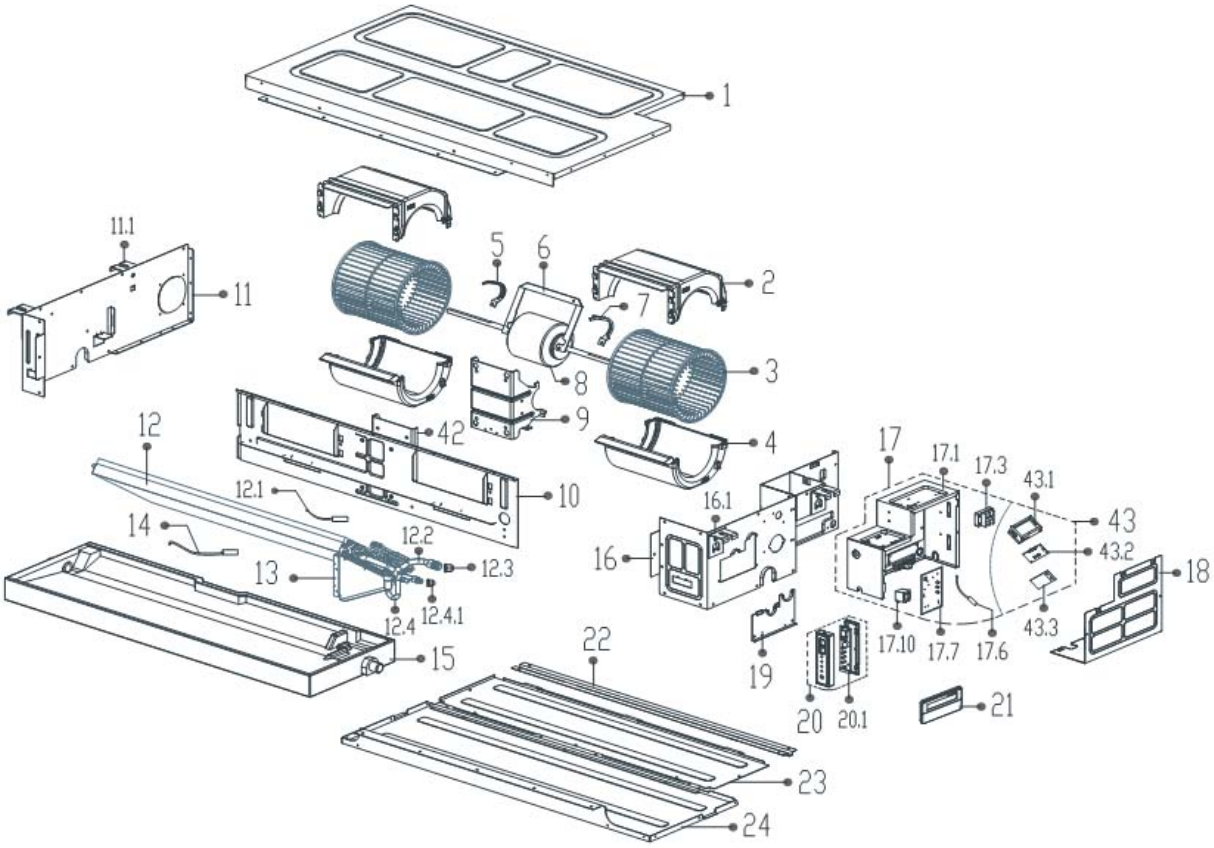

## MUCR-24-H5
UI20782

| Nº | Description | Qty | Supplier Code | Code |
|---|---|---|---|---|
| 1 | Chassis Assembly | 1.0 | 12223000000515 | |
| 2 | Upper Volute | 2.0 | 12123000000024 | |
| 3 | Centrifugal Fan | 2.0 | 12100103000079 | CL92686 |
| 4 | Lower Volute | 2.0 | 12123000000022 | |
| 5 | Left Gland of Motor Bush | 1.0 | 12222500000253 | |
| 6 | Motor Boarding | 1.0 | 12223000000537 | |
| 7 | Right Gland of Motor Bush | 1.0 | 12222500000255 | |
| 8 | Brushless DC Motor (ZKFN-90-8-1) | 1.0 | 11002015000344 | CL94217 |
| 9 | Fan Motor Holder | 1.0 | 12223000000559 | |
| 10 | Components of middle beam | 1.0 | 12223000000233 | |
| 11 | Left panel Subassembly | 1.0 | 12223000000122 | |
| 11.1 | Installation Hanger | 2.0 | 12223000000418 | |
| 12 | Evaporator assembly Gas valve assembly | 1.0 | 15823000000114 | |
| 12.1 | Pipe Temperature Sensor (T2) | 1.0 | 11201007000136 | CL92576 |
| 12.2 | Outlet Pipe Subassembly | 1.0 | 15123000000280 | |
| 12.3 | Brass Nut | 1.0 | 15500406000003 | |
| 12.4 | Inlet Pipe Subassembly | 1.0 | 15123000000340 | |
| 12.4.1 | Brass Nut | 1.0 | 15500406000010 | |
| 13 | Right Supporting Plate Subassembly of Evaporator | 1.0 | 12223000000291 | |
| 14 | Pipe Temperature Sensor | 1.0 | 11201007000266 | CL94225 |
| 15 | Water receiver assembly | 1.0 | 12823000000001 | |
| 16 | Parts fn Right Side Plate | 1.0 | 12223000000079 | |
| 16.1 | Installation Hanger | 2.0 | 12223000000418 | |
| 17 | E-Parts Box assembly | 1.0 | 17223000000218 | |
| 17.1 | Welding Parts of Electrical Control Box | 1.0 | 12223000000046 | |
| 17.3 | Wire holder | 1.0 | 17400401000026 | |
| 17.6 | Room Temperature Sensor (T1) | 1.0 | 11201007000073 | CL92689 |
| 17.7 | Indoor Main Control Board Subassembly (Tie-in, RoHS) | 1.0 | 17123000000162 | CL94244 |
| 17.10 | Reactor | 1.0 | 17400306000070 | |
| 18 | Electrical Control Box Cover | 1.0 | 12223000000060 | |
| 19 | Pressing Plate Subassembly of Tube(RoHS) | 1.0 | 12223000000524 | |
| 20 | Display box assembly | 1.0 | 17223000000003 | CL92384 |
| 20.1 | Display board assembly | 1.0 | 17123000000096 | |
| 21 | Wire Controller (KJR-12B/DP(T)-E-2) | 1.0 | | CL92905 |
| 22 | Rear Transverse Beam | 1.0 | 12223000000263 | |
| 23 | Rear Cover Plate | 1.0 | 12223000000217 | |
| 24 | Top Cover Subassembly | 1.0 | 12223000000199 | |
| 42 | Motor Installing Foundation Subassembly | 1.0 | 12223000000547 | |
| 43 | Electrical Control Box Subassembly | 1.0 | 17222700000162 | |
| 43.1 | Electrical Control Box | 1.0 | 12223000000052 | |
| 43.2 | Inverter Module Subassembly (Sticker) (DC FAN) | 1.0 | 17122000008498 | CL94235 |
| 43.3 | Radiator | 1.0 | 11203803000154 | |
| | Flange | 1.0 | 12223000000462 | |
| | Filter | 1 | 12100204000001 | |
| | Drain pipe connector | 1 | 12100510000021 | |
| | Drain pipe | 1 | 12623000000003 | |
| | Water level sensor | 1 | 11201005000006 | CL92920 |
| | Drain pump | 1 | 17400802000021 | CL94253 |

## MUCR-18-H5
UE20781

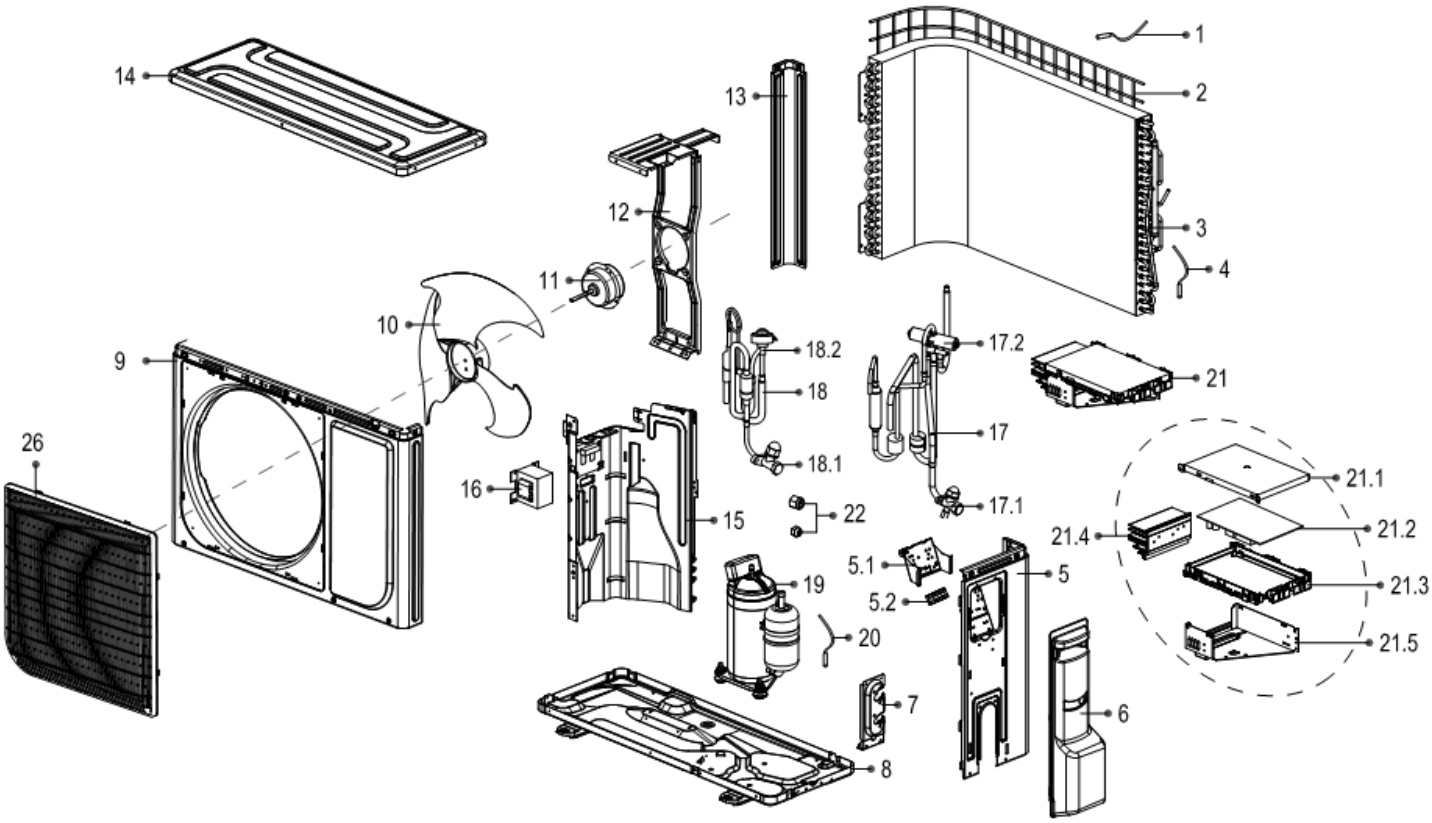

## MUCR-18-H5
UE20781

| Nº | Description | Qty | Supplier Code | Code |
|---|---|---|---|---|
| 1 | Room Temperature Sensor (T4) | 1.0 | 11201007000039 | CL94222 |
| 2 | Rear Net | 1.0 | 12122000007029 | |
| 3 | Condenser Assembly | 1.0 | 15822000001839 | |
| 4 | Pipe Temperature Sensor (T3) | 1.0 | 11201007000136 | CL92576 |
| 5 | Parts fn Right Side Plate | 1.0 | 12222000004002 | |
| 5.1 | Installation board for E-parts | 1.0 | 12222000004003 | |
| 5.2 | Wire holder | 1.0 | 17400401000098 | |
| 5.2 | Wire holder | 1.0 | 17400401000026 | |
| 6 | Protecting cover | 1.0 | 12122000006841 | |
| 7 | Installing plate for valves | 1.0 | 12222000002552 | |
| 8 | Chassis Assembly | 1.0 | 12222000000557 | |
| 9 | Front Panel | 1.0 | 12222000001787 | |
| 10 | Axial fan | 1.0 | 12100105000034 | CL94229 |
| 11 | Brushless DC Motor (ZKFN-40-8-3-1) | 1.0 | 11002015000092 | CL94214 |
| 12 | Fan Motor Holder Subassembly | 1.0 | 12222000002021 | |
| 13 | Left support strip | 1.0 | 12222000001337 | |
| 14 | Top cover assembly | 1.0 | 12222000002422 | |
| 15 | Separation plate | 1.0 | 12222000002219 | |
| 16 | Reactor | 1.0 | 17400306000053 | |
| 17 | Gas Valve Assembly | 1.0 | 15422000002374 | |
| 17.1 | Low Pressure Valve | 1.0 | 15500204000046 | |
| 17.2 | 4-way Valve | 1.0 | 15500216000003 | |
| 18 | High-Voltage valve Assembly | 1.0 | 15422300000076 | |
| 18.1 | High-Voltage valve | 1.0 | 15500208000025 | |
| 18.2 | Electric expansive valve assembly | 1.0 | 15500213000046 | CL94233 |
| 19 | Inverter Controlled Rotary Compressor (ASM135D23UFZ) | 1.0 | 11103020000006 | CL94218 |
| 20 | Discharge temperature sensor assembly (T5) | 1.0 | 11201007000157 | CL92470 |
| 21 | Outdoor E-Parts Box Subassembly | 1.0 | 17222700000210 | |
| 21.1 | Electric Installing Box Cover | 1.0 | 12222000001467 | |
| 21.2 | Subassembly of Outdoor Main Control Board | 1.0 | 17122300000501 | CL94239 |
| 21.3 | Electric Installing Box | 1.0 | 12122000006874 | |
| 21.4 | Radiator | 1.0 | 11203803000276 | |
| 21.5 | Electric Installing Box Subassembly | 1.0 | 12222000001289 | |
| | Display board | 1.0 | 17122300000252 | CL94238 |
| 22 | Brass Nut | 1.0 | 15500406000012 | |
| 22 | Brass Nut | 1.0 | 15500406000016 | |
| 26 | Air Outlet Guard | 1.0 | 12122000006960 | |

**MUCR-24-H5**
**UE20782**

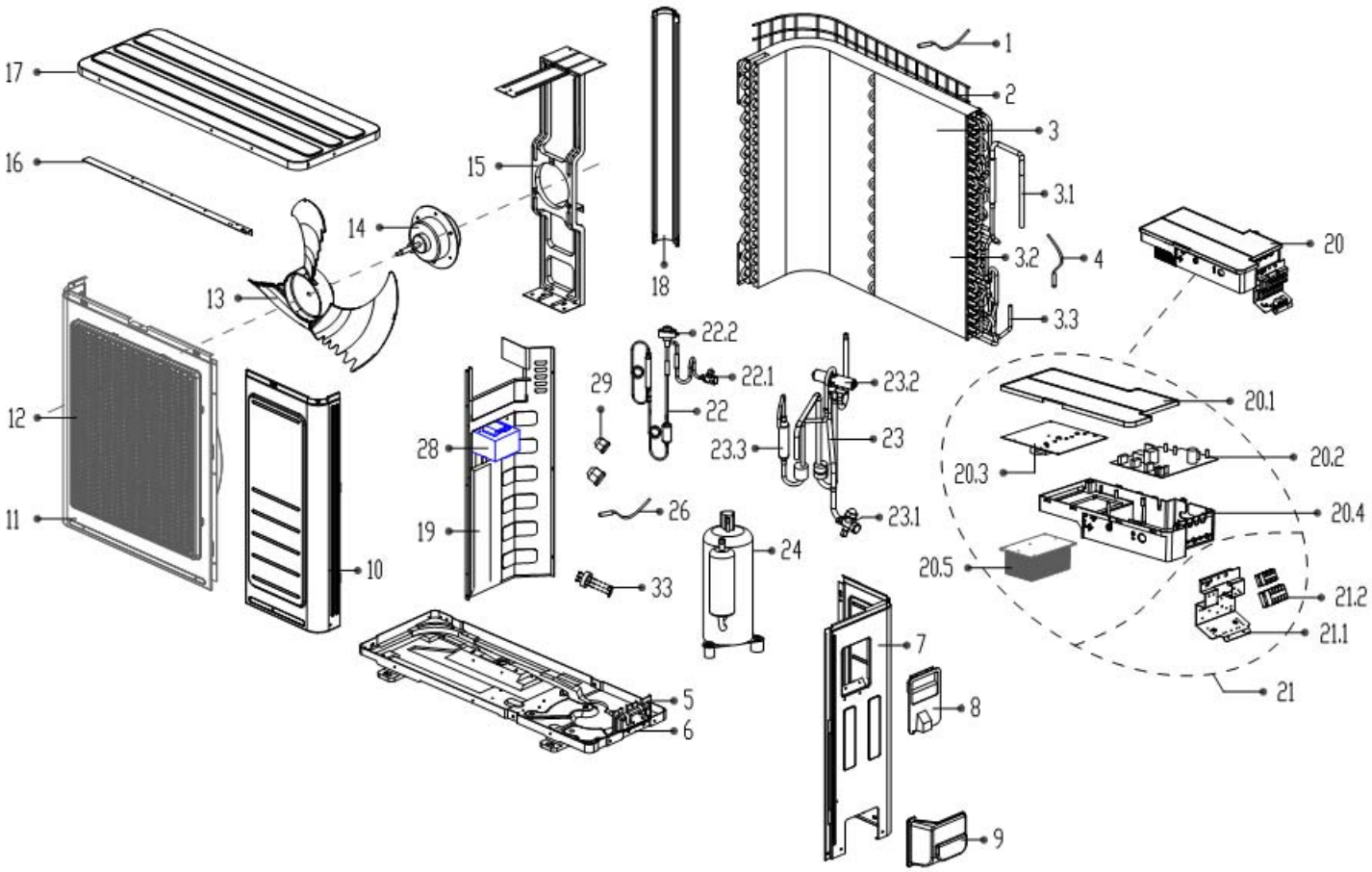

## MUCR-24-H5
UE20782

| Nº | Description | Qty | Supplier Code | Code |
|---|---|---|---|---|
| 1 | Room Temperature Sensor (T4) | 1.0 | 11201007000282 | CL94226 |
| 2 | Rear Net | 1.0 | 12122200002801 | |
| 3 | Condenser Assembly | 1.0 | 15822000002216 | |
| 3.1 | Discharge Pipe Subassembly | 1.0 | 15122000000527 | |
| 3.2 | Condenser | 1.0 | 15822000001162 | |
| 3.3 | Outlet Pipe for Condenser | 1.0 | 15122000000349 | |
| 4 | Pipe Temperature Sensor (T3) | 1.0 | 11201007000006 | CL92472 |
| 5 | Installing plate for valves | 1.0 | 12222000002556 | |
| 6 | Chassis Assembly | 1.0 | 12222000000847 | |
| 7 | Parts of Rear Right Side Plate | 1.0 | 12222000001806 | |
| 8 | Big Handle. | 1.0 | 12100701000072 | |
| 9 | Water Collecting Cover | 1.0 | 12122000007140 | |
| 10 | Front Right Side Plate assembly | 1.0 | 12222200001662 | |
| 11 | Front Panel | 1.0 | 12222200001814 | |
| 12 | Air Outlet Guard | 1.0 | 12122000006989 | |
| 13 | Axial fan | 1.0 | 12100105000001 | CL92584 |
| 14 | Brushless DC Motor (ZKFP-50-8-2) | 1.0 | 11002015000142 | CL92585 |
| 15 | Fan Motor Holder Subassembly | 1.0 | 12222300000144 | |
| 16 | Rear Net plate frame subassembly | 1.0 | 12222200001553 | |
| 17 | Top cover assembly | 1.0 | 12222200001997 | |
| 18 | Left supporting panel | 1.0 | 12222200001875 | |
| 19 | Separator Assembly | 1.0 | 12222300000172 | |
| 20 | Outdoor E-Parts Box Subassembly | 1.0 | 17222300000303 | |
| 20.1 | Electric Installing Box Cover | 1.0 | 12122300000044 | |
| 20.2 | Subassembly of Outdoor Main Control Board | 1.0 | 17122300000527 | CL94242 |
| 20.3 | Outdoor Inverter Module Subassembly | 1.0 | 17122000008512 | CL94236 |
| 20.4 | Installation board for E-parts | 1.0 | 12122300000041 | |
| 20.5 | Radiator | 1.0 | 11203803000085 | |
| 21 | Terminal Block Subassembly of Electrical Control Box | 1.0 | 17222300000155 | |
| 21.1 | Terminal Installing Plate | 1.0 | 12222300000287 | |
| 21.2 | Wire holder | 1.0 | 17400401000098 | |
| 21.2 | Wire holder | 1.0 | 17400401000026 | |
| 21.2 | Wire holder label | 1.0 | 16022000017188 | |
| 22 | High-Voltage valve Assembly | 1.0 | 15423000001064 | |
| 22.1 | High-Voltage valve | 1.0 | 15500208000026 | |
| | Electric expansive valve assembly | 1.0 | 15500213000176 | CL94258 |
| 23 | Gas Valve Assembly | 1.0 | 15422000002414 | |
| 23.1 | Low Pressure Valve | 1.0 | 15500204000003 | |
| 23.2 | 4-way Valve | 1.0 | 15500216000003 | |
| 23.3 | Refrigerant container | 1.0 | 15500508000036 | |
| 24 | Inverter Controlled Rotary Compressor (DA200S2C-10MT) | 1.0 | 11103020000094 | CL94220 |
| 26 | Discharge temperature sensor assembly (T5) | 1.0 | 11201007000246 | CL94224 |
| 28 | Reactor | 1.0 | 17400306000058 | |
| 29 | Brass Nut | 1.0 | 15500406000003 | |
| 29 | Brass Nut | 1.0 | 15500406000010 | |
| 33 | Connection cable assembly of compressor | 1.0 | 17401203000939 | |
| 34 | Expansion valve | 1.0 | 15500213000176 | CL94258 |

MUNDOCLIMA®

**SOLICITE INFORMACIÓN ADICIONAL:**
Teléfono: 93 446 27 80 - Fax: 93 456 90 32
eMail: mundoclima@salvadorescoda.com

**ASISTENCIA TÉCNICA:**
Teléfono: 93 652 53 57 - Fax: 93 635 45 08